LAS VEGAS VALLEY WATER DISTRICT
SECTION I - AUTOCAD STANDARDS

TABLE OF CONTENTS

Introduction and Drawing Submittal Requirements ..... ii-iii

Layer Format for AutoCAD Generated Contract Drawings 1

AutoCAD Text Format For Contracts 2

Black And White Plotter and Linetype Examples 3

Master Layer List 4-6

Legend 7-11

Sample Reference Identification Standard 12

Revision/Addendum Standard 13

Pot Hole Standard 14

File Nomenclature for AutoCAD Generated Contract Drawings 15

INTRODUCTION

The Las Vegas Valley Water District AutoCAD Standards have been developed to aid in the preparation of drawings and to ensure consistency and uniformity on all District contracts. The Engineering Design Division has made every attempt to assure that the Design Detail Standards are complete and accurate. **However, the issuance of these standards does not relieve the Engineer of Record from assuring that the standard details are correct and applicable to their specific project.**

DRAWING SUBMITTAL REQUIREMENTS

General Submittal Requirements:

When AutoCAD files are prepared for submittal to the District, the paper set and electronic views must be the same. What is seen on the paper copy is also the electronic view on screen when the file is opened.

The Consultant shall use the drawing shell, *Contract-shell.dwg*, for all contract drawing sheet titleblocks. The shell is located in the *General* section of the LVVWD AutoCAD Standards. Due to the District's document management system the *Contract-shell.dwg* **shall not be exploded**. If the titleblock has been exploded or modified the submittal will be **not** be accepted.

Due to the District's printing requirements Model Space and Paper/Layout Space drawings are **only** permitted. The drawing shell shall **always** be inserted into Paper/Layout Space at (1:1 scale) 24" x 36" and drawing "psltscale" to be set at "1". The Model Space viewport drawing scale shall be horizontal scale: 1" = 40' and vertical scale: 1" = 4' for plan and profiles. The Consultant and District Engineer shall determine all other drawing scales.

North arrow and all text are to be oriented to be read from the **bottom** and **right** (Unless approved by District Engineer).

All Stationing is to be oriented from left to right (Unless approved by District Engineer). Stations are to be consistent at matchlines and station equations are **not** permitted.

All original signatures are to be in **blue** ink prior to the acceptance of the Final Submittal. Within the titleblock the "Recommended By:" and "Accepted By:" signature lines are **only** for District final approval signatures.

AutoCAD drawings created in AutoCAD version 2004 or greater will **only** be accepted.

The District distributes an electronic PDF version of the submittal drawings to various LVVWD departments for review throughout the project with an LVVWD automated program. Requirements for this automated process include:

- **All** submittal drawings need to have **all X-ref drawings bound** within the drawings using the "insert" feature.
- **All** drawings are to have **only one (1) layout tab.** (Multiple tab drawings can no longer be accepted).
- **All** drawings are to use the standard LVVWD titleblock (Contract-shell.dwg).
- **All** drawing files are to be named in accordance with the LVVWD AutoCAD Standards.

If **any** of the District submittal requirements are not followed the submittal **cannot** be processed and will be **not** be accepted. The submittal will be returned to the Consultant for correction and immediate re-submittal as determined by District Engineer.

Failure to comply with these requirements and standards may lead to reduction or delay of project payments as determined by District.

DRAWING SUBMITTAL REQUIREMENTS CONTINUED

60% Submittal Requirements:

- Detail file names and dates are to remain by detail titles to verify the Standard Detail version used.

100% and Final Submittal Requirements:

- All drawing files and plan & profile match lines shall be trimmed on each sheet.
- All layers are to be turned on and thawed (Exception: "mview" to be frozen).
- All information **not** pertinent to the final design must be deleted from the drawings and purged to smallest possible size.
- Detail file names and dates are to be removed from detail titles.

Any LVVWD AutoCAD Standards revisions or updates made prior to the 100% Submittal will be required to be incorporated into the contract drawings prior to the acceptance of the Final Submittal.

Revisions or Addendums:

- All changes are to be clouded in AutoCAD (provide AutoCAD drawing files with all changes).
- The "Original was stamped by" note as shown in the standards is to be placed near the original stamp location.
- Numbered revision triangles will be placed within the clouded areas and in the drawing titleblock revision area.
- Detailed description of the changes shall also be provided in the revision area of the titleblock.

LAYER FORMAT FOR AUTOCAD GENERATED CONTRACT DRAWINGS

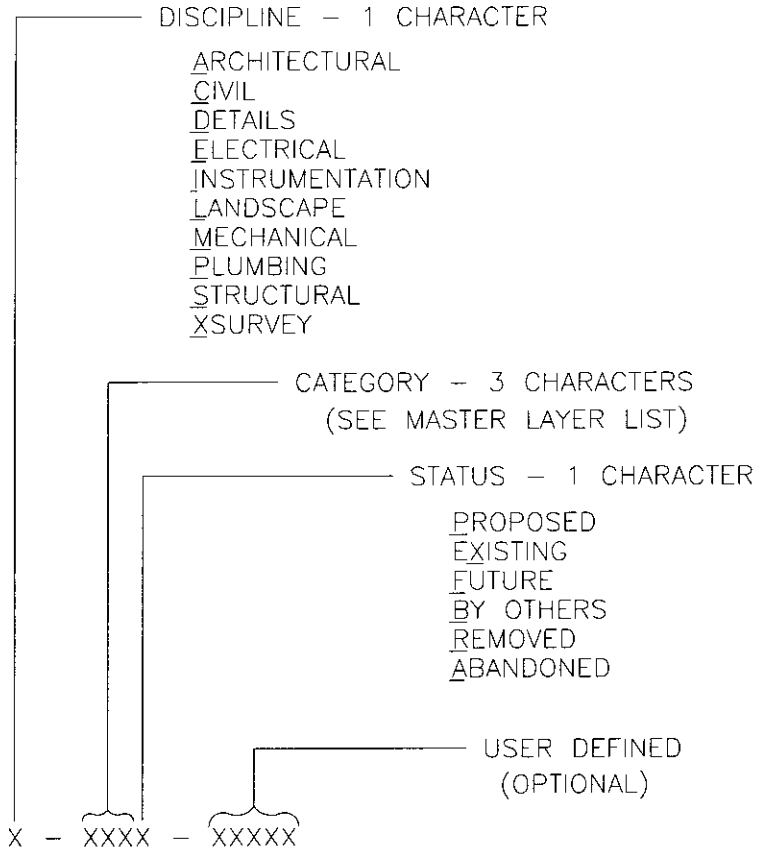

EXAMPLES:	C–RDSP–EAST	(CIVIL–ROADS PROPOSED–EAST ROAD)
	C–WTRX–36IN	(CIVIL–WATER EXISTING–36 INCH WATER LINE)
	L–LANP–ROCK	(LANDSCAPE–LANDSCAPE PROPOSED–ROCKS)
	TEXT1–SURVEY	(TEXT1–SURVEY TEXT LAYER)

AUTOCAD TEXT FORMAT FOR CONTRACTS

STYLE: TEXT1

FONT: ROMANS.SHX

SIZE: 0.10 x DRAWING SCALE

WIDTH: 1 OBLIQUING ANGLE: 0

LAYER: TEXT1

USAGE: ALL OTHER TEXT, DIMENSIONING, LEADERS, ARROWS AND NOTES.

EXAMPLE: 10'-0", (TYP), STA. 10+00.00

ALL TEXT IS TO BE UPPER CASE, UNLESS APPROVED OTHERWISE BY DISTRICT ENGINEER.

STYLE: TEXT2

FONT: BOLD.SHX

SIZE: 0.24 x DRAWING SCALE

WIDTH: 1 OBLIQUING ANGLE: 0

LAYER: TEXT2

USAGE: STREET NAMES

EXAMPLE: **RANCHO DRIVE**

ALL TEXT IS TO BE UPPER CASE, UNLESS APPROVED OTHERWISE BY DISTRICT ENGINEER.

STYLE: TEXT3

FONT: BOLD.SHX

SIZE: 0.20 x DRAWING SCALE

WIDTH: 1 OBLIQUING ANGLE: 0

LAYER: TEXT3

USAGE: DETAIL AND DRAWING TITLES

EXAMPLE: **SITE PLAN, BLOW-OFF DETAIL**

ALL TEXT IS TO BE UPPER CASE, UNLESS APPROVED OTHERWISE BY DISTRICT ENGINEER.

STYLE: TEXT4

FONT: ROMANS.SHX

SIZE: 0.15 x DRAWING SCALE

WIDTH: 1 OBLIQUING ANGLE: 0

LAYER: TEXT4

USAGE: MATCHLINES, PROFILE GRID STA. AND ELEV., INTERMEDIATE DETAIL TITLES

EXAMPLE: DETAIL "C", TRENCH SECTIONS

ALL TEXT IS TO BE UPPER CASE, UNLESS APPROVED OTHERWISE BY DISTRICT ENGINEER.

BLACK AND WHITE
PLOTTER PEN EXAMPLES

PEN NUMBER	COLOR	INCHES
1	RED	0.005
2	YELLOW	0.008
3	GREEN	0.012
4	CYAN	0.018
5	BLUE	0.028
6	MAGENTA	0.038
7	WHITE	0.050
252	GREY	0.010

NOTE: COLOR #252 IS TO BE USED FOR CONTOURS AND EXIST. PROFILE GRADES ONLY. OTHER USES AND PEN WIDTHS OF COLOR #252 SHALL BE DETERMINED AND APPROVED BY DISTRICT ENGINEER.

LINETYPES

DESCRIPTION	LINETYPE
CENTER	
CONTINUOUS	
DASHED	
DASHEDX2	
HIDDEN	
HIDDEN2	
PHANTOM	
PHANTOM2	
DOT2	

NOTE: WHEN IN MODEL SPACE LTSCALE WILL ALWAYS BE 0.5 x DRAWING SCALE.

WHEN IN PAPER/LAYOUT SPACE THE PSLTSCALE IS TO BE TOGGLED TO 1.

MASTER LAYER LIST

LAYER PREFIX GROUPING	STATUS SUFFIX BY PEN COLOR								LINETYPE BY STATUS (● INDICATES ONE LINETYPE FOR ALL STATUS SUFFIXES)																								DESCRIPTION
	DEFAULT COLOR (FOR ALL)	P PROPOSED	X EXISTING	F FUTURE	B BY OTHERS	R REMOVED	A ABANDONED		CENTER		CONTINUOUS		DASHED		DASHEDX2		HIDDEN		HIDDEN2		PHANTOM		PHANTOM2		DOT2						CREATED – SEE LEGEND	
0	7											●																					MISCELLANEOUS LAYER
C–WAL	2																															●	BLOCKWALL OR FENCE
* CITYVIEW																																	CITY LOCATION MAP MVIEW FOR DISTRICT USE
* CORNERS																																	INTERIOR BORDER OF TITLE BLOCK
C–BLD		2	1	–	–	–	–					P					X																BUILDING
C–CEN	1									●																							CENTERLINES
C–CON		3	252	–	–	–	–					P					X																CONTOURS, PROFILE GRADES
C–DIT	2															●																●	DITCHES, WASHES AND TRENCHES
C–EAS	3																	●															EASEMENTS
C–GRID–1	4																									●							INTERMEDIATE PROFILE LINES PER EXAMPLE
C–GRID–2	3											●																					PROFILE BORDER LINES PER EXAMPLE
C–PRL	2											●																					PROPERTY LINES
C–RDS	2										P,F	B	X	R,A																			ALL SIDEWALK, CURB & GUTTER,
																																	DRIVEWAYS, AND ROADS
C–ROW	4																					●											RIGHT–OF–WAY
C–SEC	3																							●									SECTION LINES
C–SGN	1											●																					SIGNS
C–SLT	2																															●	STREET LIGHT
C–UTL	1															●																	UTILITIES
C–WTR		3,6	3	1	3	1	1				P	B	X	R,A			F																16" AND SMALLER (6), SIZES ABOVE 16" (3)
E–AGO		3	2	1	2	2	2					●																					ABOVE GROUND ONSITE
E–DET		3	2	1	1	2	2					●																					DETAILS
E–EQP		3	1	1	1	1	1				P	X							F,R	A,B													EQUIPMENT
E–SIT		3	1	1	1	1	1					●																					SITE PLANS
E–GND		3	1	2	–	1	1					●																					GROUNDING
E–UGO		3	1	2	1	1	1					●																					UNDERGROUND ONSITE
HATCH	1											●																					ALL HATCHING
L–LAN	2											●																					ALL LANDSCAPING
* MTOOLS																																	MODEL SPACE

* – REFERENCE LAYER

MASTER LAYER LIST

LAYER PREFIX GROUPING	STATUS SUFFIX BY PEN COLOR									LINETYPE BY STATUS (● INDICATES ONE LINETYPE FOR ALL STATUS SUFFIXES)														DESCRIPTION
	DEFAULT COLOR (FOR ALL)	P PROPOSED	X EXISTING	F FUTURE	B BY OTHERS	R REMOVED	A ABANDONED			CENTER		CONTINUOUS		DASHED		DASHEDX2		HIDDEN		HIDDEN2		PHANTOM		PHANTOM2		DOT2						CREATED - SEE LEGEND	
* MVIEW																										MVIEW
* PLOTDATE																										AUTO FILE NAME, PLOT DATE AND TIME UPDATED
* PTOOLS																										PAPER SPACE
* SHELL																										TITLEBLOCK
* SITE1																										JOB SITE 1 MVIEW FOR DISTRICT USE
* SITE2																										JOB SITE 2 MVIEW FOR DISTRICT USE
TEXT1-X	2																									TEXT, DIMENSIONING, LEADER ARROWS AND NOTES
TEXT2-X	3																									STREET NAMES
TEXT3-X	3																									DETAIL AND DRAWING TITLES (INCLUDING THE DETAIL TITLE UNDERLINE)
TEXT4-X	3																									PROFILE GRID STATIONS, ELEVATIONS AND ALL INTERMEDIATE DETAIL AND TITLEBLOCK TITLES
* WD-BLK																										FOR USE IN LVVWD TITLE BLOCK
* WD-BLU																										FOR USE IN LVVWD TITLE BLOCK
* WD-TEXT																										FOR USE IN LVVWD TITLE BLOCK
* WD-YEL																										FOR USE IN LVVWD TITLE BLOCK

* – REFERENCE LAYER

MASTER LAYER LIST (DETAILS ONLY)

LAYER PREFIX GROUPING	STATUS SUFFIX BY PEN COLOR									LINETYPE BY STATUS (● INDICATES ONE LINETYPE FOR ALL STATUS SUFFIXES)																DESCRIPTION
	DEFAULT COLOR (FOR ALL)	P PROPOSED	X EXISTING	F FUTURE	B BY OTHERS	R REMOVED	A ABANDONED			CENTER		CONTINUOUS		DASHED		DASHEDX2		HIDDEN		HIDDEN2		PHANTOM		PHANTOM2		DOT2		FENCELINE1				CREATED - SEE LEGEND	
D-CEN		1									●																	ALL CENTER LINES
D-CYN		4											●															PROPOSED PIPE LINES
D-GRN		3											●															PROPOSED DETAIL PERTAINING TO TITLE
D-YEL		2																		●								PROPOSED HIDDEN LINES OF DETAIL
D-YEL		2											●															PROPOSED DETAIL
D-YEL			2												●													ALL EXISTING
D-RED	1												●															ALL HARD TO SEE SMALL PARTS SUCH AS BOLTS
D-VLT		3	1	–	–	–	–						●															VAULT
I-EQP		2	1	1									●															FIELD INSTR (w/ PWR)/CONTROL DEVICES
I-SIG		3	2	1											●													SIGNAL LINES
I-COM		2	1	1																						●		SOFTWARE LINK LINES
I-PWR		2	1	1									●															SUPPLY POWER
I-SYMP		2	1	1									●															INSTRUMENT SYMBOLS (RTU, SCADA, PLC, ETC)
M-EQP		3	2	1									●															FIELD INSTR (w/o PWR)/PUMPS, ETC
I-ENC		3	2	1																		●						ENCLOSURE (VFD, LCP, ETC)
E-COMP	3												●															COMPONENTS & SYMBOLS FOR SCHEMATICS
E-EXTW	1																			●								EXTERNAL WIRING FOR SCHEMATICS
E-OUTLN	1																							●				DEVICE OUTLINE FOR SCHEMATICS
E-WIRE	1												●															INTERNAL WIRING FOR SCHEMATICS

∗ – REFERENCE LAYER

LEGEND

GRAPHIC REPRESENTATION		DESCRIPTION	SYMBOL		NOTES
PROPOSED	EXISTING		PROPOSED	EXISTING	
–		CABLE TV		4" CTV	
*	*	FENCE			
–	*	FIBER OPTICS		12" FO	
–	*	GAS		4" G	
–	*	HIGH PRESSURE GAS		12" HPG	
–	*	OVERHEAD POWERLINES		OHP	
–	*	OVERHEAD TELEPHONE LINES		OHT	
*	*	CONTOURS		2640	
*	*	DITCH			SHOW THE DIRECTION OF FLOW
*	*	DRIVEWAY			
*	*	DROP INLET IN CURB AND GUTTER		DI	
*	*	CATCH BASIN IN SIDEWALK		CB	
–	*	RAILROAD			
–	*	SANITARY SEWER		12" SS	
–	*	STORM DRAIN		24" SD	
–	*	UNDERGROUND POWER		UGP	
–	*	UNDERGROUND TELEPHONE		UGT	
*	*	WATER (16" AND SMALLER)	16" DIP	16" DIP	16" AND SMALLER WIDTH TO COLOR (MAGENTA)
		WATER (LARGER THAN 16")	36" MLCP	36" MLCP	LARGER THAN 16" OFFSET TO WIDTH OF PIPE (PIPE – COLOR GREEN W/CENTERLINE SHOWN)
*	*	CURB, GUTTER AND SIDEWALK			
*	*	PROPERTY LINE	PL	PL	
*	*	CENTER LINE	℄	℄	
*	*	BLOCK WALL			PROPOSED: 2 CONTINUOUS LINES, DASHED PLINE W/WIDTH BETWEEN THE 2 CONTINUOUS LINES. EXISTING: 2 CONTINUOUS LINES WITH DOT LINETYPE IN CENTER BETWEEN THE CONTINUOUS LINES, POLYLINE WIDTH OF 0.05.

NOTES:

* THIS IS NOT A FILE NOR DOES IT HAVE A FILENAME, LEGEND SHEET ONLY.

1. FOR LAYERING CONVENTIONS, SEE MASTER LAYER LIST.
2. SCALE LINETYPES APPROPRIATELY PER DRAWING.

LEGEND

GRAPHIC REPRESENTATION		DESCRIPTION	SYMBOL		NOTES
PROPOSED	EXISTING		PROPOSED	EXISTING	
*	*	WELD SYMBOLS	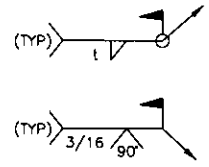		SEE AMERICAN WELDING SOCIETY CHART FOR SYMBOLS AND EXPLANATION.
*	*	RELOCATION OF WATER METER	3/4"		
*	*	REPLACEMENT OF WATER SERVICE ASSEMBLY	3/4"		
*	*	POTHOLE SYMBOL	2		

NOTES:

* THIS IS NOT A FILE NOR DOES IT HAVE A FILENAME, LEGEND SHEET ONLY.

1. FOR LAYERING CONVENTIONS, SEE MASTER LAYER LIST.
2. SCALE LINETYPES APPROPRIATELY PER DRAWING.

LEGEND

FILENAME		DESCRIPTION	SYMBOL		NOTES
PROPOSED	EXISTING		PROPOSED	EXISTING	
ARROW	*	STANDARD LEADER OR DIMENSION ARROW.			ARROWHEADS FOR LEADERS OR DIMENSIONING SHALL BE THE SAME SIZE AS LAYER "TEXT1" (HEIGHT = 0.10) OR PROPORTIONAL TO DRAWING SCALE.
BLOWOFF	*	BLOW-OFF			
CAP	*	CAP/STUBOUT			
COMBAIR	*	COMBINATION AIR VALVE			
DETARROW	*	DIRECTIONAL ARROW SHELL			PLACE THIS AROUND BLOCK "DETBUBL" AT INTERSECTION POINT SHOWN. USE FOR ALL SECTION CUTS AND ROTATE PER DRAWING.
DETARRW2	*	SECTION ARROW			PLACE THIS IN LINE WITH THE DETAIL BUBBLE AND ROTATE PER SECTION CUT.
DETBUBL	*	REFERENCE BUBBLE	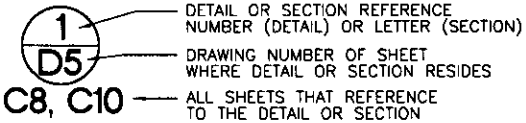		
*	EB	ELECTRIC BOX		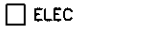	
EOPP	EOPX	EDGE OF PAVING	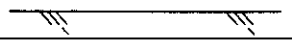	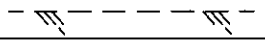	
*	EPB	ELECTRICAL PANEL BOX			
*	FAB	FIRE ALARM BOX			
FHP	FHX	FIRE HYDRANT (ASSEMBLY)			
FISHEYE	*	IDENTIFICATION HEXAGON			IDENTIFY ITEMS SUCH AS PIPELINES, FITTINGS, ELECTRICAL EQUIPMENT, ETC. IN HARD TO LABEL AREAS. CREATE A SCHEDULE TO REFER TO.

NOTES: * THIS IS NOT A FILE NOR DOES IT HAVE A FILENAME, LEGEND SHEET ONLY.

1. FOR LAYERING CONVENTIONS, SEE MASTER LAYER LIST.
2. SCALE LINETYPES APPROPRIATELY PER DRAWING.

LEGEND

FILENAME		DESCRIPTION	SYMBOL		NOTES
PROPOSED	EXISTING		PROPOSED	EXISTING	
–	MH	MANHOLE	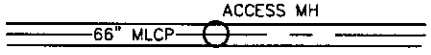		
N–ARROW	*	STANDARD NORTH ARROW	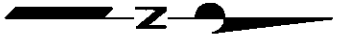		ROTATE AND SCALE PER DRAWING.
PIPEBRKP	PIPEBRKX	PIPE BREAK ELLIPSE			SCALE TO FIT PIPELINE.
PIPETERM	*	CONTINUANCE MARKER			MARKER FOR USE ON SITE PLANS AND DETAILS.
PLOTDATE		PLOTDATE	I:\acadstds\approved\binder\10–mastleg.dwg Plot @ 03/07/01 14:08		
*	PP	POWER POLE W/GUY WIRE			
REDP	REDX	REDUCER		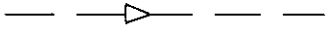	REDUCERS FOR PIPELINES LARGER THAN 16" ARE TO BE DRAWN TO ACTUAL SIZE
*	SCO	SEWER CLEAN OUT BOX			
SHRUB	*	SHRUBS			
STDOT		STANDARD DOT			
*	STLTBX	STREET LIGHT BOX			
STLTP	STLTX	STREET LIGHT			
STRBRK	*	BREAK SYMBOL IN PLAN VIEW OR FOR STRUCTURES.			ROTATE PER DETAIL OR STRUCTURE.

NOTES: * THIS IS NOT A FILE NOR DOES IT HAVE A FILENAME, LEGEND SHEET ONLY.

1. FOR LAYERING CONVENTIONS, SEE MASTER LAYER LIST.
2. SCALE LINETYPES APPROPRIATELY PER DRAWING.

LEGEND

FILENAME		DESCRIPTION	SYMBOL		NOTES
PROPOSED	EXISTING		PROPOSED	EXISTING	
*	SURMON	SURVEY MONUMENT			
TESTSTA	*	TEST STATION			
*	TRANPOLE	TRANSMISSION POLE			
TREE	*	TREES			
*	TSBX	TRAFFIC SIGNAL BOX			
*	TSPOLE	TRAFFIC SIGNAL POLE			
TXTBUBL		TEXT BUBBLE			TEXT BUBBLE TO BE USED TO REFERENCE TO ANOTHER DETAIL OR SECTION LOCATION WITHIN THE PLAN OR DETAIL SHEETS. **EXAMPLE:** BLOW OFF, SEE
VAULTP	VAULTX	VAULT			
WMP	WMX	WATER METER			
WVP	WVX	WATER VALVE	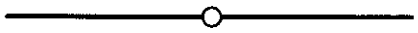	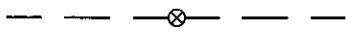	
—	—	WATER SAMPLING STATION			

NOTES:

* THIS IS NOT A FILE NOR DOES IT HAVE A FILENAME, LEGEND SHEET ONLY.

1. FOR LAYERING CONVENTIONS, SEE MASTER LAYER LIST.
2. SCALE LINETYPES APPROPRIATELY PER DRAWING.

SAMPLE REFERENCE IDENTIFICATION STANDARD

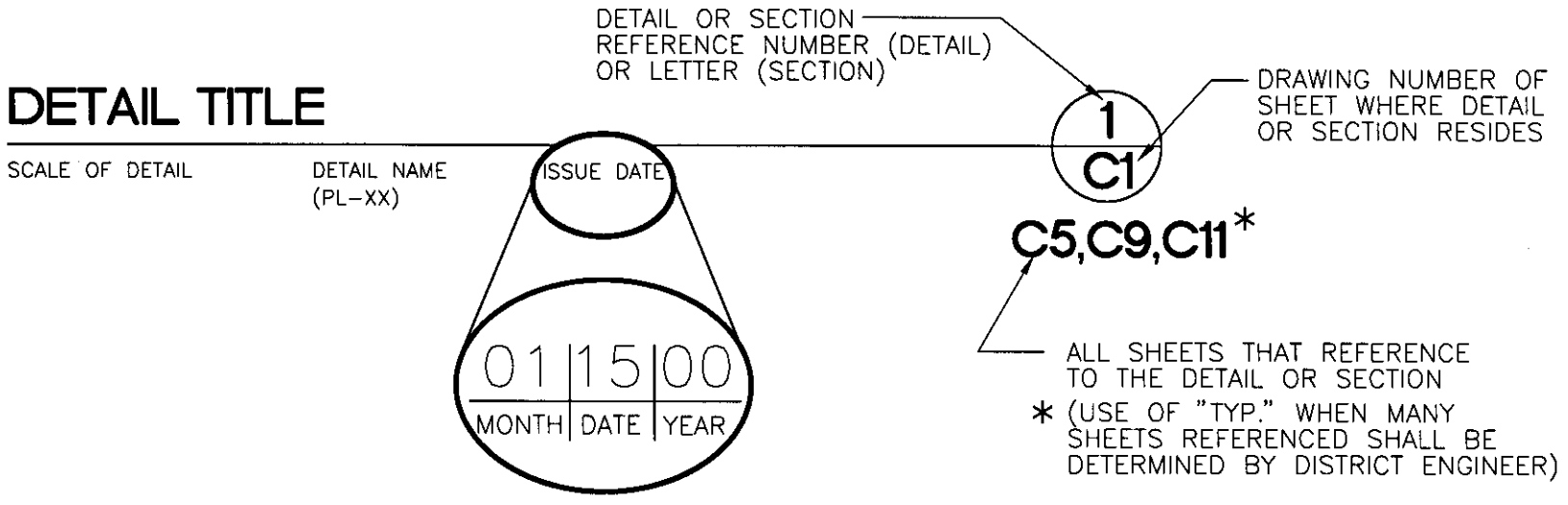

NOTES:

1. DETAIL NAME (PL-XX) AND ISSUE DATE TO BE REMOVED PRIOR TO THE SUBMITTAL OF 100% REVIEW

2. IF DETAIL AND/OR SECTION ARE SHOWN ON SAME DRAWING, DRAWING NUMBER IS TO BE REPLACED BY A DASH

EXAMPLE: 1 / -

REVISION/ADDENDUM STANDARD

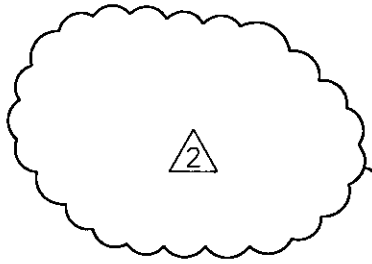

ALL CHANGES TO BE CLOUDED AND REVISION TRIANGLE SYMBOL TO BE PLACED WITHIN THE CLOUDED AREA.

REVISION TRIANGLE NOTE AND DETAILED DESCRIPTION OF CHANGES MADE. THE MOST CURRENT REVISION TO BE NOTED BELOW DRAWING TITLE AND ALL PREVIOUS REVISION NOTES TO BE PLACED IN THE REVISION AREA BY THE STAMP LOCATION.

CREATE NOTE AS SHOWN BELOW STATING THE ENGINEER AND DATE THE ORIGINAL DRAWING WAS SIGNED USING THE STANDARD TEXT1 FONT FORMAT

ORIGINAL CONSTRUCTION DRAWING
WAS SIGNED AND SEALED ON
10/10/99
BY
MICHAEL P. REAGO
UNDER LICENSE NO. 3333

Avoid cutting underground utility lines. It's costly.

Call before you Dig

1-800-227-2600

SHEET-TITLE

DESCRIPTION OF CHANGES

2

DRAWN BY: DESIGNER 1/31/00

CHECKED BY: CHECKER 1/31/00

RECOMMENDED BY: 3333

MICHAEL P. REAGO R.P.E. NO. DATE

ACCEPTED BY: 9651

SHAWN P. MOLLUS R.P.E. NO. DATE

REGISTERED PROFESSIONAL ENGINEER · STATE OF NEVADA
MICHAEL P. REAGO
CIVIL
No. 3333

REVISIONS: 1 DESCRIPTION OF CHANGES

CONTRACT NUMBER

XXX

DRAWING NUMBER C1

SHEET 1 OF 1

POT HOLE STANDARD

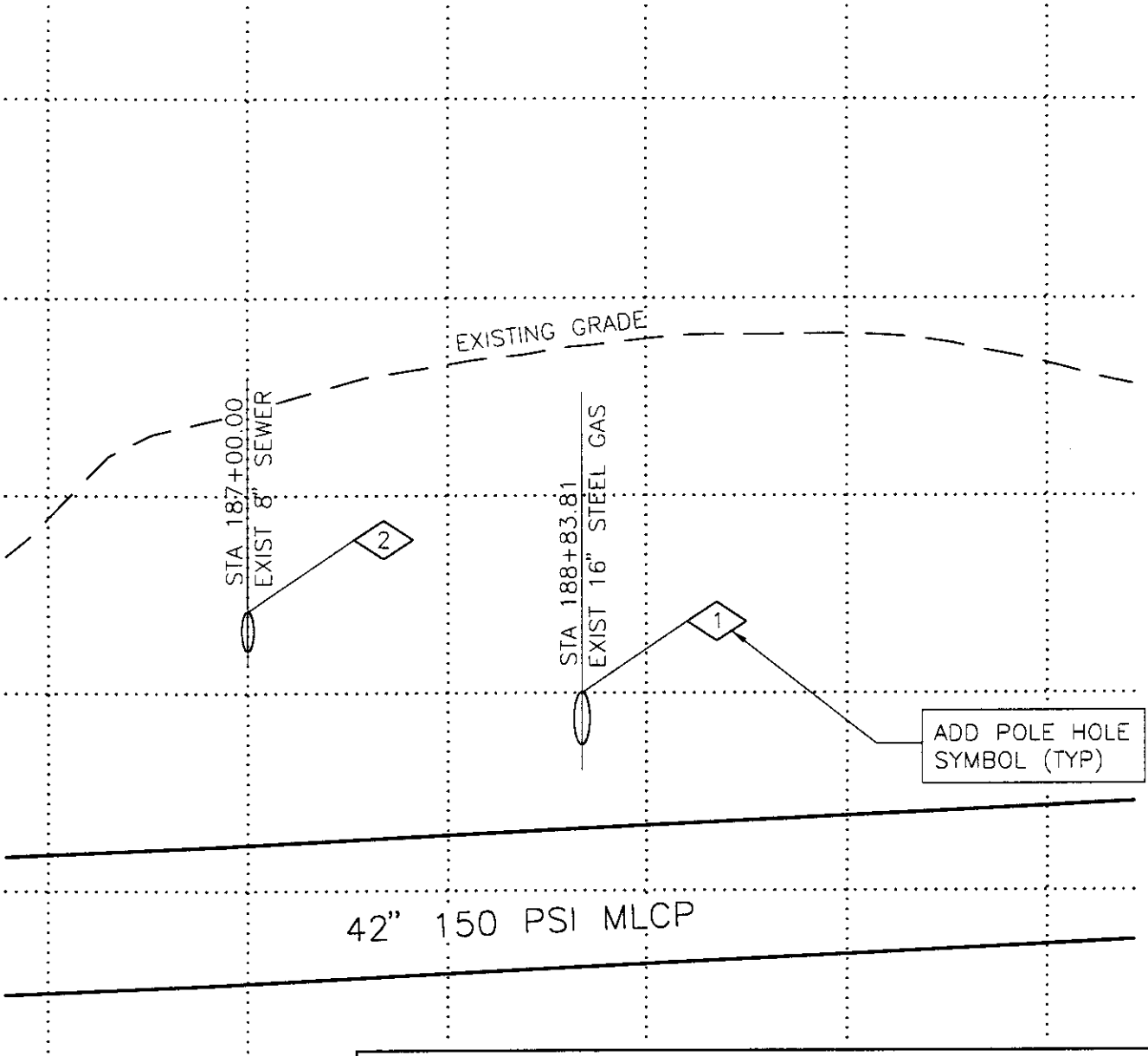

POT HOLE SCHEDULE		
NO.	ELEVATION	DESCRIPTION
1	2589.40	16" STEEL HIGH PRESSURE GAS MAIN
2	CONTRACTOR TO LOCATE	8" SANITARY SEWER

CREATE POT HOLE SCHEDULE AND ADD INFORMATION AS SHOWN ABOVE. NOTIFY CONTRACTOR IN THE ELEVATION COLUMN OF POT HOLES TO BE COMPLETED.

FILE NOMENCLATURE FOR AUTOCAD GENERATED CONTRACT DRAWINGS

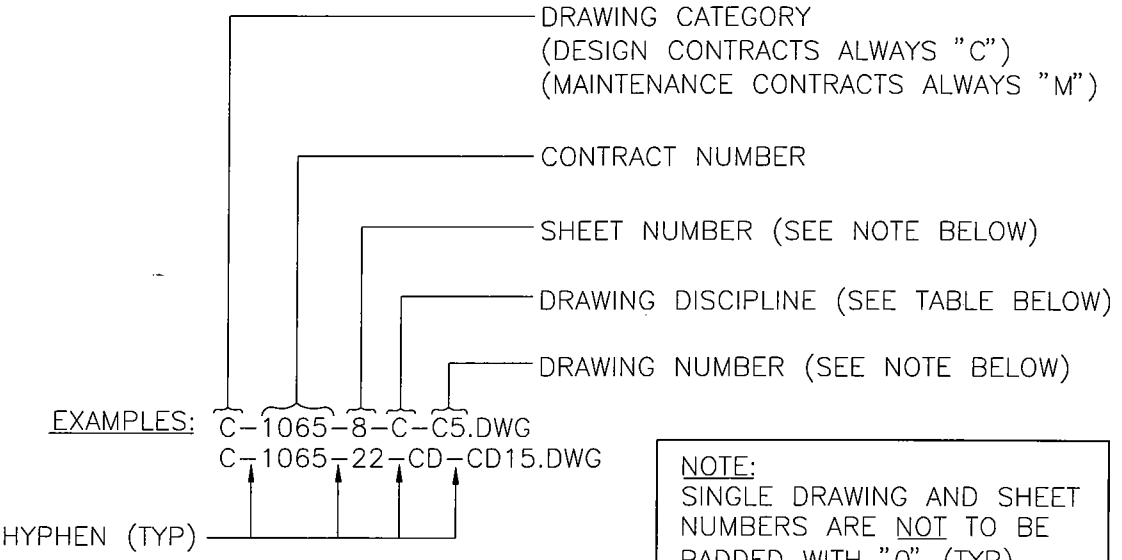

NOTE:
SINGLE DRAWING AND SHEET NUMBERS ARE NOT TO BE PADDED WITH "0" (TYP).

DRAWING DISCIPLINE TABLE

A	ARCHITECTURAL PLAN SHEETS
AD	ARCHITECTURAL DETAIL SHEETS
C	CIVIL PLAN SHEETS
CD	CIVIL DETAIL SHEETS
D	DEMOLITION PLANS
E	ELECTRICAL PLAN SHEETS
ED	ELECTRICAL DETAIL SHEETS
F	FIRE PROTECTION PLAN SHEETS
FD	FIRE PROTECTION DETAIL SHEETS
G	GENERAL SHEETS
I	INSTRUMENTATION PLAN SHEETS
ID	INSTRUMENTATION DETAIL SHEETS
L	LANDSCAPING AND IRRIGATION PLAN SHEETS
LD	LANDSCAPE AND IRRIGATION DETAIL SHEETS
M	MECHANICAL SHEETS
MD	MECHANICAL DETAIL SHEETS
P	PLUMBING PLAN SHEETS
PD	PLUMBING DETAIL SHEETS
S	STRUCTURAL PLAN SHEETS
SD	STRUCTURAL DETAIL SHEETS
SV	SURVEY SHEETS
T	TRAFFIC PLAN SHEETS
TD	TRAFFIC DETAIL SHEETS
X	EXHIBIT/INTERPRETIVE SHEETS
XD	EXHIBIT/INTERPRETIVE DETAIL SHEETS

LAS VEGAS VALLEY WATER DISTRICT
DESIGN DETAIL STANDARDS

TABLE OF CONTENTS

DESCRIPTION	REV. DATE	DWG NO.
GENERAL		
Cover Sheet	04-12-06	G01
LVVWD General Notes, Legend and Agency Approvals	12-08-09	G02
Clark County General Notes	04-28-10	G03
City of Las Vegas General Notes I	06-15-10	G04-1
City of Las Vegas General Notes II	06-15-10	G04-2
Abbreviation List	12-19-01	G05
Estimated Quantities	11-15-01	G06
Contract Title Block	11-08-01	Contract-Shell

LAS VEGAS VALLEY WATER DISTRICT

CONTRACT NO. CXXXX

PROJECT TITLE OF CONTRACT

LAS VEGAS VALLEY WATER DISTRICT
PEOPLE LEADING THE WAY

SAVING WATER
IT'S A GRASS ROOTS EFFORT

LIST OF DRAWINGS

SHEET NO	DRAWING NO	DESCRIPTION
1	G1	COVER SHEET
X	XX	XXXXXXXXXXXXXXXXXXXXXXXXXXXXXXXXXXXXXXXXXXXXXX
X	XX	XXXXXXXXXXXXXXXXXXXXXXXXXXXXXXXXXXXXXXXXXXXXXX
X	XX	XXXXXXXXXXXXXXXXXXXXXXXXXXXXXXXXXXXXXXXXXXXXXX
X	XX	XXXXXXXXXXXXXXXXXXXXXXXXXXXXXXXXXXXXXXXXXXXXXX
X	XX	XXXXXXXXXXXXXXXXXXXXXXXXXXXXXXXXXXXXXXXXXXXXXX
X	XX	XXXXXXXXXXXXXXXXXXXXXXXXXXXXXXXXXXXXXXXXXXXXXX
X	XX	XXXXXXXXXXXXXXXXXXXXXXXXXXXXXXXXXXXXXXXXXXXXXX
X	XX	XXXXXXXXXXXXXXXXXXXXXXXXXXXXXXXXXXXXXXXXXXXXXX
X	XX	XXXXXXXXXXXXXXXXXXXXXXXXXXXXXXXXXXXXXXXXXXXXXX
X	XX	XXXXXXXXXXXXXXXXXXXXXXXXXXXXXXXXXXXXXXXXXXXXXX
X	XX	XXXXXXXXXXXXXXXXXXXXXXXXXXXXXXXXXXXXXXXXXXXXXX
X	XX	XXXXXXXXXXXXXXXXXXXXXXXXXXXXXXXXXXXXXXXXXXXXXX
X	XX	XXXXXXXXXXXXXXXXXXXXXXXXXXXXXXXXXXXXXXXXXXXXXX
X	XX	XXXXXXXXXXXXXXXXXXXXXXXXXXXXXXXXXXXXXXXXXXXXXX
X	XX	XXXXXXXXXXXXXXXXXXXXXXXXXXXXXXXXXXXXXXXXXXXXXX
X	XX	XXXXXXXXXXXXXXXXXXXXXXXXXXXXXXXXXXXXXXXXXXXXXX
X	XX	XXXXXXXXXXXXXXXXXXXXXXXXXXXXXXXXXXXXXXXXXXXXXX
X	XX	XXXXXXXXXXXXXXXXXXXXXXXXXXXXXXXXXXXXXXXXXXXXXX
X	XX	XXXXXXXXXXXXXXXXXXXXXXXXXXXXXXXXXXXXXXXXXXXXXX
X	XX	XXXXXXXXXXXXXXXXXXXXXXXXXXXXXXXXXXXXXXXXXXXXXX
X	XX	XXXXXXXXXXXXXXXXXXXXXXXXXXXXXXXXXXXXXXXXXXXXXX
X	XX	XXXXXXXXXXXXXXXXXXXXXXXXXXXXXXXXXXXXXXXXXXXXXX
X	XX	XXXXXXXXXXXXXXXXXXXXXXXXXXXXXXXXXXXXXXXXXXXXXX
X	XX	XXXXXXXXXXXXXXXXXXXXXXXXXXXXXXXXXXXXXXXXXXXXXX
X	XX	XXXXXXXXXXXXXXXXXXXXXXXXXXXXXXXXXXXXXXXXXXXXXX
X	XX	XXXXXXXXXXXXXXXXXXXXXXXXXXXXXXXXXXXXXXXXXXXXXX
X	XX	XXXXXXXXXXXXXXXXXXXXXXXXXXXXXXXXXXXXXXXXXXXXXX
X	XX	XXXXXXXXXXXXXXXXXXXXXXXXXXXXXXXXXXXXXXXXXXXXXX
X	XX	XXXXXXXXXXXXXXXXXXXXXXXXXXXXXXXXXXXXXXXXXXXXXX
X	XX	XXXXXXXXXXXXXXXXXXXXXXXXXXXXXXXXXXXXXXXXXXXXXX
X	XX	XXXXXXXXXXXXXXXXXXXXXXXXXXXXXXXXXXXXXXXXXXXXXX
X	XX	XXXXXXXXXXXXXXXXXXXXXXXXXXXXXXXXXXXXXXXXXXXXXX
X	XX	XXXXXXXXXXXXXXXXXXXXXXXXXXXXXXXXXXXXXXXXXXXXXX
X	XX	XXXXXXXXXXXXXXXXXXXXXXXXXXXXXXXXXXXXXXXXXXXXXX
X	XX	XXXXXXXXXXXXXXXXXXXXXXXXXXXXXXXXXXXXXXXXXXXXXX
X	XX	XXXXXXXXXXXXXXXXXXXXXXXXXXXXXXXXXXXXXXXXXXXXXX
X	XX	XXXXXXXXXXXXXXXXXXXXXXXXXXXXXXXXXXXXXXXXXXXXXX
X	XX	XXXXXXXXXXXXXXXXXXXXXXXXXXXXXXXXXXXXXXXXXXXXXX
X	XX	XXXXXXXXXXXXXXXXXXXXXXXXXXXXXXXXXXXXXXXXXXXXXX
X	XX	XXXXXXXXXXXXXXXXXXXXXXXXXXXXXXXXXXXXXXXXXXXXXX
X	XX	XXXXXXXXXXXXXXXXXXXXXXXXXXXXXXXXXXXXXXXXXXXXXX
X	XX	XXXXXXXXXXXXXXXXXXXXXXXXXXXXXXXXXXXXXXXXXXXXXX

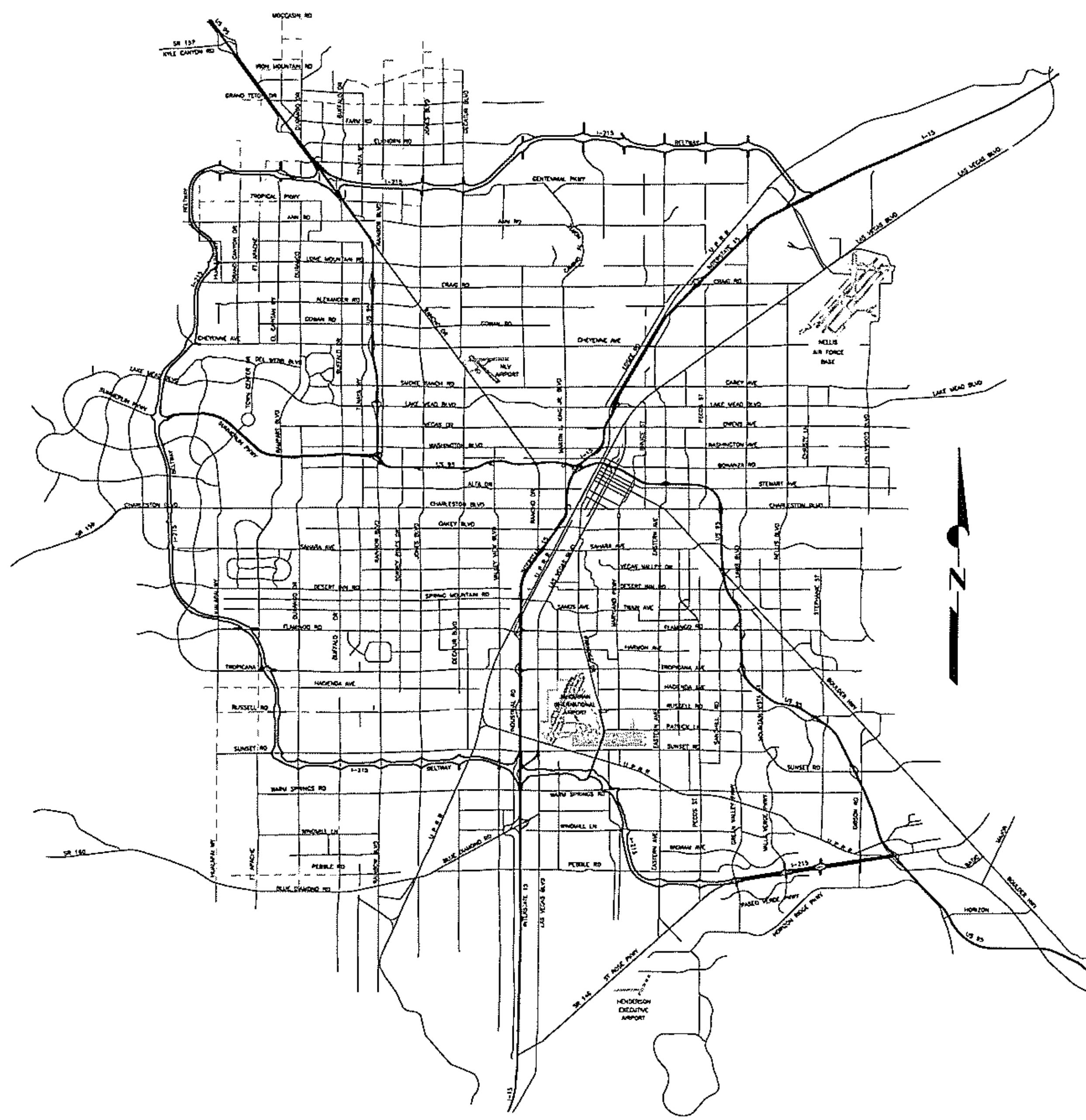

LOCATION MAP
NOT TO SCALE

SPACE AVAILABLE FOR ADDITIONAL
LIST OF DRAWINGS

ACCEPTED BY:

SHAWN P. MOLLUS, PE, DIRECTOR OF LVVWD ENGINEERING   DATE

CAUTION TO CONTRACTOR:
THE CONTRACTOR SHALL BE RESPONSIBLE TO INVESTIGATE AND VERIFY THE ACTUAL LOCATION AND DEPTH OF ALL EXISTING UNDERGROUND FACILITIES AT LEAST 48 HOURS IN ADVANCE OF THE PERFORMANCE OF ANY WORK.

Avoid cutting underground utility lines. It's costly.
Call before you Dig
1-800-227-2600

LAS VEGAS VALLEY WATER DISTRICT

VERIFY SCALE
1/2 0 1/2 1
BAR REPRESENTS ONE AND ONE-HALF INCHES ON ORIGINAL

SCALE
HORIZ. SCALE 1" = XX'
VERT. SCALE 1" = X'

XXXXXXXXXXXXXXXXXXXXXXXXXXXXX
XXXXXXXXXXXXXXXXXXXXXXXXXXXXX

DRAWN BY: XXXXXXXXXXXXXXXXX XX/XX/XX
CHECKED BY: XXXXXXXXXXXXXXXXX XX/XX/XX
RECOMMENDED BY: LVVWD SENIOR CIVIL ENGINEER DATE
ACCEPTED BY: DESIGN MANAGER DATE

REVISIONS:

CONTRACT NUMBER
CXXXX
DRAWING NUMBER XXXX
SHEET XX OF XX

LEGEND

DESCRIPTION	SYMBOL	
	PROPOSED	EXISTING
12" WATER PIPELINE	12" PVC	12" PVC
66" WATER PIPELINE	66" MLCP — ACCESS MH	66" MLCP
IN-LINE VALVE VAULT		
ACCESS MANHOLE (TO PIPELINE)		
BLOWOFF		
COMBINATION AIR VALVE		
TEST STATION (CATHODIC)		
REDUCER		
END CAP FOR WATER PIPELINE		
WATER VALVE		
FIRE HYDRANT ASSEMBLY		
WATER METER	WM	WM
WATER METER SIZE	1"	
IDENTIFICATION HEXAGON	XX	
EDGE OF PAVEMENT		
SANITARY SEWER MANHOLE		S
STORM DRAIN MANHOLE		SD
POWER POLE W/GUY WIRE		
STREET LIGHT (GENERIC SYMBOL NOT RELATED TO WATTAGE)		
SURVEY MONUMENT		
POLYGON FOR TRANSMISSION POLE		
ELECTRICAL BOX		ELEC
ELECTRICAL PANEL BOX		ELEC PANEL
CABLE TV		CTV — CTV
FENCE		X X X X X
GAS LINE		2" G
CONTOURS		2640
DITCH		
SANITARY SEWER		10" SS
STORM DRAIN		24" SD
UNDERGROUND POWER		UGP
UNDERGROUND TELEPHONE		UGTEL
CURB, GUTTER AND SIDEWALK		
PROPERTY LINE		
CENTER LINE		
BLOCK WALL		
RIGHT-OF-WAY LINE		
PATENT RESERVATION OR EASEMENT LINE		
SECTION LINE		
ANGLE (HORIZONTAL OR VERTICAL)		
ANGLE OF CURVE		
FIELD WELD		
REFERENCE BUBBLE	1 / D2 — DETAIL OR SECTION REFERENCE NUMBER (DETAIL) OR LETTER (SECTION); DRAWING NUMBER OF SHEET WHERE DETAIL OR SECTION RESIDES; C1, C9, C11 — ALL SHEETS THAT REFERENCE TO THE DETAIL OR SECTION	

LAS VEGAS VALLEY WATER DISTRICT NOTES

1. THE CONTRACTOR SHALL PROVIDE ALL NECESSARY HORIZONTAL AND VERTICAL TRANSITIONS BETWEEN NEW CONSTRUCTION AND EXISTING SURFACES FOR PROPER DRAINAGE, AND FOR INGRESS AND EGRESS TO SAID CONSTRUCTION. EXTENT OF TRANSITIONS TO BE DETERMINED IN THE FIELD BY THE LVVWD ENGINEER.
2. REPLACE EXISTING SEWER LINES OR STORM DRAINS WHICH CROSS OVER NEW WATER LINE WITH C900 WATER QUALITY PIPE TEN (10) FEET BEYOND EACH SIDE OF WATER LINE OR SLURRY ENCASE OR WELD JOINTS (MLCP) OF NEW WATER LINE TEN (10) FEET BEYOND EACH SIDE OF ALL SEWER MAINS AND LATERALS OR STORM DRAINS.
3. SOME WATER SERVICE LATERALS ARE NOT SHOWN. ALL WATER SERVICE LATERALS SHALL BE PROTECTED IN PLACE OR REPLACED WITH COPPER TUBING AT THE CONTRACTOR'S EXPENSE IN ACCORDANCE WITH THE UDS.
4. DURING ALL PHASES OF CONSTRUCTION THE CONTRACTOR SHALL MAINTAIN A 10 FOOT MINIMUM CLEARANCE IN ALL DIRECTIONS OF ALL OVERHEAD POWER LINES AND EQUIPMENT.
5. REMOVAL OR RELOCATION OF POWER POLES, TELEPHONE POLES, CABLE POLES OR JOINTLY-OWNED POLES AND APPURTENANCES WHICH INTERFERE WITH THE IMPROVEMENTS REQUIRED TO BE CONSTRUCTED UNDER THIS CONTRACT, SHALL BE COORDINATED BY THE CONTRACTOR WITH THE RESPECTIVE UTILITY COMPANY.
6. ALL AGENCY/UTILITY INSPECTORS SHALL BE CALLED WHENEVER WORK IS TO BE PERFORMED NEAR OR ON ANY OF THEIR FACILITIES.
7. SEWER LATERALS ARE NOT SHOWN. THE CONTRACTOR SHALL MAINTAIN CONTINUOUS SEWER SERVICE TO CUSTOMERS. SEWER LATERALS CUT DURING CONSTRUCTION SHALL BE REPAIRED BY THE CONTRACTOR AT HIS EXPENSE PER DESIGN AND CONSTRUCTION STANDARDS OF AGENCY HAVING JURISDICTION.
8. SANITARY SEWER MANHOLES SHALL BE PROTECTED FROM DAMAGE WHEN EXCAVATING IN THEIR VICINITY.

DEVIATIONS FROM STANDARDS

THERE ARE NO DEVIATIONS FROM APPLICABLE LAS VEGAS VALLEY WATER DISTRICT STANDARDS, UNLESS STATED IN THE SPECIFICATIONS.

APPROVED BY:

NV ENERGY ACKNOWLEDGES THAT WE HAVE RECEIVED YOUR PLANS AND WILL PROVIDE SERVICE TO ALL ELECTRICAL NEEDS ASSOCIATED WITH THIS PROJECT. NV ENERGY RESERVES THE RIGHT TO ADDRESS ANY EXISTING OR FUTURE CONFLICTS ONCE THE FINAL DESIGN IS COMPLETED. THE NEW SERVICE AND THE RESOLUTION OF ANY CONFLICTS WILL BE ACCOMPLISHED PURSUANT TO THE NEVADA PUBLIC UTILITY COMMISSION'S RULES AND REGULATIONS.

NV ENERGY _____ DATE

THE AFFIXED CENTURYLINK APPROVAL DOES NOT ASSUME OR GUARANTEE LIABILITY FOR KNOWN OR UNKNOWN CONFLICTS WITH EXISTING OR PROPOSED IMPROVEMENTS. RESOLUTION OF ANY CONFLICT WILL BE ACCOMPLISHED PURSUANT TO LOCAL ORDINANCES, NEVADA REVISED STATUTES AND/OR PUBLIC UTILITY COMMISSION RULES AND REGULATIONS.

CENTURYLINK _____ DATE

COX COMMUNICATIONS, LAS VEGAS INC. _____ DATE

SOUTHWEST GAS CORPORATION _____ DATE

SOUTHERN NEVADA WATER AUTHORITY _____ DATE

AT & T _____ DATE

KERN RIVER GAS TRANSMISSION _____ DATE

KINDER MORGAN ENERGY PARTNERS _____ DATE

OTHER (IF NECESSARY) _____ DATE

OTHER (IF NECESSARY) _____ DATE

CCWRD PROJECT CONTROL NUMBER IS _____

SIGNATURE ON THESE PLANS SHALL NOT BE CONSTRUED TO BE A PERMIT FOR OR AN APPROVAL OF ANY VIOLATION OF CLARK COUNTY WATER RECLAMATION DISTRICT RULES, REGULATIONS, OR DESIGN AND CONSTRUCTION STANDARDS. THE APPROVAL OF THESE DRAWINGS DOES NOT GUARANTEE CAPACITY IN THE DISTRICT'S COLLECTION OR TREATMENT SYSTEMS.

CLARK COUNTY WATER RECLAMATION DISTRICT _____ DATE

LAS VEGAS VALLEY WATER DISTRICT

VERIFY SCALE
1/2 0 1/2 1
BAR REPRESENTS ONE AND ONE-HALF INCHES ON ORIGINAL

GRAPHIC MODE: SCALE 1" = XX NOT TO SCALE

XXXXXXXXXXXXXXXXXXXX
XXXXXXXXXXXXXXXXXXXX

DRAWN BY: XXXXXXXXXXXXXXX XX/XX/XX
CHECKED BY: XXXXXXXXXXXXXXX XX/XX/XX
RECOMMENDED BY: _____ DATE
LVVWD SENIOR CIVIL ENGINEER
ACCEPTED BY: _____ DATE
DESIGN MANAGER

REVISIONS:

CONTRACT NUMBER
CXXXX
DRAWING NUMBER G2
SHEET XX OF XX

CLARK COUNTY WATER RECLAMATION DISTRICT GENERAL NOTES

1. ALL CONSTRUCTION AND MATERIALS SHALL CONFORM TO THE LATEST EDITION OF THE DESIGN AND CONSTRUCTION STANDARDS FOR WASTEWATER COLLECTION SYSTEMS, LATEST EDITION; UNIFORM DESIGN AND CONSTRUCTION STANDARDS FOR POTABLE WATER SYSTEMS, LATEST EDITION; THE UNIFORM STANDARDS FOR PUBLIC WORKS CONSTRUCTION OFF-SITE IMPROVEMENTS, CLARK COUNTY, NEVADA, AS AMENDED; AND THE UNIFORM PLUMBING CODE. CONTRACTOR SHALL ADVISE THE CONTROLLING AGENCY OF ANY CONFLICTS DISCOVERED BETWEEN THESE SPECIFICATIONS PRIOR TO PROCEEDING WITH THE WORK GOVERNED BY THE CONFLICTING REQUIREMENTS. THE ENGINEER AND/OR CONTRACTOR SHALL PROPOSE A RESOLUTION TO THE CONFLICT FOR REVIEW BY THE AGENCY PRIOR TO PERFORMING THE WORK AFFECTED BY THE CONFLICT. THE RESOLUTION SHALL GENERALLY BE IN THE MANNER THAT YIELDS THE HIGHER QUALITY AND/OR PERFORMANCE OF THE WORK. THE CONTROLLING AGENCY SHALL ISSUE WRITTEN APPROVAL FOR THE RESOLUTION OF THE CONFLICT WHICH SHALL BECOME A PART OF THE CONSTRUCTION DOCUMENTS FOR THE WORK.
2. THESE STANDARDS APPLY TO ALL CONSTRUCTION.
3. SEWER MAINS SHALL BE LAID INDIVIDUALLY IN TRENCHES THAT ARE INDEPENDENT FROM THE TRENCHES FOR OTHER UTILITIES.
4. ALL LATERALS SHALL BE LAID AT SLOPES NOT LESS THAN THE MINIMUM SLOPES SHOWN IN THESE SPECIFICATIONS.
5. IT SHALL BE THE CONTRACTOR'S SOLE RESPONSIBILITY TO PERFORM CONSTRUCTION IN FULL CONFORMANCE WITH THE APPROVED CONSTRUCTION DOCUMENTS. SHOULD THE DEVELOPER, ENGINEER OR CONTRACTOR WISH TO MAKE CHANGES TO THE APPROVED CONSTRUCTION DOCUMENTS, SUCH CHANGES SHALL BE APPROVED BY THE AGENCY PRIOR TO CONSTRUCTION OF THE AFFECTED IMPROVEMENTS. CHANGES CONSTRUCTED WITHOUT AGENCY APPROVAL SHALL BE REMOVED BY THE CONTRACTOR AT ITS OWN EXPENSE AND THE WORK CONSTRUCTED AS DEPICTED IN THE APPROVED CONSTRUCTION DOCUMENTS.
6. SOIL TESTING SHALL BE PERFORMED IN ACCORDANCE WITH SECTION 3.15 OF THE DESIGN AND CONSTRUCTION STANDARDS FOR WASTEWATER COLLECTION SYSTEMS, LATEST EDITION.
7. ALL AIR TESTING, VISUAL INSPECTIONS, SYSTEM CLEANING, DEFLECTION TESTING, TELEVISING, PRESSURE TESTING AND LEAKAGE TESTING SHALL BE IN ACCORDANCE WITH SECTION 3.19 OF THE DESIGN AND CONSTRUCTION STANDARDS FOR WASTEWATER COLLECTION SYSTEMS, LATEST EDITION.
8. CUT SHEETS CONFORMING TO SECTION 3.6 OF THE DESIGN AND CONSTRUCTION STANDARDS FOR WASTEWATER COLLECTION SYSTEMS, LATEST EDITION SHALL BE SUBMITTED BY THE CONTRACTOR TO THE CONTROLLING AGENCY FOR REVIEW BEFORE BEGINNING CONSTRUCTION. CONTRACTOR SHALL NOT BEGIN CONSTRUCTION UNTIL AUTHORIZED BY THE AGENCY.
9. CONTRACTORS INSTALLING SEWER MAINS THAT WILL BE UNDER THE JURISDICTION OF THE AGENCY SHALL POSSESS A CLASS "A" LICENSE PER THE NEVADA STATE CONTRACTOR'S BOARD.
10. WHEN CONNECTING TO AN EXISTING STUB, CONTRACTOR SHALL CLEAN AND TEST BOTH THE NEW AND EXISTING PORTIONS OF THE LINE TO THE NEXT MANHOLE UPSTREAM/DOWNSTREAM.
11. ALL SANITARY SEWER MANHOLES SHALL BE LOCATED AND CONSTRUCTED SUCH THAT THEY ARE ACCESSIBLE TO CONVENTIONAL SEWER MAINTENANCE VEHICLES AT ALL TIMES AND UNDER ALL WEATHER CONDITIONS. THOSE MANHOLES INSTALLED ALONG ACCESS ROADS HAVING SINGLE POINTS OF ENTRY AND EGRESS (I.E. DEAD-END ROADS) SHALL HAVE AT LEAST ONE LOCATION ALONG THE ACCESS ROAD HAVING SUFFICIENT WIDTH TO ALLOW TURN-AROUNDS OF VEHICLES HAVING INSIDE TURNING RADII OF 50 FEET.
12. ALL SEWER MAINS UNDER CONSTRUCTION SHALL HAVE A DEBRIS TRAP PER STANDARD DRAWING SD-30 AT THE POINT OF CONNECTION TO THE EXISTING SEWER SYSTEM UNTIL ALL CONSTRUCTION ACTIVITIES INCLUDING FINAL TESTING ARE COMPLETED AND THE SEWER IS READY FOR FINAL ACCEPTANCE BY THE AGENCY.
13. ALL MANHOLES UNDER CONSTRUCTION SHALL HAVE PLUGS PLACED IN THEIR OUTLET PIPES DURING ALL CONSTRUCTION ACTIVITIES TO PREVENT THE MIGRATION OF SEWER CONSTRUCTION DEBRIS DOWNSTREAM. THESE PLUGS MAY BE REMOVED FOR SHORT PERIODS AS NECESSARY TO ACCOMPLISH FINAL SEWER CLEANING AND TESTING TASKS PRIOR TO FINAL ACCEPTANCE OF THE IMPROVEMENTS.
14. PRIOR TO ANY SEWER MAIN BEING PLACED IN SERVICE AND AS A CONDITION OF FINAL ACCEPTANCE, ALL NEW SEWER MAINS SHALL BE TELEVISED IN ACCORDANCE WITH SECTION 3.19.1.E OF THE DESIGN STANDARDS.
15. IF ANY EXISTING MANHOLE HAVING A LINING SYSTEM IS BEING MODIFIED AS PART OF THE CONSTRUCTION OF THE NEW SANITARY SEWER, THAT LINING SYSTEM SHALL BE RESTORED TO ITS ORIGINAL CONDITION PRIOR TO THE MODIFICATIONS USING LINING MATERIALS AND SYSTEMS THAT ARE FULLY COMPATIBLE WITH THE ORIGINAL LINING.
16. FIELD-INSTALLED SEWER LINING SYSTEMS MAY NOT BE INSTALLED UNTIL AFTER ALL MANHOLE CONSTRUCTION TASKS ARE COMPLETED, INCLUDING BACKFILLING AND INITIAL GRADE ADJUSTMENTS, BUT PRIOR TO FINAL GRADE ADJUSTMENT.
17. NEW SEWERS HAVING GRADES OF 0.5 PERCENT OR LESS SHALL BE STAKED FOR CONSTRUCTION AT A MAXIMUM OF 25 FEET ON CENTER.
18. SEWER LATERALS SHALL BE CONNECTED TO SEWER MAINS ONLY. LATERALS MAY NOT BE CONNECTED TO SANITARY SEWER MANHOLES UNLESS APPROVED BY THE AGENCY.
19. SEWER PIPE MATERIAL, PIPE SPECIFICATION, WALL THICKNESS, INTERNAL DIAMETER AND PIPE SLOPE SHALL BE UNIFORM BETWEEN MANHOLES. CHANGES IN PIPE MATERIALS, SPECIFICATIONS, WALL THICKNESSES, INTERNAL DIAMETERS AND/OR PIPE SLOPES SHALL BE MADE AT MANHOLES ONLY.
20. LOCATOR RIBBON AND MARKER BALLS SHALL BE PLACED ABOVE ALL NEW SANITARY SEWERS, LATERALS AND FORCE MAINS IN ACCORDANCE WITH SECTION 3.14 OF THE DESIGN STANDARDS.

REGIONAL TRANSPORTATION COMMITTEE CITIZENS AREA TRANSIT ACCESS NOTES

1. UNLESS OTHERWISE SPECIFIED IN THE SPECIAL PROVISIONS, NO PUBLIC BUS OR TRANSIT STOP SHALL BE TEMPORARILY CLOSED WITHOUT THE WRITTEN CONSENT OF THE REGIONAL TRANSPORTATION COMMISSION (RTC) DIRECTOR OR HIS DESIGNEE. THE RTC SHALL BE NOTIFIED AT LEAST TEN (10) WORKING DAYS PRIOR TO THE PROPOSED TEMPORARY CLOSURE OF ANY BUS OR TRANSIT STOP, INCLUDING THOSE LISTED IN THE SPECIAL PROVISIONS.
2. NO BUS STOPS AT TRANSFER POINTS SHALL BE CLOSED DURING CONSTRUCTION. BUS STOPS AT TRANSFER POINTS CAN, HOWEVER, BE TEMPORARILY RELOCATED WITH THE APPROVAL OF THE RTC DIRECTOR OR HIS DESIGNEE.
3. IF BUS OR TRANSIT STOP IS TEMPORARILY RELOCATED, THE EXISTING BUS OR TRANSIT STOP SIGN PANELS SHALL BE RELOCATED TO TEMPORARY BUS OR TRANSIT STOPS AND SHALL REMAIN UNTIL TEMPORARY STOP IS REMOVED. TEMPORARY RELOCATION OF SIGN PANELS SHALL CONFORM TO SUBSECTION 627.03.05, "RELOCATION."
4. THE CONTRACTOR SHALL MAINTAIN ACCESS WHICH IS IN CONFORMANCE TO THE REQUIREMENTS OF THE AMERICANS WITH DISABILITIES ACT TO AND FROM BUS OR TRANSIT STOPS WHICH REMAIN OPEN AT ALL TIMES DURING CONSTRUCTION.

CLARK COUNTY TRAFFIC NOTES

1. ALL PERMANENT TRAFFIC CONTROL DEVICES CALLED FOR HEREON SHALL BE IN PLACE AND IN FINAL POSITION PRIOR TO ALLOWING ANY PUBLIC TRAFFIC ONTO THE PORTIONS OF THE ROAD(S) BEING IMPROVED HEREUNDER, REGARDLESS OF THE STATUS OF COMPLETION OF PAVING OR OTHER OFF-SITE IMPROVEMENTS CALLED FOR BY THESE PLANS.
2. BEFORE ANY WORK IS STARTED IN THE RIGHT-OF-WAY, THE CONTRACTOR SHALL INSTALL ALL ADVANCE WARNING SIGNS FOR THE CONSTRUCTION ZONE. THE CONTRACTOR SHALL INSTALL TEMPORARY GROUND MOUNTED STOP SIGNS AT ALL NEW STREET ENCROACHMENTS INTO EXISTING COUNTY STREETS IMMEDIATELY AFTER FIRST GRADING WORK IS ACCOMPLISHED, AND SHALL MAINTAIN SAID SIGNS UNTIL PERMANENT SIGNS ARE INSTALLED.
3. ALL CONSTRUCTION SIGNING, BARRICADING AND PAVEMENT MARKINGS SHALL CONFORM TO THE NEVADA WORK ZONE TRAFFIC CONTROL HANDBOOK – 1986 AND TO THE MANUAL ON UNIFORM TRAFFIC CONTROL DEVICES CURRENT EDITION.
4. IF THE IMPROVEMENTS NECESSITATE THE OBLITERATION, TEMPORARY OBSTRUCTION, TEMPORARY REMOVAL, OR RELOCATION OF ANY EXISTING TRAFFIC PAVEMENT MARKING, SUCH PAVEMENT MARKING SHALL BE RESTORED OR REPLACED WITH LIKE MATERIALS TO THE SATISFACTION OF THE COUNTY TRAFFIC MANAGER.
5. THE DEVELOPER SHALL BE RESPONSIBLE TO PROVIDE AND INSTALL ALL PERMANENT SIGNS SHOWN ON THE PLANS. STREET NAME SIGNS SHALL CONFORM IN THEIR ENTIRETY TO CLARK COUNTY AREA STANDARDS. ALL OTHER SIGNS SHALL BE STANDARD SIZE UNLESS OTHERWISE SPECIFIED ON THE PLANS. ALL SIGN POSTS SHALL BE INSTALLED IN ACCORDANCE WITH CLARK COUNTY AREA STANDARDS. ALL SIGNS SHALL USE TYPE III SHEETING.
6. IF A PROPOSED STREET LIGHT STANDARD IS FIELD LOCATED TO WITHIN FIVE (5) FEET OF ANY SIGN SHOWN HEREON TO BE MOUNTED ON A SIGN POST, THEN CHANGE SIGN MOUNTING TO ONE ON THE STREET LIGHT STANDARD.
7. PRIOR TO CONSTRUCTION, THE STREET SIGN CONTRACTOR SHALL OBTAIN STREET NAMES AND BLOCK NUMBERING FROM THE CURRENT PLANNING DIVISION OF THE DEPARTMENT OF COMPREHENSIVE PLANNING.
8. ALL TRAFFIC SIGNAL POLE ASSEMBLIES, STEEL PEDESTALS FOR CABINETS, AND STREET LIGHT POLES SHALL BE GALVANIZED PER ASTM A.123.
9. ALL STREET LIGHTING INSTALLATIONS EXCEPT AS NOTED ON THE STREET LIGHTING PLANS SHALL CONFORM TO THE UNIFORM STANDARD DRAWINGS AND THE UNIFORM STANDARD SPECIFICATIONS FOR PUBLIC WORKS CONSTRUCTION, OFF-SITE IMPROVEMENTS, CLARK COUNTY AREA, NEVADA LATEST EDITION.
10. THE FOLLOWING CLARK COUNTY UNDERGROUND FACILITIES MAY BE LOCATED IN YOUR PROJECT AREA: FREEWAY AND ARTERIAL SYSTEM OF TRANSPORTATION (F.A.S.T.) INTERCONNECT CABLE. CONTRACTOR MUST CONTACT FAST AT 702-432-5300 FOR UNDERGROUND LINE LOCATIONS.
11. F.A.S.T. INTERCONNECT CABLE POLICY IS IN EFFECT. INTERCONNECT CABLE MUST BE MAINTAINED AT ALL TIMES. DEVELOPER/CONTRACTOR SHALL PROVIDE TEMPORARY OVERHEAD INTERCONNECT CABLE, WHILE PERMANENT CABLE IS BEING RELOCATED. TEMPORARY AERIAL INSTALLATION MUST BE ACCEPTABLE TO THE COUNTY TRAFFIC MANAGER AND TO F.A.S.T. ANY DAMAGE TO THIS CABLE IS DEEMED AN EMERGENCY BY F.A.S.T., CITY OF LAS VEGAS, CLARK COUNTY AND NDOT AND MUST BE REPAIRED IMMEDIATELY TO F.A.S.T. ACCEPTANCE. DAMAGES MAY BE ASSESSED AGAINST THE CONTRACTOR AFTER 24 HOURS HAS ELAPSED FROM TIME OF BREAK OR DAMAGE. $2,500 PER DAY FOR DAMAGE TO COPPER WIRED INTERCONNECT CABLE AND $7,500 PER DAY FOR DAMAGE TO FIBER OPTIC CABLE.
12. ALL NEW OR REPLACEMENT TRAFFIC SIGNAL LOOPS SHALL BE INSTALLED USING CABLE-IN-DUCT WIRING. EACH SHALL HAVE INDEPENDENT LEAD-IN WIRES FOR EACH LOOP FROM THE CONTROLLER TO THE PULL-BOX, AND EACH LEAD-IN SHALL BE INDIVIDUALLY TAGGED.
13. TRAFFIC SIGNAL PEDESTRIAN HEADS SHALL BE THE L.E.D TYPE.
14. ELECTRICAL POWER SERVICE POINT LOCATION(S) FOR STREET LIGHTING AND TRAFFIC SIGNALS MUST BE INDICATED ON THE PLANS. IF CONNECTING TO AN EXISTING CIRCUIT, INDICATE LOCATION OF EXISTING SERVICE POINT FOR EACH CIRCUIT.
15. WHEN STREET LIGHTS ARE TO BE CONNECTED TO AN EXISTING CIRCUIT, THE ENGINEER MUST CERTIFY THAT THE EXISTING CIRCUIT IS CAPABLE OF HANDLING THE ADDITIONAL CIRCUIT LOAD.
16. CLARK COUNTY RESERVES THE RIGHT TO REJECT STREET LIGHT AND TRAFFIC SIGNAL POLES AND ASSEMBLIES WHICH HAVE A "STRIPED" APPEARANCE.
17. PRIOR TO BEGINNING OF CONSTRUCTION, MODIFICATION OR RELOCATION OF ANY TRAFFIC SIGNAL SYSTEM, WRITTEN NOTICE SHALL BE SUBMITTED TO THE CLARK COUNTY TRAFFIC MANAGEMENT DIVISION OF THE DATE THAT WORK WILL BEGIN.
18. THREE (3) NORMAL WORKING DAYS PRIOR TO TURN-ON OR COMPLETION OF MODIFICATION(S) TO A TRAFFIC SIGNAL SYSTEM, WRITTEN NOTICE SHALL BE SUBMITTED TO THE CLARK COUNTY TRAFFIC MANAGEMENT DIVISION THAT WORK IS BEING COMPLETED AND THE PROPOSED DATE OF COMPLETION.
19. ALL OBLITERATED PAVEMENT MARKINGS AND SIGNS SHALL BE REPLACED WITH COUNTY APPROVED EQUAL.
20. THE CONTRACTOR SHALL BE RESPONSIBLE FOR LOCATING AND PROTECTING ALL UNDERGROUND AND AERIAL UTILITIES AND INFRASTRUCTURES LIKELY TO BE AFFECTED BY HIS WORK. THE LOCATIONS OF UNDERGROUND UTILITIES SHOWN ON THE PLANS ARE APPROXIMATE ONLY. ANY DAMAGE TO EXISTING UTILITIES SHALL BE RESPONSIBILITY OF THE CONTRACTOR AND SHALL BE REPAIRED PROMPTLY IN A MANNER SATISFACTORY TO THE UTILITIES' OWNERS AT THE CONTRACTOR'S EXPENSE.
21. THE CONTRACTOR SHALL BE RESPONSIBLE FOR GROUNDING THE COMPLETE TRAFFIC SIGNAL AND/OR ELECTRICAL SYSTEMS INCLUDING ALL EXISTING POLES, CABINETS, SERVICE PEDESTALS, PULL BOXES, AND ELECTRICAL DEVICES IN ACCORDANCE WITH THE CURRENT NATIONALS ELECTRICAL CODE AND THE UNIFORM STANDARD DRAWINGS.
22. THE CONTRACTOR SHALL NOT REMOVE TREES, SHRUBS, LAWNS, WALLS, FENCES, SIGNS, STRUCTURES, LIGHTS OR ANY OTHER IMPROVEMENTS OUTSIDE THE RIGHT-OF-WAY EXCEPT WHERE REQUIRED TO DO SO BY THE CONTRACT DRAWINGS OR AS DIRECTED BY THE ENGINEER.
23. THE CONTRACTOR SHALL PRESERVE ALL SURVEY MONUMENTS AND PROPERTY STAKES, WHETHER THEY ARE SHOWN ON THE CONTRACT DRAWINGS OR NOT, EXCEPT WHERE THEIR DESTRUCTION IS DETERMINED BY THE CONTRACTING AGENCY TO BE UNAVOIDABLE. MONUMENTS AND STAKES THAT ARE DISTURBED OR DESTROYED BY THE CONTRACTOR'S OPERATIONS WITHOUT CONSENT OF THE CONTRACTING AGENCY SHALL BE REPLACED IN ACCORDANCE WITH ALL APPLICABLE NEVADA REVISED STATUTES AND CLARK COUNTY UNIFORM STANDARD DRAWINGS AND SPECIFICATIONS BY A NEVADA PROFESSIONAL LAND SURVEYOR AT THE SATISFACTION OF THE COUNTY SURVEYOR, AND THE COST FOR SUCH REPLACEMENT SHALL BE PAID BY THE CONTRACTOR.

DEVIATIONS FROM STANDARDS

THERE ARE NO DEVIATIONS FROM APPLICABLE CLARK COUNTY STANDARDS, UNLESS STATED IN THE SPECIFICATIONS.

DEPARTMENT OF DEVELOPMENT SERVICES CIVIL ENGINEERING DIVISION NOTES

1. INSPECTIONS ARE REQUIRED. CALL 24 HOURS IN ADVANCE, 455-4610. YOUR PERMIT, APPROVED PLANS, AND BARRICADE PLANS FOR THIS WORK MUST BE ON THE JOB SITE AT ALL TIMES.
2. EXACT LOCATION OF ALL SAW-CUT LINES SHALL BE DETERMINED IN THE FIELD BY A CLARK COUNTY INSPECTOR.
3. CURB AND GUTTER WITH A GRADE OF LESS THAN 4/10 OF ONE PERCENT SHALL BE CONSTRUCTED BY FORMING. EACH JOINT SHALL BE CHECKED FOR GRADE PRIOR TO CONSTRUCTION AND WATER TESTED AS SOON AS POSSIBLE AFTER CONSTRUCTION.
4. FINAL ASPHALTIC CONCRETE (AC) PAVEMENT SURFACES SHALL BE ONE-HALF (1/2) INCH ABOVE THE LIP OF THE GUTTER (INCLUDING OPEN GRADE).
5. ALL OFF-SITE IMPROVEMENT CONSTRUCTION SHALL CONFORM TO THE LATEST STANDARD SPECIFICATIONS AND STANDARD DRAWINGS CLARK COUNTY AREA NEVADA AND CLARK COUNTY SHALL SUPPLEMENT TO UNIFORM STANDARD DRAWINGS AND SPECIFICATIONS, LATEST REVISION.
6. PRIVATE STREETS, CURB AND GUTTER AND VALLEY GUTTERS REFLECTED ON THESE PLANS ARE TO BE INSPECTED BY A CLARK COUNTY INSPECTOR
7. WHEEL CHAIR RAMPS SHALL BE CONSTRUCTED IN EACH QUADRANT OF AN INTERSECTION PER STANDARD DRAWING 235. EXACT LOCATION OF RAMPS SHALL BE DETERMINED IN THE FIELD BY CLARK COUNTY PUBLIC WORKS INSPECTOR.
8. PROPER SIGNS, BARRIERS, BARRICADES AND LIGHTS SHALL BE PLACED AND MAINTAINED IN ACCORDANCE WITH THE LATEST "MANUAL OF UNIFORM TRAFFIC CONTROL DEVICES FOR STREETS AND HIGHWAYS". TRAFFIC, SCHOOL, OR STREET SIGNS OF ANY NATURE SHALL NOT BE MOVED FOR ANY REASON WITHOUT FIRST COORDINATING WITH THE DEPARTMENT OF DEVELOPMENT SERVICES, CIVIL ENGINEERING DIVISION INSPECTOR AT 455-4610.
9. THIS PLAN DOES NOT AUTHORIZE CLOSURE OF ANY ROAD OR STREET.
10. NO OPEN TRENCH SHALL BE ALLOWED ACROSS ANY STREET OR WITHIN TEN (10') OF ANY TRAVEL-WAY, EXCEPT WHEN WORK IS IN ACTUAL PROGRESS. AREAS COVERED BY ACCEPTABLE STEEL PLATE ARE NOT TO BE CONSTRUED AS TRENCH. NO OPEN TRENCH IS PERMITTED IN EXCESS OF 500 FEET OR LENGTH NECESSARY TO ACCOMMODATE PIPE INSTALLATION IN A SINGLE DAY, WHICH EVER IS GREATER. ALL TRENCH CROSSINGS AND BACKFILL SHALL MEET THE STANDARD SPECIFICATION UNLESS OTHERWISE STATED.
11. A TEMPORARY PATCH IS TO BE IN PLACE AT THE END OF EACH WORK DA WHERE THE BACKFILL IN THE TRENCH HAS BEEN COMPLETED AND PRIOR TO OPENING THE WORK AREA BACK TO TRAFFIC AND IS TO BE MAINTAINED BY THE PERMITEE. A PERMANENT PATCH IS TO BE IN PLACE WITHIN THIRTY (30) DAYS AFTER THE INSTALLATION OF THE TEMPORARY PATCH.
12. COMPACTION TESTS ARE REQUIRED.

CLARK COUNTY FIRE DEPARTMENT BUREAU'S GENERAL NOTES

A. ALL WORK SHALL BE DONE IN STRICT ACCORDANCE WITH THE 2005 CLARK COUNTY FIRE CODE, AND THE 2002 EDITION OF NATIONAL FIRE PROTECTION ASSOCIATION PAMPHLET #24.

B. ON ANY BUILDING CONSTRUCTION, ACCESSIBLE FIRE HYDRANTS SHALL BE INSTALLED BEFORE COMBUSTIBLE MATERIALS ARE DELIVERED TO THE SITE AND CONSTRUCTION COMMENCES. SAID FIRE HYDRANTS SHALL BE IN GOOD WORKING ORDER WITH THE REQUIRED WATER SUPPLY.

C. IF DURING CONSTRUCTION IT BECOMES NECESSARY TO CLOSE ANY CONTROL VALVE OR PLACE A HYDRANT OUT OF SERVICE, THE CLARK COUNTY FIRE DEPARTMENT MUST BE CONTACTED.

D. PAINTING OF CURBS AND/OR STRIPING OF ASPHALT AREAS AND PROTECTION OF HYDRANTS FROM PHYSICAL INJURY SHALL BE PER THE FIRE HYDRANT INSTALLATION SPECIFICATIONS OF THE FIRE PREVENTION BUREAU.

E. NO FIRE HYDRANT SHALL BE LOCATED WITHIN TWENTY-FIVE (25) FEET OF ANY STRUCTURE, OR FIVE (5) FEET OF A DRIVEWAY, POWER POLE, LIGHT STANDARD, OR ANY OTHER OBSTRUCTION. FOR WALL, FENCE AND PLANTER LOCATIONS, A PERIMETER AROUND THE HYDRANT MEASURING A MINIMUM OF THREE (3) FEET FROM ITS EXTERIOR SHALL BE MAINTAINED CLEAR OF ALL OBSTRUCTION AT ALL TIMES.

F. AT ALL TIMES DURING CONSTRUCTION SUITABLE EMERGENCY VEHICLE ACCESS ROADS MUST BE MAINTAINED. ROADWAYS MUST BE SMOOTH, COMPACTED AND CAPABLE OF SUPPORTING THE IMPOSED LOADS OF ALL EMERGENCY VEHICLES.

G. PRIOR TO ACCEPTANCE OF ANY FIRE SERVICE MAIN, A SATISFACTORY HYDROSTATIC TEST WITH PIPING JOINTS UNCOVERED MUST BE CONDUCTED. APPROVED PLANS AND A CONTRACTOR'S MATERIALS AND TEST CERTIFICATE MUST BE PROVIDED AT TIME OF INSPECTION.

H. BLUE REFLECTIVE MARKERS MUST BE INSTALLED BEFORE FINAL HYDRANT ACCEPTANCE CAN BE ATTAINED. [2005 CLARK COUNTY FIRE CODE, SEC. 901.4.3]

I. AUTHORIZED FIRE HYDRANTS FOR THIS PROJECT ARE:

A. KENNEDY – GUARDIAN MODELS K81A AND K81D
B. MUELLER – SUPER CENTURION 250 MODEL A-423
C. CLOW – MEDALLION MODEL F-2546LVD
D. TROY VALVE – PATRIOT MODEL PT8100N NEVADA HYDRANT

FOR EXAMPLE ONLY - VERIFY CONTENT WITH APPROPRIATE AGENCIES

Avoid overhead power line contact. It's easily. Call before you OVERHEAD 1-702-227-2929
Call before you Dig. Avoid cutting underground utility lines. It's easily. Call 811

LAS VEGAS VALLEY WATER DISTRICT
1001 S. VALLEY VIEW BOULEVARD
LAS VEGAS, NEVADA 89153
(702) 870-2011

VERIFY SCALE
1/2 0 1/2 1
BAR REPRESENTS ONE AND ONE-HALF INCHES ON ORIGINAL

SCALE NONE

XXXXXXXXXXXXXXXXXXXX
XXXXXXXXXXXXXXXXXXXX

CLARK COUNTY GENERAL NOTES

DRAWN BY:	CHECKED BY:	RECOMMENDED BY:	ACCEPTED BY:
XXXXXXXXXX	XXXXXXXXXX	DATE	DATE
XXXXXXXXXX	XXXXXXXXXX	XXXXXXXXXX	XXXXXXXXXX

REVISIONS:

CONTRACT NUMBER
CXXXX
DRAWING NUMBER G3
SHEET XX OF XX

CITY OF LAS VEGAS FIRE DEPARTMENT NOTES

1. ALL WORK SHALL BE DONE IN STRICT ACCORDANCE WITH THE CITY OF LAS VEGAS FIRE DEPARTMENT'S ORDINANCE #5667, "HYDRANT SPECIFICATIONS", AND "HYDRANT INSTALLATION SPECIFICATION".
2. AUTHORIZED FIRE HYDRANTS FOR THIS PROJECT ARE:
   A. KENNEDY – GUARDIAN MODELS K81A AND K81D
   B. MUELLER – SUPER CENTURION 250 MODEL A-423
   C. CLOW – MEDALLION MODEL F-2546LVD
   D. TROY VALVE – PATRIOT MODEL PT8100N NEVADA HYDRANT
   E. U.S. PIPE – METROFLOW/M-03
3. ON ANY RESIDENTIAL OR COMMERCIAL INSTALLATIONS FIRE HYDRANTS SHALL BE INSTALLED AND FIRE APPARATUS ACCESS ROADS SHALL BE MAINTAINED BEFORE COMMENCEMENT OF ANY COMBUSTIBLE CONSTRUCTION. ALL FIRE HYDRANTS SHALL BE IN GOOD WORKING ORDER AND SHALL BE CAPABLE OF DELIVERING THE REQUIRED FIRE FLOW.
4. TO IDENTIFY THE FIRE HYDRANT LOCATIONS, CONTRACTOR SHALL PLACE A BLUE REFLECTIVE MARKER AT THE CENTERLINE OF STREET ADJACENT TO THE FIRE HYDRANTS AS REQUIRED BY ORDINANCE #5667.
5. ALL UNDERGROUND INSPECTIONS, PRESSURE AND FLUSH VERIFICATIONS OF ALL FIRE HYDRANTS AND FIRE LINES, SHALL BE CONDUCTED BEFORE COVERING THE LINES. CALL THE CITY OF LAS VEGAS INSPECTION HOT–LINE AT 229–2071 TO REQUEST AN INSPECTION BY THE CITY OF LAS VEGAS FIRE DEPARTMENT.
6. PAINTING OF THE CUBS AND FIRE HYDRANTS AND ALL OTHER WORK NECESSARY AS REQUIRED BY ORDINANCE #5667, FOR THE PROTECTION OF FIRE HYDRANTS FROM PHYSICAL DAMAGE, SHALL BE COMPLETED BEFORE APPROVAL BY THE CITY OF LAS VEGAS FIRE DEPARTMENT.
7. A PERMIT IS REQUIRED FROM THE CITY OF LAS VEGAS FIRE DEPARTMENT FOR THE ON–SITE WATER LINES AND FIRE HYDRANTS. THE PERMIT AND CONTRACTOR'S MATERIAL AND TEST CERTIFICATE FOR UNDERGROUND PIPING FORM SHALL BE OBTAINED FROM THE FIRE PROTECTION ENGINEER BEFORE COMMENCEMENT OF WORK.
8. PRIVATE FIRE HYDRANTS SHALL BE PAINTED RED.
9. PRIOR TO THE FINAL OCCUPANCY, A FLOW TEST MUST BE WITNESSED BY THE CITY OF LAS VEGAS FIRE DEPARTMENT TO VERIFY AVAILABILITY OF THE REQUIRED FIRE FLOW.
10. ALL ON–SITE UNDERGROUND WATER MAINS AND MATERIALS SHALL BE U.L. LISTED, A.W.W.A. APPROVED, AND SHALL BE RATED FOR THE APPROPRIATE WORKING PRESSURE.
11. FIRE HYDRANTS SPACING SHALL BE:
    RESIDENTIAL – 500 FEET UNSPRINKLERED; 600 FEET SPRINKLERED.
    COMMERCIAL – 300 FEET UNSPRINKLERED; 400 FEET SPRINKLERED.
12. WHERE NEW WATER MAINS ARE EXTENDED ALONG STREETS OR NEW STREETS ARE INSTALLED WHERE FIRE HYDRANTS ARE NOT NEEDED FOR PROTECTION OF THE STRUCTURES, FIRE HYDRANTS SHALL BE INSTALLED AT MAXIMUM 1,000 FOOT SPACING, TO PROVIDE FOR TRANSPORTATION HAZARDS. WHERE STREETS ARE PROVIDED WITH MEDIAN DIVIDERS OR HAVE FOUR OR MORE TRAFFIC LANES AND HAVE A TRAFFIC COUNT OF MORE THAN 30,000 PER DAY, HYDRANTS ARE REQUIRED ON EACH SIDE OF THE STREET SPACED AT 500 FEET ON AN ALTERNATING BASIS.
13. NO FIRE HYDRANTS SHALL BE LOCATED WITHIN THE REQUIRED RADIUS OF A CUL–DE–SAC OR WITHIN 20 FEET OF THE PERIMETER OF THE RADIUS OF THE CUL–DE–SAC.
14. NO FIRE HYDRANTS SHALL BE LOCATED WITHIN 6 FEET OF ANY CURB RETURN, DRIVEWAY, POWER POLE, STREETLIGHT OR ANY OTHER OBSTRUCTION.
15. THE MAXIMUM DISTANCE FROM A FIRE HYDRANT TO A ONE–TWO FAMILY DWELLING SHALL NOT EXCEED 300 FEET, AS MEASURED BY AN APPROVED ROUTE.
16. THE MAXIMUM DISTANCE FROM A FIRE HYDRANT TO A FIRE DEPARTMENT CONNECTION (FDC) SHALL NOT EXCEED 100 FEET, AS MEASURED BY AN APPROVED ROUTE.
17. THE MAXIMUM DISTANCE FROM A FIRE HYDRANT TO THE END OF A DEAD–END STREET SHALL NOT EXCEED 200 FEET.
18. TWO SOURCES OF SUPPLY ARE REQUIRED WHENEVER THERE ARE 4 OR MORE FIRE HYDRANTS/SPRINKLER LEAD–INS INSTALLED ON A SINGLE SYSTEM. SECTIONAL CONTROL VALVES SHALL BE INSTALLED SO THAT NO MORE THAN 2 FIRE HYDRANTS CAN BE OUT OF SERVICE DUE TO A BREAK IN A WATER MAIN.
19. ALL FIRE APPARATUS ACCESS ROADS SHALL BE PAVED TO PROVIDE ALL–WEATHER DRIVING CAPABLITIES, AND SHALL BE DESIGNED AND MAINTAINED TO SUPPORT THE IMPOSED LOADS OF THE FIRE APPARATUS.
20. THE GRADIENT FOR THE FIRE APPARATUS ACCESS ROADS SHALL NOT EXCEED 12%. ANGLES OF APPROACH AND ANGLES OF DEPARTURE SHALL NOT EXCEED 6% FOR 25 FEET PRIOR TO OR AFTER THE GRADE CHANGE. ADJACENT TO THE STRUCTURES GRADIENT SHALL NOT EXCEED 6%.
21. THE TURNING RADIUS OF THE FIRE APPARATUS ACCESS ROADS SHALL BE NO LESS THAN 52 FEET OUTSIDE AND 28 FEET INSIDE TURNING RADIUS.
22. VERTICAL CLEARANCE OF ALL FIRE APPARATUS ACCESS ROADS SHALL BE NOT LESS THAN 13 FEET 6 INCHES.
23. FIRE DEPARTMENT ACCESS ROADS IN ALL RESIDENTIAL DEVELOPMENTS (EXCEPT FOR THE APARTMENT BUILDINGS) SHALL HAVE A MINIMUM UNOBSTRUCTED WIDTH OF NOT LESS THAN 36 FEET FLOW LINE TO THE FLOW LINE (THIS WIDTH MAY BE REDUCED BY 24 FEET, IF ALL BUILDINGS FRONTING THE STREET ARE SPRINKLERED) FOR MAIN RESIDENTIAL STREETS, WITH PARKING PERMITTED ON BOTH SIDES OF THE STREET. PRIVATE DRIVE AISLES, DRIVEWAYS, ETC. SHALL BE ALLOWED TO BE REDUCED TO A MINIMUM WIDTH OF 24 FEET FLOW LINE TO THE FLOW LINE WHEN SERVING NO MORE THAN 6 RESIDENCES, AND WHEN ON STREET PARKING IS DISALLOWED.
24. ALL FIRE APPARATUS ACCESS ROADS IN COMMERCIAL DEVELOPMENTS AND APARTMENT COMPLEXES SHALL HAVE A MINIMUM UNOBSTRUCTED WIDTH OF NOT LESS THAN 24 FEET (FLOW LINE TO THE FLOW LINE), PROVIDED NO PARKING IS ALLOWED ON EITHER SIDE; 32 FEET (FLOW LINE TO THE FLOW LINE), IF PARALLEL PARKING IS ALLOWED ON ONE SIDE ONLY; AND 40 FEET (FLOW LINE TO FLOW LINE), IF PARALLEL PARKING IS ALLOWED ON BOTH SIDES. THESE WIDTHS MAY BE REDUCED BY 4 FEET IF ALL BUILDINGS ARE SPRINKLERED.
25. A FIRE DEPARTMENT ACCESS ROAD SHALL EXTEND TO WITHIN 50 FEET OF A SINGLE EXTERIOR DOOR PROVIDING ACCESS TO THE INTERIOR OF THE BUILDING.
26. A FIRE APPARATUS ACCESS ROAD SHALL BE REQUIRED WHEN ANY PORTION OF AN EXTERIOR WALL OF THE FIRST STORY IS LOCATED MORE THAN 150 FEET FROM A FIRE DEPARTMENT VEHICLE ACCESS. THIS DISTANCE COULD BE INCREASED TO 250 FEET IF THE BUILDING IS SPRINKLERED.
27. APPROVED SECONDARY FIRE APPARATUS ACCESS SHALL BE PROVIDED FOR 100 OR MORE DWELLING UNITS, ROAD(S) WITH DEAD–ENDS OR WITH A SINGLE POINT OF ACCESS IN EXCESS OF 600 FEET, AND FOR ALL COMMERCIAL, INDUSTRIAL, AND MULTI–FAMILY RESIDENTIAL DEVELOPMENTS.
28. ALL DEAD–END FIRE APPARATUS ACCESS ROADS AND OR FIRE LANES, PUBLIC OR PRIVATE, IN EXCESS OF 150 FEET IN LENGTH SHALL BE PROVIDED WITH AN APPROVED TURN AROUND AREA HAVING A MINIMUM DIAMETER OF 81 FEET.
29. ALL FIRE APPARATUS ACCESS ROADS SHALL BE MARKED BY PLACING APPROVED SIGNS AT THE START OF THE DESIGNATED FIRE LANE, ONE SIGN AT THE END OF THE FIRE LANE AND WITH SIGNS AT INTERVALS 100 FEET ALONG ALL DESIGNATED FIRE LANES. SIGNS TO BE PLACED ON BOTH SIDES OF AN ACCESS ROADWAY IF NEEDED TO PREVENT PARKING ON EITHER SIDE. SIGNS TO BE INSTALLED NO HIGHER THAN 10 FEET OR LESS THAN 6 FEET FROM ROADWAY LEVEL. THE CURB IMMEDIATELY UNDER THE PAVEMENT OR CEMENT IF A CURB IS NOT PROVIDED SHALL BE PAINTED WITH A RED WEATHER RESISTANT PAINT IN ADDITION TO THE SIGNS.
30. ELECTRICALLY CONTROLLED ACCESS GATES SHALL BE PROVIDED WITH AN APPROVED EMERGENCY VEHICLE DETECTOR/RECEIVER SYSTEM. SAID SYSTEM SHALL BE INSTALLED IN ACCORDANCE WITH THE CITY OF LAS VEGAS GUIDELINES FOR AUTOMATIC EMERGENCY VEHICLE ACCESS GATES.

DEVIATIONS FROM STANDARDS

THERE ARE NO DEVIATIONS FROM APPLICABLE CITY OF LAS VEGAS STANDARDS, UNLESS STATED IN THE SPECIFICATIONS.

CITY OF LAS VEGAS GENERAL NOTES

1. ALL CONSTRUCTION AND MATERIALS SHALL BE IN ACCORDANCE WITH THE "UNIFORM STANDARD SPECIFICATIONS FOR PUBLIC WORKS CONSTRUCTION OFF–SITE IMPROVEMENTS, CLARK COUNTY AREA NEVADA," LATEST ISSUE; THE "UNIFORM STANDARD DRAWINGS FOR PUBLIC WORKS CONSTRUCTION, CLARK COUNTY AREA NEVADA," LATEST REVISED EDITION; THE "SUMMERLIN IMPROVEMENTS STANDARDS" FOR WORK IN THE SUMMERLIN AREA; AND OTHER APPLICABLE APPROVED STANDARDS ISSUED BY THE CONTROLLING AGENCY; THE UNIFORM BUILDING CODE; AND ALL LOCAL CITY CODES AND ORDINANCES APPLICABLE, EXCEPT AS NOTED ON THIS SHEET AS "DEVIATIONS FROM STANDARDS."
2. THE EXISTENCE AND LOCATION OF ANY OVERHEAD OR UNDERGROUND UTILITY LINES, PIPES, OR STRUCTURES SHOWN ON THESE PLANS ARE OBTAINED BY A RESEARCH OF THE AVAILABLE RECORDS. EXISTING UTILITIES AS SHOWN FROM CLV PLANS LIBRARY ARE APPROXIMATE AND FOR RECORD PURPOSES. EXISTING UTILITIES ARE LOCATED ON PLANS ONLY FOR THE CONVENIENCE OF THE CONTRACTOR. EXISTING UTILITY SERVICE LATERALS MAY NOT BE SHOWN ON THE PLANS. THE CONTRACTOR SHALL, AT HIS OWN EXPENSE, LOCATE ALL UNDERGROUND AND OVERHEAD INTERFERENCE'S WHICH MAY AFFECT HIS OPERATION DURING CONSTRUCTION AND SHALL TAKE ALL NECESSARY PRECAUTIONS TO AVOID DAMAGE TO SAME. THE CONTRACTOR SHALL USE EXTREME CAUTION WHEN WORKING NEAR OVERHEAD UTILITIES SO AS TO SAFELY PROTECT ALL PERSONNEL AND EQUIPMENT, AND SHALL BE RESPONSIBLE FOR ALL COST AND LIABILITY IN CONNECTION THEREWITH.
3. THE CONTRACTOR SHALL TAKE ALL PRECAUTIONARY MEASURES NECESSARY TO PROTECT EXISTING UTILITY LINES, STRUCTURES AND STREET IMPROVEMENTS WHICH ARE TO REMAIN IN PLACE, FROM DAMAGE, AND ALL SUCH IMPROVEMENTS OR STRUCTURES DAMAGED BY THE CONTRACTOR'S OPERATIONS SHALL BE REPAIRED OR REPLACED SATISFACTORY TO THE CITY ENGINEER AND OWNING UTILITY COMPANY AT THE EXPENSE OF THE CONTRACTOR.
4. ALL CONSTRUCTION SHALL BE AS SHOWN ON THESE PLANS, ANY REVISIONS SHALL HAVE THE PRIOR WRITTEN APPROVAL OF THE CITY ENGINEER.
5. TYPE V CEMENT SHALL BE USED IN ALL OFF–SITE CONCRETE WORK. CONCRETE TO BE 3000 P.S.I. MINIMUM @ 28 DAYS. MIX DESIGNS TO BE APPROVED BY THE CITY, PRIOR TO THE USE ON THE PROJECT.
6. PERMITS ARE REQUIRED FOR ANY WORK IN THE PUBLIC RIGHT–OF–WAY. THE CONTRACTOR SHALL SECURE ALL PERMITS AND INSPECTIONS REQUIRED FOR THIS CONSTRUCTION.
7. EXPANSION JOINTS REQUIRED, MAXIMUM EVERY 300' IN EXTRUDED–TYPE CURB.
8. AC PAVEMENT TO BE ONE–HALF INCH (1/2") ABOVE LIP OF ALL GUTTERS AFTER COMPACTION, EXCEPT AT SIDEWALK RAMPS AND CROSS GUTTERS.
9. CURB AND GUTTER FOUND TO BE UNACCEPTABLE TO THE CITY OF LAS VEGAS SHALL BE REMOVED AND REPLACED PER STANDARD DRAWING 216.
10. SIDEWALK RAMPS SHALL BE CONSTRUCTED IN EACH QUADRANT OF AN INTERSECTION PER STANDARD DRAWING 230. EXACT LOCATION OF RAMPS MAY BE ADJUSTED IN THE FIELD BY A CITY INSPECTOR.
11. CONTRACTOR SHALL PROVIDE ALL NECESSARY HORIZONTAL AND VERTICAL TRANSITIONS BETWEEN NEW CONSTRUCTION AND EXISTING SURFACES TO PROVIDE FOR PROPER DRAINAGE AND FOR INGRESS AND EGRESS TO NEW CONSTRUCTION. THE EXTENT OF TRANSITIONS TO BE AS SHOWN ON PLANS.
12. ALL GRADING WORK SHALL CONFORM TO THE SOILS REPORT AS PREPARED BY THE SOILS ENGINEER APPROVED BY THE CITY ENGINEER, AND AS SHOWN ON THESE PLANS.
13. EXACT LOCATION OF ALL SAWCUT LINES MAY BE ADJUSTED OR DETERMINED IN THE FIELD BY A CITY OF LAS VEGAS ENGINEER IF LOCATION ON PLANS IS NOT CLEARLY SHOWN, OR EXISTING PAVEMENT CONDITION REQUIRES RELOCATION.
14. THE CONTRACTOR SHALL TAKE ALL PRECAUTIONS NECESSARY TO PROTECT EXISTING PERMANENT SURVEY MONUMENTS. ANY MONUMENTS DISTURBED SHALL BE REPLACED AND ADJUSTED PER AVAILABLE RECORDS IN ACCORDANCE WITH N.R.S. NO. 625.550 AND CITY OF LAS VEGAS TITLE 18, APPENDIX D.
15. UTILITY COMPANY METER BOXES, MANHOLE LIDS, VALVE COVERS, ETC., SHALL BE LOCATED OUT OF DRIVEWAYS, DRIVEWAY APRONS, FLOWLINES, AND CROSS GUTTERS UNLESS WRITTEN APPROVAL IS GRANTED BY THE UTILITY COMPANY AND THE CITY ENGINEER.
16. WALL NOTES:
    ALL WALLS, NEW OR EXISTING, ARE ONLY SHOWN ON CIVIL PLANS FOR THE PURPOSE OF REVIEWING GRADING RELATIONSHIPS; FLOOD CONTROL AND SIGHT DISTANCE AT INTERSECTIONS. NEW WALLS REQUIRE A SEPARATE PERMIT AND INSPECTION BY THE BUILDING DEPARTMENT.
17. ASPHALT MIX DESIGN MUST BE SUBMITTED AND APPROVED BY THE CITY ENGINEER PRIOR TO THE PLACEMENT OF ASPHALT WITHIN CITY RIGHT OF WAY.
18. CONTRACTOR SHALL ADJUST ALL NEW AND EXISTING INLETS, VALVE BOXES, MANHOLE RIMS, AND SEWER CLEAN OUTS, ETC., TO FINISH GRADE AS APPLICABLE WHETHER OR NOT THEY ARE SHOWN ON THE PLANS.
19. MATERIALS, HANDLING AND PLACEMENT OF PORTLAND CEMENT CONCRETE SHALL BE IN ACCORDANCE WITH APPLICABLE SECTIONS OF NDOT OR THE CLARK COUNTY AREA SPECIFICATIONS (AS APPLICABLE) AND THE PLANS AND DETAILS SHOWN HEREON.
20. WHEN INSTALLING UNDERGROUND FACILITIES THAT REQUIRE UNDERGROUND LOCATING DEVICES SUCH AS MARKER BALLS, LOCATING RIBBON, ETC, THE CONTRACTOR SHALL PROVIDE WRITTEN DOCUMENTATION TO OFFSITE INSPECTION AND TESTING CERTIFYING THAT ALL DEVICES HAVE BEEN PLACED AND VERIFIED TO BE IN GOOD WORKING CONDITION PRIOR TO THE CONSTRUCTION OF ANY ROAD BASE.
21. SANITARY SEWER AND STORM DRAIN FINAL LOCATION MAP(S) SHALL BE PROVIDED TO THE OFFSITE INSPECTION AND TESTING SECTION PRIOR TO PROJECT ACCEPTANCE. THE MAP(S) SHALL INCLUDE THE HORIZONTAL AND VERTICAL (INVERT) LOCATION OF PUBLIC SEWER MANHOLES, STORM DRAIN MANHOLES, STORM DRAIN LATERALS AT THE CONNECTION TO THE STORM DRAIN MAIN AND AT THE CONNECTION TO A DROP INLET, AND THE CONNECTION OF SEWER SERVICE LATERALS TO THE SEWER MAIN AND WHERE THE SEWER SERVICE LATERALS EXITS THE PUBLIC RIGHT–OF–WAY. THE LOCATION SHALL BE DESCRIBED BY STATE PLANE COORDINATES WHICH SHALL BE BASED ON THE "NEVADA COORDINATE SYSTEM OF 1983, EAST ZONE" AS DEFINED BY THE NEVADA REVISED STATUTES CHAPTER 327, AND TIED TO THE CITY OF LAS VEGAS VERTICAL CONTROL BENCHMARK NETWORK. COORDINATES MUST BE CERTIFIED BY A NEVADA PROFESSIONAL LAND SURVEYOR TO HAVE POSITIONAL CERTAINTIES OF +/– 0.1 METER (+/– 0.3 FEET). A SEPARATE ELECTRONIC COMMA DELIMITED FILE FOR THE SANITARY SEWER AND STORM DRAIN COORDINATES SHALL ALSO ACCOMPANY THE SANITARY SEWER AND STORM DRAIN FINAL LOCATION MAP(S).
22. SANITARY SEWER SERVICE LATERALS REQUIRE THE INSTALLATION OF A MARKER BALL AT THE CONNECTION OF THE EXISTING SEWER SERVICE LATERAL TO THE SEWER MAIN AND WHERE THE SEWER SERVICE LATERAL EXITS THE PUBLIC RIGHT–OF–WAY. STORM DRAIN LATERALS REQUIRE THE INSTALLATION OF A MARKER BALL AT THE CONNECTION OF THE STORM DRAIN LATERAL TO THE STORM DRAIN MAIN AND WHERE THE STORM DRAIN LATERAL EXITS THE PUBLIC RIGHT–OF–WAY OR WHERE THE STORM DRAIN LATERAL CONNECTS TO A DROP INLET. THE MARKER BALL SHALL BE 3M 4" MARKER BALL 1404–XR OR APPROVED EQUAL.
23. CCTV VIDEO INSPECTION IS REQUIRED FOR ALL SEWER AND STORM DRAINS. THE CCTV VIDEO INSPECTIONS NEED TO BE PERFORMED PER THE DESIGN AND CONSTRUCTION STANDARDS FOR WASTEWATER COLLECTION SYSTEMS LATEST ADDITION.
24. A SEPARATE BORING PERMIT IS REQUIRED FOR ALL BORING ACTIVITIES.

CITY OF LAS VEGAS SEWER NOTES

1. ALL CONSTRUCTION AND MATERIALS SHALL BE IN ACCORDANCE WITH THE LATEST EDITION OF THE DESIGN AND CONSTRUCTION STANDARDS FOR WASTEWATER COLLECTION SYSTEMS AND THE UNIFORM STANDARD SPECIFICATIONS FOR PUBLIC WORKS' CONSTRUCTION OFF–SITE IMPROVEMENTS, CLARK COUNTY AREA, NEVADA, AS AMENDED. IT WILL BE THE RESPONSIBILITY OF THE CONTRACTOR TO BE AWARE OF THE CONTENTS OF THE ABOVE SPECIFICATIONS.
2. IT SHALL BE THE CONTRACTOR'S RESPONSIBILITY TO PERFORM CONSTRUCTION AS PER PLANS. ANY ADDITIONS, DELETIONS, OR CHANGES SHALL FIRST MEET WITH THE APPROVAL OF THE CITY ENGINEER.
3. CHISEL "S" OR "G" IN CURBS WHERE SEWER OR GAS LATERALS PASS UNDER THE CURB.
4. POLYVINYL (PVC) SEWER PIPE SHALL MEET ASTM D–3034 SDR 35 SPECIFICATIONS, INSTALLED WITH SAND BEDDING AND BACKFILL OF TYPE II AGGREGATE BASE.
5. ALL MANHOLES PAVED IN STREETS EIGHTY (80') FOOT R/W AND LARGER SHALL USE CONCRETE COLLARS. STREETS LESS THAN EIGHTY (80') FOOT R/W WILL REQUIRE RETROFIT IF PAVING DOES NOT CONFORM TO CITY STANDARDS AT THE MANHOLE.
6. TEE SADDLES SHALL BE USED TO CONNECT SEWER LATERALS TO EXISTING MAIN LINES UP TO TWELVE INCH (12") DIAMETER. CONNECTIONS TO FIFTEEN INCH (15") OR LARGER MAINS SHALL REQUIRE SPECIAL PROCEDURES. IN LINE "Y"S" SHALL BE USED ON LINES TWELVE INCHES (12") AND ABOVE.
7. WATER MAINS SHALL BE PROTECTED IN ACCORDANCE WITH CLV STANDARDS WHENEVER A SEWER MAIN CROSSES OVER A WATER MAIN OR THE SEWER IS LESS THAN EIGHTEEN INCHES (18") UNDER A WATER MAIN.
8. ALL CONTRACTORS INSTALLING SEWER MAINS THAT WILL BE UNDER THE JURISDICTION OF THE CITY OF LAS VEGAS MUST BE STATE OF NEVADA CLASS "A" CONTRACTORS.
9. THE CITY OF LAS VEGAS WILL NOT ACCEPT ANY SEWER MAINS WHICH HAVE A VERTICAL DEFLECTION OF MORE THAN ONE TENTH (0.1) OF A FOOT FROM THE APPROVED CONSTRUCTION PLANS AT ANY LOCATION. SEWER MAINS FOUND TO EXCEED THIS TOLERANCE WILL HAVE TO BE REPAIRED OR REMOVED OR REPLACED TO THE SATISFACTION OF THE CITY ENGINEER PRIOR TO ACCEPTANCE BY THE CITY OF LAS VEGAS.
10. INSTALLATION OF DEFLECTED SEWER REQUIRES THE USE OF C–900 PVC PIPE WHICH ALLOWS FOR PIPE DEFLECTION AT THE JOINTS.

CITY OF LAS VEGAS GRADING NOTES

1. IN THE EVENT THAT ANY UNFORESEEN CONDITIONS NOT COVERED BY THESE NOTES ARE ENCOUNTERED DURING GRADING OPERATIONS, THE OWNER/ENGINEER SHALL BE IMMEDIATELY NOTIFIED FOR DIRECTION.
2. IT SHALL BE THE RESPONSIBILITY OF THE CONTRACTOR TO PERFORM ALL NECESSARY CUTS AND FILLS WITHIN THE LIMITS OF THIS PROJECT AND THE RELATED OFF–SITE WORK, SO AS TO GENERATE THE DESIRED SUBGRADE, FINISH GRADES AND SLOPES SHOWN.
3. CONTRACTOR SHALL TAKE FULL RESPONSIBILITY FOR ALL EXCAVATION. ADEQUATE SHORING SHALL BE DESIGNED AND PROVIDED BY THE CONTRACTOR TO PREVENT UNDERMINING OF ANY ADJACENT FEATURES OR FACILITIES AND/OR CAVING OF THE EXCAVATION.
4. THE CONTRACTOR IS WARNED THAT AN EARTHWORK BALANCE IS NOT NECESSARILY THE INTENT OF THIS PROJECT. ANY ADDITIONAL MATERIAL REQUIRED OR LEFTOVER MATERIAL FOLLOWING EARTHWORK OPERATIONS BECOMES THE RESPONSIBILITY OF THE CONTRACTOR.
5. THE GRADING CONTRACTOR IS RESPONSIBLE TO COORDINATE WITH THE OWNER TO PROVIDE FOR THE REQUIREMENTS OF THE PROJECT STORM WATER POLLUTION PREVENTION PLAN (SWPPP) AND ASSOCIATED PERMIT.
6. CONTRACTOR SHALL GRADE TO THE LINES AND ELEVATIONS SHOWN ON THE PLANS WITHIN THE FOLLOWING HORIZONTAL AND VERTICAL TOLERANCES AND DEGREES OF COMPACTION, IN THE AREAS INDICATED:

	HORIZONTAL	VERTICAL	COMPACTION
A. PAVEMENT AREA SUBGRADE	0.1'+	+0.0' TO –0.1'	SEE SOILS REPORT
B. ENGINEERED FILL	0.5'+	+0.1' TO –0.1'	SEE SOILS REPORT

   COMPACTION TESTING WILL BE PERFORMED BY THE OWNER OR HIS REPRESENTATIVE.
7. ALL CUT AND FILL SLOPES SHALL BE PROTECTED UNTIL EFFECTIVE EROSION CONTROL HAS BEEN ESTABLISHED.
8. THE USE OF POTABLE WATER WITHOUT A SPECIAL PERMIT FOR BUILDING OR CONSTRUCTION PURPOSES INCLUDING CONSOLIDATION OF BACKFILL OR DUST CONTROL IS PROHIBITED. THE CONTRACTOR SHALL OBTAIN ALL NECESSARY PERMITS FOR CONSTRUCTION WATER.
9. THE CONTRACTOR SHALL MAINTAIN THE STREETS, SIDEWALKS AND ALL OTHER PUBLIC RIGHT–OF–WAY IN A CLEAN, SAFE AND USABLE CONDITION. ALL SPILLS OF SOIL, ROCK OR CONSTRUCTION DEBRIS SHALL BE PROMPTLY REMOVED FROM THE PUBLICLY OWNED PROPERTY DURING CONSTRUCTION AND UPON COMPLETION OF THE PROJECT. ALL ADJACENT PROPERTY, PRIVATE OR PUBLIC SHALL BE MAINTAINED IN A CLEAN, SAFE AND USABLE CONDITION.
10. IN THE EVENT THAT ANY TEMPORARY CONSTRUCTION ITEM IS REQUIRED THAT IS NOT SHOWN ON THESE DRAWINGS, THE OWNER AGREES TO PROVIDE AND INSTALL SUCH ITEM AT HIS OWN EXPENSE AND AT THE DIRECTION OF THE CITY ENGINEER. TEMPORARY CONSTRUCTION INCLUDES DITCHES, BERMS, ROAD SIGNS AND BARRICADES, ETC.

APPROVED BY:

APPROVAL OF THESE PLANS BY THE CITY OF LAS VEGAS IS LIMITED TO THOSE IMPROVEMENTS CONSTRUCTED IN THE DEDICATED RIGHTS–OF–WAY AND/OR DEDICATED EASEMENTS. THIS APPROVAL DOES NOT AUTHORIZE THE CONSTRUCTION OF ANY IMPROVEMENTS THAT DEVIATE FROM ADOPTED STANDARDS AND/OR SPECIFICATIONS EXCEPT THOSE SPECIFICALLY LISTED UNDER "DEVIATIONS FROM STANDARDS". THE ENGINEER SHALL RESOLVE ANY DEVIATION OTHER THAN THOSE LISTED IN "DEVIATIONS FROM STANDARDS" IN FAVOR OF THE "UNIFORM STANDARD DRAWINGS AND SPECIFICATIONS CLARK COUNTY AREA NEVADA".

CHERI EDELMAN, PE. #11514, CITY ENGINEER — DATE

CITY OF LAS VEGAS FIRE DEPARTMENT — DATE

DOUG RANKIN, AICP, PLANNING MANAGER — DATE

THIS PLAN MEETS THE APPLICABLE STANDARDS OF THE PLANNING AND DEVELOPMENT DEPARTMENT.

CLV DWG # _____

FOR EXAMPLE ONLY – VERIFY CONTENT WITH APPROPRIATE AGENCIES

LAS VEGAS VALLEY WATER DISTRICT

VERIFY SCALE
1/2 0 1/2 1
BAR REPRESENTS ONE AND ONE–HALF INCHES ON ORIGINAL

XXXXXXXXXXXXXXXXXXXX
XXXXXXXXXXXXXXXXXXXX

SCALE
HORIZ. = XX
VERT. SCALE
1" = X'

DRAWN BY: XXXXXXXXXXXXXXXX — XX/XX/XX
CHECKED BY: XXXXXXXXXXXXXXXX — XX/XX/XX
RECOMMENDED BY: LVWD SENIOR CIVIL ENGINEER — DATE
ACCEPTED BY: DESIGN MANAGER — DATE

REVISIONS:

CONTRACT NUMBER
CXXXX

DRAWING NUMBER G4
SHEET XX OF XX

FOR EXAMPLE ONLY - VERIFY CONTENT WITH APPROPRIATE AGENCIES

DEVIATIONS FROM STANDARDS

THERE ARE NO DEVIATIONS FROM APPLICABLE CITY OF LAS VEGAS STANDARDS, UNLESS STATED IN THE SPECIFICATIONS.

CITY OF LAS VEGAS TRAFFIC SIGNAL NOTES

1. ALL WORK PERFORMED ON ANY TRAFFIC SIGNAL COMPONENT MUST BE UNDER THE DIRECT ON-SITE SUPERVISION OF AN IMSA CERTIFIED TECHNICIAN. EFFECTIVE MARCH 30, 2000 THE LEVEL OF CERTIFICATION REQUIRED IS LEVEL I, AND THE LEVEL OF CERTIFICATION REQUIRED SHALL BE INCREASED TO LEVEL II EFFECTIVE MARCH 30, 2001.
2. THE CONTRACTOR SHALL BE RESPONSIBLE FOR DAMAGE TO ALL EXISTING UTILITIES. THE LOCATIONS OF UNDERGROUND UTILITIES AS SHOWN ON THE PLANS ARE APPROXIMATE ONLY. THE CONTRACTOR SHALL NOTIFY ALL UTILITY COMPANIES TO VERIFY IN THE FIELD THE LOCATIONS OF THEIR INSTALLATIONS 72 HOURS PRIOR TO CONSTRUCTION.
   CALL-BEFORE-YOU-OVERHEAD 1-702-227-2929
   CALL-BEFORE-YOU-DIG 1-800-227-2600
3. ALL TRAFFIC SIGNAL INSTALLATIONS SHALL CONFORM TO THE UNIFORM STANDARD DRAWINGS SPECIFICATIONS AND SPECIAL PROVISIONS FOR PUBLIC WORKS' CONSTRUCTION OFF-SITE IMPROVEMENTS, CLARK COUNTY AREA, NEVADA, VOLUMES I AND II, ADOPTED BY THE REGIONAL TRANSPORTATION COMMISSION APRIL 8, 1992 WITH ALL SUBSEQUENT REVISIONS. (REVISIONS THRU MAY 11, 2000)
4. SERVICE SHALL HAVE 1-60 AMP SINGLE POLE BREAKER FOR SIGNAL, AND ONE 40 AMP SINGLE POLE BREAKERS FOR STREET LIGHTS. SERVICE SHALL BE 200 AMP PADMOUNT.
5. LINE SIDE OF METER TO BE WIRED WITH THREE #3/0 AWG THW. LOAD SIDE SHALL BE WIRED WITH FOUR #4 AWG THW (2 BLACK, 2 WHITE) AND ONE #8 AWG THW (GREEN).
6. LUMINAIRES ON ALL SIGNAL POLES SHALL BE 400 WATT HIGH PRESSURE SODIUM CUTOFF (G.E. M400A) WITH MC-111 DISTRIBUTION. EACH LUMINAIRE SHALL HAVE AN INDIVIDUAL 1000 WATT P.E. CONTROL. FOR LUMINAIRES THERE SHALL BE 2(TWO)-#4 AWG THW CONDUCTOR FROM THE SERVICE TO THE CABINET. IN THE CABINET, THE #4 AWG THW CONDUCTORS SHALL BRANCH OFF INTO #10 AWG THW CONDUCTORS INDIVIDUALLY FUSED WITH 10 AMP FUSES. THERE SHALL BE NO SPLICES BETWEEN THE CABINET AND LUMINAIRE FIXTURES.
7. THE INTERNALLY ILLUMINATED STREET NAME SIGNS SHALL BE WIRED TO THE LUMINAIRES PHOTO CELL FOR CONTROL WITH #10 AWG THW COPPER STRANDED WIRE (TYPICAL). IN THE EVENT THERE IS NO LUMINAIRE ON THE TRAFFIC SIGNAL POLE, THE 1000 WATT P.E. CONTROL SHALL BE MOUNTED ON THE POLE CAP.
8. CHECK CONDUIT AND CABLE SCHEDULE FOR CONDUIT, CABLE, AND WIRE SIZE. VERIFY ALL EXISTING CONDUIT RUNS.
9. ALL PULLBOXES SHALL BE IN ACCORDANCE WITH UNIFORM STANDARD DRAWINGS NO. 404.110, NO. 404.120, AND NO. 404.130.
10. TRAFFIC SIGNAL CABLE SHALL BE 15 OR 25 CONDUCTOR #14 AWG SOLID (TYPICAL) CABLE AND SHALL CONFORM TO IMSA SPEC. NO. 20-1.
11. PEDESTRIAN PUSH BUTTONS SHALL BE AUDIBLE TACTILE TYPE IN ACCORDANCE WITH CITY OF LAS VEGAS SPECIAL PROVISIONS TO SECTION 623 OF THE CCA USS. PUSH BUTTON SIGNS SHALL BE 9" X 12" WITH FULL MOUNTING BRACKETS. ALL PUSH BUTTONS TO BE MOUNTED 36" ABOVE SIDEWALK. THE MAXIMUM HORIZONTAL REACH DISTANCE IS TO BE 24". SIDEWALK RAMPS WILL BE ACCORDING TO U.S.D. No. 235 (1-4) DATED 12-14-00.
12. THE ROUTING AND TERMINATION OF CONDUITS AND THE PLACING OF POLES AND CABINETS SHALL BE AS INDICATED ON THE PLANS. ALL CHANGES SHALL BE APPROVED BY THE ENGINEER.
13. MAST ARM R10-12 SIGNS TO BE ADJACENT (NO GAP) TO THE M-5 SIGNAL HEAD.
14. INSTALL TYPE VIII CABINET. THIS IS COMMONLY REFERRED TO AS AN "R" CABINET. THE CABINET SHALL CONFORM TO THE UNIFORM STANDARD DRAWINGS SPECIFICATIONS AND SPECIAL PROVISIONS, CLARK COUNTY AREA, NEVADA. INSTALL CABINET NEAR THE R.O.W. LINE OR AS SHOWN ON THE DRAWINGS.
15. THE CONTRACTOR SHALL SUPPLY A 2070N CONTROLLER TO THE CITY OF LAS VEGAS TRAFFIC SIGNAL REPAIR SHOP, FOURTEEN DAYS PRIOR TO SIGNAL TURN-ON, FOR TESTING PURPOSES. THE CONTRACTOR SHALL DELIVER THE CONTROLLER TO, AND PICKUP THE CONTROLLER AT 2800 E. CHARLESTON BOULEVARD. CONTRACTOR SHALL NOTIFY THE TRAFFIC SIGNAL REPAIR SHOP (229-6075) SEVEN DAYS PRIOR TO PICK UP. ALL 2070N CONTROLLERS MUST BE COMPATIBLE WITH AND FUNCTION PROPERLY WITH OS9 1996 OPERATION SYSTEM; THE LATEST REVISION OF THE "NEXT PHASE INTERSECTION MANAGEMENT SOFTWARE" (GARDNER TRANSPORTATION SYSTEM) AND THE ICONS (GARDNER TRANSPORTATION SYSTEM) GENERAL SOFTWARE.
16. CONTRACTOR SHALL POTHOLE SIGNAL POLE LOCATIONS PRIOR TO ORDERING OF POLES.
17. ALL MAST ARMS TO BE HOT-DIP GALVANIZED BY THE MANUFACTURER THE MAST ARM IS TO BE FABRICATED WITH END TENON ONLY. THE END TENON SHALL BE FACTORY INSTALLED AND THE REMAINING TETONS SHALL BE FABRICATED IN THE FIELD AT THE LOCATION SHOWN ON THE PLANS OR AS DIRECTED BY THE TRAFFIC ENGINEER AND/OR HIS AUTHORIZED REPRESENTATIVE. FOR TENON FABRICATION DETAILS SEE CLARK COUNTY AREA U.S.D. NO. 404.406 SHEET 2. ALL WELDING SHALL CONFORM TO AWS D 2.0, "SPECIFICATION FOR WELDED HIGHWAYS AND RAILWAY BRIDGES," AND TO ANY ADDITIONAL REQUIREMENTS OF SECTION 623 T.02.09 OF THE SPECIFICATIONS. ALL EXPOSED WELDS, SHALL BE PAINTED AS PROVIDED FOR REPAIRING DAMAGED GALVANIZED SURFACES.
18. ALL VEHICLE AND PEDESTRIAN SIGNAL INDICATIONS SHALL HAVE LIGHT EMMITING DIODE (LED) TYPE INDICATIONS, IN CONFORMANCE TO CITY OF LAS VEGAS SPECIAL PROVISIONS TO SECTION 623 OF THE CCA USS.
19. ALL VEHICLE DETECTION WILL BE BY VIDEO IMAGE DETECTION. EITHER ITERIS VANTAGE PLUS OR AUTO SCOPE 2004 VIDEO DETECTION SYSTEM MUST BE INSTALLED. EACH VIDEO CAMERA WILL HAVE POWER (3/16 COND. PVC JACKETED) AND 8281 COAXIAL CABLE DIRECTLY FROM THE CABINET. CAMERAS WILL BE MOUNTED PER THE MANUFACTURER'S RECOMMENDATIONS AND PER CLV TRAFFIC ENGINEER APPROVAL. "BNC" CONNECTORS ARE THE ONLY ACCEPTABLE TERMINATION OF CABLES.
20. IF THE IMPROVEMENTS NECESSITATE THE OBLITERATION, TEMPORARY CONSTRUCTION, TEMPORARY REMOVAL, OR RELOCATION OF ANY EXISTING TRAFFIC PAVEMENT MARKING, SUCH PAVEMENT MARKING SHALL BE RESTORED OR REPLACED AT THE CONTRACTORS EXPENSE TO THE SATISFACTION OF THE CITY.
21. INTERCONNECT CABLE SHALL BE 25 PAIR OF #22 AWG SHIELD SPECIFICATION REA PE 39.
22. THE CONTRACTOR SHALL INSTALL CROSSWALKS, STOP BARS AND SIGNS AS IDENTIFIED ON THE PLANS.

REGIONAL TRANSPORTATION COMMITTEE CITIZENS AREA TRANSIT ACCESS NOTES

1. UNLESS OTHERWISE SPECIFIED IN THE SPECIAL PROVISIONS, NO PUBLIC BUS OR TRANSIT STOP SHALL BE TEMPORARILY CLOSED WITHOUT THE WRITTEN CONSENT OF THE REGIONAL TRANSPORTATION COMMISSION (RTC) DIRECTOR OR HIS DESIGNEE. THE RTC SHALL BE NOTIFIED AT LEAST TEN (10) WORKING DAYS PRIOR TO THE PROPOSED TEMPORARY CLOSURE OF ANY BUS OR TRANSIT STOP, INCLUDING THOSE LISTED IN THE SPECIAL PROVISIONS.
2. NO BUS STOPS AT TRANSFER POINTS SHALL BE CLOSED DURING CONSTRUCTION. BUS STOPS AT TRANSFER POINTS CAN, HOWEVER, BE TEMPORARILY RELOCATED WITH THE APPROVAL OF THE RTC DIRECTOR OR HIS DESIGNEE.
3. IF BUS OR TRANSIT STOP IS TEMPORARILY RELOCATED, THE EXISTING BUS OR TRANSIT STOP SIGN PANELS SHALL BE RELOCATED TO TEMPORARY BUS OR TRANSIT STOPS AND SHALL REMAIN UNTIL TEMPORARY STOP IS REMOVED. TEMPORARY RELOCATION OF SIGN PANELS SHALL CONFORM TO SUBSECTION 627.03.05, "RELOCATION."
4. THE CONTRACTOR SHALL MAINTAIN ACCESS WHICH IS IN CONFORMANCE TO THE REQUIREMENTS OF THE AMERICANS WITH DISABILITIES ACT TO AND FROM BUS OR TRANSIT STOPS WHICH REMAIN OPEN AT ALL TIMES DURING CONSTRUCTION.

CITY OF LAS VEGAS TRAFFIC NOTES

1. ALL CONSTRUCTION SIGNING, BARRICADING, AND TRAFFIC DELINEATION SHALL CONFORM TO THE "MANUAL ON UNIFORM TRAFFIC CONTROL DEVICES", LATEST EDITION.
2. THE STREET SIGN CONTRACTOR SHALL OBTAIN STREET NAMES AND BLOCK NUMBERING FROM THE PLANNING DEPARTMENT PRIOR TO CONSTRUCTION.
3. BEFORE ANY WORK IS STARTED IN THE RIGHT-OF-WAY, THE CONTRACTOR SHALL INSTALL ALL ADVANCE WARNING SIGNS FOR THE CONSTRUCTION ZONE. THE CONTRACTOR SHALL INSTALL TEMPORARY STOP SIGNS AT ALL NEW STREET ENCROACHMENTS INTO EXISTING CITY STREETS WHERE WARRANTED IMMEDIATELY AFTER FIRST GRADING WORK IS ACCOMPLISHED, AND SHALL MAINTAIN SAID SIGNS UNTIL PERMANENT SIGNS ARE INSTALLED.
4. WHEN A DESIGNATED "SAFE ROUTE TO SCHOOL" IS ENCROACHED UPON BY A CONSTRUCTION WORK ZONE AND PUBLIC WORKS STAFF IDENTIFIES A NEED FOR STUDENTS TO BE ASSISTED IN THE SAFE CROSSING THROUGH THAT WORK ZONE, THE CONTRACTOR SHALL BE REQUIRED TO PROVIDE A QUALIFIED "CROSSING GUARD". THE GUARD SHALL BE PRESENT FOR THE FULL DURATION OF TIME THAT CHILDREN ARE LIKELY TO BE PRESENT.
5. IF THE IMPROVEMENTS NECESSITATE THE OBLITERATION, TEMPORARY OBSTRUCTION, TEMPORARY REMOVAL OR RELOCATION OF ANY EXISTING TRAFFIC PAVEMENT MARKING, SUCH PAVEMENT MARKING SHALL BE RESTORED OR REPLACED WITH LIKE MATERIALS TO THE SATISFACTION OF THE CITY TRAFFIC ENGINEER.
6. THE CONTRACTOR SHALL BE RESPONSIBLE FOR PROVIDING AND INSTALLING ALL PERMANENT SIGNS SHOWN ON THE PLANS. STREET NAME SIGNS SHALL CONFORM IN THEIR ENTIRETY TO CURRENT CITY STANDARDS. ALL OTHER SIGNS SHALL BE STANDARD SIZE UNLESS OTHERWISE SPECIFIED ON THE PLANS. ALL SIGN POSTS SHALL BE INSTALLED IN ACCORDANCE WITH THE CURRENT CITY STANDARDS.
7. WHEN A PROPOSED STREET LIGHT STANDARD IS LOCATED WITHIN FIVE (5') FEET OF ANY PROPOSED SIGN SHOWN ON THE PLANS TO BE MOUNTED ON A SIGNPOST, THE SIGN SHALL BE MOUNTED ON THE STREET LIGHT STANDARD AND THE SIGNPOST SHALL BE ELIMINATED.
8. ALL PERMANENT TRAFFIC CONTROL DEVICES CALLED FOR HEREON SHALL BE IN PLACE AND IN FINAL POSITION PRIOR TO ALLOWING ANY PUBLIC TRAFFIC ONTO THE PORTIONS OF THE ROAD(S) BEING IMPROVED HERE UNDER, REGARDLESS OF THE STATUS OF COMPLETION OF PAVING OR OTHER OFF-SITE IMPROVEMENTS CALLED FOR BY THESE PLANS.
9. STREET SIGNS AND STOPS SIGNS SHALL BE INSTALLED PER CITY STANDARD SPECIFICATIONS FOR PLACEMENT OF STREET NAME SIGNS.
10. THE CONTRACTOR SHALL PROVIDE ALL NECESSARY TRAFFIC CONTROL DEVICES AND FLAGGERS TO INSURE THE SAFETY OF THE PUBLIC IN OR AROUND THE WORK AREA. THE CONTRACTOR SHALL HAVE A CERTIFIED ATSSA TRAFFIC CONTROL TECHNICIAN OR IMSA WORK ZONE SAFETY SPECIALIST SET UP, MAINTAIN AND/OR REMOVE ALL TRAFFIC CONTROL DEVICES IN THE CITY OF LAS VEGAS RIGHT OF WAY.
11. WORK IN PUBLIC STREETS, ONCE BEGUN, SHALL BE EXPEDITED TO COMPLETION SO AS TO PROVIDE MINIMUM INCONVENIENCE TO ADJACENT PROPERTY OWNERS AND TO THE TRAVELING PUBLIC.
12. THE CONTRACTOR SHALL BE RESPONSIBLE FOR NOTIFYING CITIZENS AREA TRANSIT (C.A.T.) IF THE CONSTRUCTION INTERRUPTS OR RELOCATES A BUS STOP OR HAS AN ADVERSE EFFECT ON BUS SERVICE ON THAT STREET TO ARRANGE FOR TEMPORARY RELOCATION OF STOP.
13. GUARDS SHALL BE OBTAINED BY CONTACTING THE METROPOLITAN POLICE DEPARTMENT SPECIAL EVENTS UNIT (PHONE # 229-3442) WHO WILL PROVIDE OFFICERS PROPERLY TRAINED IN TRAFFIC CONTROL. FEES FOR THE USE OF THESE OFFICERS SHALL BE SET BY METRO AND WILL BE PAID BY THE CONTRACTOR. THE CONTRACTOR IS RESPONSIBLE FOR ALL ARRANGEMENTS WITH METRO.
14. ANY WORK WITHIN 300' OF A SIGNALIZED INTERSECTION WILL BE NIGHT WORK, UNLESS DIRECTED BY THE CITY OF LAS VEGAS TRAFFIC ENGINEER.
15. CONTRACTOR SHALL CONTACT THE TRAFFIC ENGINEERING DIVISION (TRANSPORTATION SECTION) THROUGH THE PROJECT'S OFFSITE INSPECTOR PRIOR TO INITIATING PAVING TO RECEIVE DIRECTION FOR ANY PERMANENT OR TEMPORARY MODIFICATIONS TO THE APPROVED DRAWINGS REGARDING FINAL PAVEMENT TRANSITIONS, MARKINGS AND SIGNING THAT ARE REQUIRED TO MATCH ADJACENT ROADWAY SEGMENTS. THE CONTRACTOR SHALL PROVIDE A DRAWING FOR APPROVAL BY THE TRAFFIC ENGINEERING DIVISION DEPICTING ANY ADJUSTMENTS TO THE FINAL PAVEMENT MARKINGS AND SIGNAGE, WHICH MAY INCLUDE OMITTING, ADDING OR MODIFYING PAVEMENT MARKINGS AND TRAFFIC CONTROL SIGNS SUCH THAT ADEQUATE TRANSITIONS AND LANE TERMINATIONS BETWEEN ADJACENT ROADWAY SEGMENTS ARE CONSTRUCTED.

CITY OF LAS VEGAS STREET LIGHT NOTES

1. ALL STREET LIGHTING INSTALLATIONS SHALL BE IN ACCORDANCE WITH THE STREET LIGHTING PLANS, THE "UNIFORM STANDARD SPECIFICATIONS FOR PUBLIC WORKS CONSTRUCTION OFF-SITE IMPROVEMENTS, CLARK COUNTY AREA, NEVADA," LATEST REVISION, AND THE "UNIFORM STANDARD DRAWINGS FOR PUBLIC WORKS CONSTRUCTION OFF-SITE IMPROVEMENTS, CLARK COUNTY AREA, NEVADA," LATEST REVISION, AND ANY ADOPTED SPECIAL AREA STANDARDS.
2. NO DEVIATION OF STREET LIGHT, PULL BOX, CONDUITS (ETC.) LOCATIONS SHALL BE PERMITTED WITHOUT WRITTEN APPROVAL OF TRAFFIC ENGINEERING AND THE CITY ENGINEER.
3. ALL EXISTING STREET LIGHTING SHALL REMAIN OPERATIONAL DURING CONSTRUCTION.
4. ALL STREET LIGHTING CONDUITS STUB SHALL HAVE AT LEAST ONE GREEN #8 THW WIRE INSTALLED, AS TRACER WIRE. WHEN "EMPTY" CONDUIT IS COMPLETELY INSTALLED FROM PB TO PB, IT SHALL HAVE MINIMUM OF 2 #4 AND 1 #8 THW WIRE WITH THE ENDS TAPED OR "SAFE OFF" PRIOR TO FINAL INSPECTION.
5. ANY STRUCTURE SUCH AS BLOCK WALLS, CHAIN LINK FENCES, RETAINING WALLS, ETC., SHALL LEAVE A MINIMUM CLEARANCE IN ACCORDANCE WITH THE USD NO. 320A.
6. AS-BUILT DRAWINGS SHALL BE SUPPLIED TO THE CITY OF LAS VEGAS TRAFFIC ENGINEERING DEPARTMENT (TEFO) PRIOR TO ANY PRE-FINAL INSPECTION. THE AS-BUILT DRAWING NEEDS TO BE STAMPED AS-BUILT AND SIGNED BY THE PREPARER.
7. SERVICE POINT SHALL BE COORDINATED WITH NEVADA POWER COMPANY, AND WHEREVER POSSIBLE, BE LOCATED NEAR THE CENTER OF THE CIRCUIT. SERVICE POINTS SHALL BE SHOWN ON THE PLANS.
8. IT SHALL BE ASSUMED THAT IN THE ABSENCE OF AN EXISTING, WORKABLE CIRCUIT TO ATTACH TO, ALL INSTALLATIONS SHALL REQUIRE A NEW SERVICE FOR OPERATION OF THE CIRCUIT.
9. WHEREVER THERE IS AN OVERHEAD UTILITY THAT MAY CONFLICT WITH THE INSTALLATION OF STREET LIGHTING CIRCUITS AND/OR POLES, THESE CONFLICTS MUST BE RESOLVED BETWEEN THE DEVELOPER AND THE UTILITIES INVOLVED BEFORE STREET LIGHT BASES ARE INSTALLED AT NO EXPENSE TO THE CITY OF LAS VEGAS.
10. THE CONTRACTOR SHALL FURNISH COMPLETE SERVICE TO TRANSFORMERS AND CONTROL SYSTEMS IF REQUIRED ON PLANS.
11. THE DEVELOPER/OWNER WILL BE REQUIRED TO SUPPLY POWER TO ALL NEW PUBLIC STREET LIGHTS INSTALLED UNDER THIS DEISGN PRIOR TO BOND RELEASE OR PROJECT COMPLETION. THE DEVELOPER/OWNER WILL BE RESPONSIBLE FOR ALL ITEMS ASSOCIATED WITH THE INSTALLATION, CONSTRUCTION, ENERGIZING, MAINTENANCE AND OPERATIONAL COST OF SAID STREET LIGHTS PRIOR TO PROJECT COMPLETION. REFER TO THE PLAN FOR ANY NEW SERVICE REQUIREMENTS. THE TRANSFER OF OWNERSHIP FROM DEVELOPER/OWNER TO THE CITY OF LAS VEGAS FOR ALL NEW PUBLIC STREET LIGHT/S AND/OR SERVICE/S INSTALLED UNDER THIS PLAN DESIGN WILL BE IN CONJUNCTION WITH THIS PROJECT COMPLETION. COORDINATE ALL MAINTENANCE AND OPERATIONAL TRANSFER WITH THE CITY OF LAS VEGAS TRAFFIC ENGINEERING DEPARTMENT (TEFO) AT (702) 229-6331.

CLV DWG # ____________

LAS VEGAS VALLEY WATER DISTRICT

VERIFY SCALE
1/2 0 1/2 1
BAR REPRESENTS ONE AND ONE-HALF INCHES ON ORIGINAL

XXXXXXXXXXXXXXXXXXXXXXXXXXXXXX
XXXXXXXXXXXXXXXXXXXXXXXXXXXXXX

SCALE
HORIZ. SCALE 1"= XX'
VERT. SCALE 1"= X'

DRAWN BY: XXXXXXXXXXXXXXXXX XX/XX/XX
CHECKED BY: XXXXXXXXXXXXXXXXX XX/XX/XX
RECOMMENDED BY:
LVVWD SENIOR CIVIL ENGINEER DATE
ACCEPTED BY:
DESIGN MANAGER DATE

REVISIONS:

CONTRACT NUMBER
CXXXX
DRAWING NUMBER G4
SHEET XX OF XX

– A –

A/C	AIR CONDITIONING
AB	ANCHOR BOLT
ABAN	ABANDON
ABC	AGGREGATE BASE COURSE
ABS	ABSOLUTE
ABUT	ABUTMENT
ABV	ABOVE
AC	ASPHALTIC CONCRETE
ACKV	AUTOMATIC CHECK VALVE
ACP	ASBESTOS CEMENT PIPE
ACS	ACCESS
ADA	AMERICAN DISABILITY ACT
AD	AREA DRAIN
ADDL	ADDITIONAL
ADDM	ADDENDUM
ADJ	ADJUSTABLE
AGGR	AGGREGATE
AHD	AHEAD
AL	ALUMINUM
ALT	ALTERNATE
AMS	ANGLE METER STOP
AMT	AMOUNT
&	AND
ANSI	AMERICAN NATIONAL STANDARDS INSTITUTE
ANT	ANTENNA
AP	ACCESS PANEL
APN	ASSESSOR PARCEL NUMBER
APPROX	APPROXIMATE
APPVD	APPROVED
ASPH	ASPHALT
ASSN	ASSOCIATION
ASSY	ASSEMBLY
ASTM	AMERICAN SOCIETY OF TESTING MATERIALS
AUX	AUXILIARY
AV	AIR VENT/AIR VALVE
AVAR	AIR VACUUM AIR RELEASE VALVE
AVE	AVENUE
AWG	AMERICAN WIRE GAUGE
AWWA	AMERICAN WATER WORKS ASSOCIATION

– B –

B/H	BUMPED HEAD
B&S	BELL & SPIGOT
BAL	BALANCE
BC	BOLT CIRCLE/BACK OF CURB
BCV	BUTTERFLY CHECK VALVE
BE	BELL END
BETW	BETWEEN
BFP	BACKFLOW PREVENTER
BFV	BUTTERFLY VALVE
BK	BOOK/BACK
BL-FLG	BLIND FLANGE
BLDG	BUILDING
BLK	BLOCK
BLM	BUREAU OF LAND MANAGEMENT
BLVD	BOULEVARD
BM	BENCHMARK
BO	BLOW OFF ASSEMBLY
BOC	BACK OF CURB
BOT	BOTTOM
BOW	BACK OF WALK
BPV	BACK PRESSURE VALVE
BRG	BEARING
BS	BACK SIGHT
BUR	BURIED
BV	BALL VALVE
BW	BOTH WAYS/BACK OF SIDEWALK

– C –

C/C	CENTER TO CENTER
C	CONDUIT
C&G	CURB & GUTTER
CAL	CALIBRATE
CAP	CAPACITY
CAV	COMBINATION AIR VALVE
CB	CATCH BASIN
CCO	CLARK COUNTY
CEM	CEMENT
CI	CAST IRON
CIP	CAST IRON PIPE/CAST IN PLACE
CIR	CIRCLE
CIRCUM	CIRCUMFERENCE
CJP	COMPLETE JOINT PENETRATION
CL OR ℄	CENTERLINE
CL2	CHLORINE
CLG	CEILING
CLO	CLEANOUT
CLP	CLAMP
CLR	CLEAR
CLSM	CONTROLLED LOW STRENGTH MATERIAL
CLV	CITY OF LAS VEGAS
CM	CENTIMETER
CMP	CORRUGATED METAL PIPE
CMU	CONCRETE MASONRY UNIT
CNLV	CITY OF NORTH LAS VEGAS
CO	COUNTY/COMPANY/CONTRACT
COH	CITY OF HENDERSON
COL	COLUMN
COMB	COMBINATION
COMM	COMMUNICATION
COMPL	COMPLETE

– C – (CONT.)

CON	CONCENTRIC
CONC	CONCRETE
CONN	CONNECTION
CONST	CONSTRUCTION
CONT	CONTINUE OR CONTINUOUS
CONTR	CONTRACTOR
COORD	COORDINATE
COR	CORNER
CORP STOP	CORPORATION STOP
COV PL	COVER PLATE
CPLG	COUPLING
CPVC	CHLORINATED POLYVINYL CHLORIDE PIPE
CT	COURT
CTR	CENTER
CTV	CABLE TELEVISION
CU	CUBIC/COPPER
CUST	CUSTOMER
CV	CONTROL VALVE
CW	CLOCKWISE
CY	CUBIC YARD
CYL	CYLINDER

– D –

D OR Δ	DELTA ANGLE
D/W	DRIVEWAY
DEC	DECIMETER
DEMO	DEMOLITION
DEPT	DEPARTMENT
DET	DETAIL
DEV	DEVELOPMENT
DI	DROP INLET OR DUCTILE IRON
DIA OR Ø	DIAMETER
DIAG	DIAGONAL
DIM	DIMENSION
DIP	DUCTILE IRON PIPE
DIR	DIRECTION
DISCH	DISCHARGE
DIST	DISTANCE
DISTR	DISTRIBUTION
DIV	DIVISION
DL	DEAD LOAD
DMH	DROP MANHOLE
DN	DOWN
DR	DRIVE
DRW	DRY WELL
DUPL	DUPLICATE
DWG	DRAWING

– E –

E	EAST OR EDGE
EA	EACH
EC	EPOXY COATED/END OF CURB
ECC	ECCENTRIC
EF	EACH FACE
EL	EPOXY LINED
ELEC	ELECTRICAL
ELEV	ELEVATION
ELL	ELBOW
ENG	ENGINE/ENGINEERING
ENGR	ENGINEER
EOP	EDGE OF PAVEMENT
EOS	EDGE OF SHOULDER
EQ	EQUAL OR EQUATION
EQ SP	EQUALLY SPACED
EQUIP	EQUIPMENT
EQUIV	EQUIVALENT
ESMT	EASEMENT
EST	ESTIMATE
ETC	ETCETERA
EW	EACH WAY
EXC	EXCAVATE
EXIST	EXISTING
EXP JT	EXPANSION JOINT
EXT	EXTENSION

– F –

F/F	FACE TO FACE
FABR	FABRICATION/FABRICATED
FC	FACE OF CURB
FD	FLOOR DRAIN
FDN	FOUNDATION
FEXT	FIRE EXTINGUISHER
FF	FINISHED FLOOR
FG	FINISHED GRADE
FH	FIRE HYDRANT
FIG	FIGURE
FL OR ℄	FLOW LINE
FLG	FLANGE
FLR	FLOOR
FMCT	FLOW METER COMPOUND TORRENT
FMH	FLEXIBLE METAL HOSE
FN	FENCE
FND	FOUND
FO	FIBER OPTIC
FOC	FACE OF CURB
FOW	FACE OF WALL
FPC	FLEXIBLE PIPE COUPLING
FPM	FEET PER MINUTE

– F – (CONT.)

FPS	FEET PER SECOND
FPT	FEMALE PIPE THREAD
FREQ	FREQUENCY
FRP	FIRE RETARDANT POLYESTER RESIN/ FIBERGLASS REINFORCED POLYMER
FSTNR	FASTENER
FT	FOOT OR FEET
FTG	FOOTING
FUT	FUTURE

– G –

G/B	GRADE BREAK
G	GAS
GA	GAGE
GAL(S)	GALLON(S)
GALV	GALVANIZED
GENL	GENERAL
GIS	GEOGRAPHIC INFORMATION SYSTEM
GND	GROUND
GPD	GALLONS PER DAY
GPH	GALLONS PER HOUR
GPM	GALLONS PER MINUTE
GRD	GRADE
GRT	GRATE
GV	GATE VALVE

– H –

H	HOUSE
H&V	HEATING & VENTILATION
HARN	HIGH ACCURACY FREQUENCY NETWORK
HB	HOSE BIBB
HD	HEAD
HDR	HEADER
HEX	HEXAGONAL
HMWPE	HIGH MOLECULAR WEIGHT POLYETHYLENE
HORIZ	HORIZONTAL
HP	HORSEPOWER
HPI	HORIZONTAL POINT OF INTERSECTION
HPG	HIGH PRESSURE GAS
HR	HOUR
HT	HEIGHT
HV	HOSE VALVE
HWY	HIGHWAY

– I –

ID	INSIDE DIAMETER
IN	INCH
INST	INSTALL
INSTR	INSTRUMENT
INSUL	INSULATION
INT	INTERIOR
INV	INVERT
IPS	IRON PIPE SIZE
IRR	IRRIGATION

– J –

JT	JOINT

– K –

kg	KILOGRAM
km	KILOMETER

– L –

LAD	LADDER
LB OR #	POUND
LDR	LEADER
LEN OR L	LENGTH OF CURVATURE
LF	LINEAR FOOT
LG	LONG
LN	LANE
LT	LEFT/LIGHT
LVVWD	LAS VEGAS VALLEY WATER DISTRICT
LWR	LOWER

– M –

M	METER
MATL	MATERIAL
MAX	MAXIMUM
MC	MORTAR COATED
MEAS	MEASUREMENT
MECH	MECHANICAL
MFR	MANUFACTURER
MG	MILLION GALLONS
MGD	MILLION GALLONS PER DAY
MH	MANHOLE
MIN	MINIMUM
MISC	MISCELLANEOUS
MJ	MECHANICAL JOINT
MKR	MARKER
ML	MORTAR LINED

– M – (CONT.)

MLC	MORTAR LINED & COATED
MON	MONUMENT
MOV	MOTOR OPERATED VALVE
MPT	MALE PIPE THREAD
MSD	MAIN SERVICE DISTRIBUTION
MSDS	MATERIAL SAFETY DATA SHEET
MTD	MOUNTED

– N –

N	NORTH
N/A	NOT APPLICABLE
NaOCL	SODIUM HYPOCHLORITE
NAVD	NORTH AMERICAN VERTICAL DATUM
NAP	NOT-A-PART
NBS	NATIONAL BUREAU OF STANDARDS
NC	NATIONAL COARSE
NCS	NEVADA COORDINATE SYSTEM
NDOT	NEVADA DEPARTMENT OF TRANSPORTATION
NE	NORTHEAST
NF	NORTH FACE
NFPA	NATIONAL FIRE PROTECTION ASSOCIATION
NG	NATURAL GROUND
NIC	NOT IN CONTRACT
NIP	NOT IN PROJECT
NO. #	NUMBER
NOM	NOMINAL
NOSHA	NEVADA OCCUPATIONAL SAFETY AND HEALTH ADMINISTRATION
NPC	NEVADA POWER COMPANY
NPS	NOMINAL PIPE SIZE
NPT	NATIONAL TAPER PIPE THREAD
NRS	NEVADA REVISED STATUTES/ NON-RISING STEM
NTS	NOT TO SCALE
NW	NORTHWEST

– O –

O/O	OUT TO OUT
OC	ON CENTER
OD	OUTSIDE DIAMETER
OF	OUTSIDE FACE
OFC	OFFICE
OH	OVER HEAD
OHP	OVER HEAD POWER
OHTEL	OVER HEAD TELEPHONE
OPER	OPERATOR
OPNG	OPENING
OPP	OPPOSITE
ORF	ORIFICE
ORIG	ORIGINAL
OS&Y	OUTSIDE SCREW & YOKE
OSHA	OCCUPATIONAL SAFETY AND HEALTH ADMINISTRATION
OVFL	OVERFLOW
oz	OUNCE

– P –

P	POLE/PRESSURE/PIPE/POWER
P/L / ⅊	PROPERTY LINE
PAT	PATENT
PAVMT	PAVEMENT
PB	PULL BOX
PC	PRESSURE CLASS
PCCP	PRESTRESSED CONCRETE CYLINDER PIPE
PDL	PUMP DISCHARGE LINE
PE	PLAIN END/POLYETHYLENE PIPE
PED	PEDESTAL
PERM	PERMANENT
PERP	PERPENDICULAR
PG	PRESSURE GAGE
PH	PHASE
PI	POINT OF INTERSECTION
PHYD	POST HYDRANT
PKG	PACKAGE
PKWY	PARKWAY
PL	PLACE/PLATE/PARCEL LINE
PLS	PROFESSIONAL LAND SURVEYOR
PLT	PLATE (DRAWING)
PO	PUSH-ON
POLY	POLYETHYLENE
PP	POWER POLE
PPM	PARTS PER MILLION
PR	PAIR
P/R	PATENT RESERVATION
PRC	PRECAST REINFORCED CONCRETE
PRELIM	PRELIMINARY
PRIM	PRIMARY
PROP	PROPOSED
PRV	PRESSURE REGULATING VALVE
PS	PRESSURE SWITCH/PUMP STATION
PSF	POUNDS PER SQUARE FOOT
PSI	POUNDS PER SQUARE INCH
PT	POINT/POINT OF TANGENCY
PV	PLUG VALVE
PVC	POLYVINYL CHLORIDE PIPE

– Q –

QCV	QUICK COUPLER VALVE
QDC	QUICK DISCONNECT COUPLING

– O – (CONT.)

QS	QUAD SHEET
QTR	QUARTER
QTY	QUANTITY

– R –

R	RADIUS
(R)	RADIAL
R/W	RIGHT-OF-WAY
RCB	REINFORCED CONCRETE BOX
RCP	REINFORCED CONCRETE PIPE
RD	ROAD
REC	RECESSED
RECT	RECTANGULAR
RED	REDUCER
REF	REFERENCE (DIMENSION)
REG	REGULATING (REGULATOR)
REINF	REINFORCED (REBAR)
REQD	REQUIRED
RES	RESIDENTIAL OR RESERVOIR
RET	RETURN
REV	REVISION OR REVERSE
RF	RAISED FACE
RM	ROOM
RME	RESIDENTIAL MAIN EXTENSION
RPM	REVOLUTIONS PER MINUTE
RPS	REVOLUTIONS PER SECOND
RPPA	REDUCED PRESSURE PRINCIPLE ASSEMBLY
RR	RAILROAD
RSGV	RESILIENT SEATED GATE VALVE
RT	RIGHT/RING TITE
RV	RELIEF VALVE

– S –

S	SOUTH/SLOPE
SA	SAMPLE LINE
S/C	SAW CUT
SCCP	STEEL CYLINDER CONCRETE PIPE
SCH	SCHEDULE
SD	STORM DRAIN
SDWK	SIDEWALK
SE	SOUTHEAST
SEC	SECTION/SECOND(ARY)
SEG	SEGMENT
SHLDR	SHOULDER
SHT	SHEET
SID	SPECIAL IMPROVEMENT DISTRICT
SIG	SIGNAL
SIM	SIMILAR
SL	SLOPE
SLV	SLEEVE
SNWA	SOUTHERN NEVADA WATER AUTHORITY
SNWS	SOUTHERN NEVADA WATER SYSTEM
SO	STUBOUT
SPC	STATE PLANE COORDINATES
SPEC(S)	SPECIFICATION(S)
SQ	SQUARE
SQ FT	SQUARE FOOT (FEET)
SQ YD	SQUARE YARD
SR	SAMPLE RETURN
SRM	SINGLE RESIDENTIAL MAIN
SS	SANITARY SEWER
ST	STREET
STA	STATION
STD	STANDARD
STIR	STIRRUP
STL	STEEL
STLT	STREET LIGHT
SSTL	STAINLESS STEEL
SUPPL	SUPPLEMENT
SUR	SURVEY
SV	SOLENOID VALVE
SW	SIDEWALK OR SOUTHWEST
SY	SQUARE YARD
SYM	SYMBOL
SYMM	SYMMETRICAL
SYS	SYSTEM

– T –

t	THICKNESS OF WELD
T	TELEPHONE/TANGENT
T&B	TOP & BOTTOM
T&G	TONGUE AND GROOVE
TAN	TANGENT
TBE	THREAD BOTH ENDS
TBM	TEMPORARY BENCH MARK
TC	TOP OF CURB
TD	TRENCH DRAIN
TDH	TOTAL DYNAMIC HEAD
TEMP	TEMPORARY
THK	THICK(NESS)
THR BLK	THRUST BLOCK
THRD	THREADED
TK	TANK
TMH	TOP OF MANHOLE
TOE	THREAD ONE END
TOF	TOP OF FOOTING
TOG	TOGETHER
TOGR	TOP OF GRATE
TOP	TOP OF PIPE

– T – (CONT.)

TOR	TOP OF RIM
TOS	TOP OF SLAB
TOSTL	TOP OF STEEL
TOSW	TOP OF SIDEWALK
TOT	TOTAL
TOW	TOP OF WALL
TP	TELEPHONE POLE/TOP OF PIPE
TR	TRAIL OR TRACK/TOP OF RIM
TRANS	TRANSITION/TRANSMISSION
(TYP)	TYPICAL

– U –

UDS	UNIFORM DESIGN AND CONSTRUCTION STANDARDS FOR WATER DISTRIBUTION SYSTEMS, CLARK COUNTY, NV
UE	UNDERGROUND ELECTRIC
UFC	UNIFORM FIRE CODE
UG	UNDERGROUND
UGC	UNDERGROUND CONDUIT
UGP	UNDERGROUND POWER
UGT	UNDERGROUND TELEPHONE
UL	UNDERWRITERS LABORATORIES
UNC	AMERICAN STANDARD UNIFIED COARSE THREAD
UNF	AMERICAN STANDARD UNIFIED FINE THREAD
UNIV	UNIVERSAL
UNO	UNLESS NOTED OTHERWISE
UPC	UNIFORM PLUMBING CODE
UPRR	UNION PACIFIC RAILROAD
USGS	UNITED STATES GEODETIC SURVEY
UTIL	UTILITIES

– V –

V	VOLT OR VALVE
VAC	VACUUM
VAR	VARIES
VB	VALVE BOX
VCP	VITRIFIED CLAY PIPE
VEL	VELOCITY
VENT	VENTILATOR
VERT	VERTICAL
VFD	VARIABLE FREQUENCY DRIVE
VG	VALLEY GUTTER
VHF	VERY HIGH FREQUENCY
VIB	VIBRATION
VIN	VINYL
VISC	VISCOSITY
VOL	VOLUME
VPI	VERTICAL POINT OF INTE..SECTION
VS	VALVE SHEET
VT	VENT

– W –

W/	WITH
W	WEST/WATER
W/O	WITHOUT
WD	WIDTH
WDN	WASTE DRAIN
WF	WIDE FLANGE
WH	WALL HYDRANT
WI	WROUGHT IRON
WL	WASTE LINE
WLD	WELDED
WM	WATER METER
WP	WORK POINT/WEATHER PROOF
WS	WATER SURFACE
WSP	WELDED STEEL PIPE
WSTP	WATER STOP
WT	WEIGHT
WTR	WATER
WV	WATER VALVE
WWF	WELDED WIRE FABRIC
WWM	WELDED WIRE MESH

– X –

XARM	CROSS ARM
XFMR	TRANSFORMER
XFR	TRANSFER
XSEC	CROSS SECTION

– Y –

YD	YARD
YH	YARD HYDRANT
YLD	YIELD

NOTE:
THIS IS A STANDARD ABBREVIATION SHEET. SOME ABBREVIATIONS MAY APPEAR ON THIS SHEET BUT NOT USED IN THE PLANS. ALL ABBREVIATIONS USED ON THE PLANS MUST APPEAR ON THIS SHEET.

LAS VEGAS VALLEY WATER DISTRICT

SPACE FOR CONSULTANT LOGO,
NAME AND ADDRESS

VERIFY SCALE
1/2 0 1/2 1
BAR REPRESENTS ONE AND ONE-HALF INCHES ON ORIGINAL

XXXXXXXXXXXXXXXXXXXXXXXXXXX
XXXXXXXXXXXXXXXXXXXXXXXXXXX

ABBREVIATION LIST

SCALE
HORZ. SCALE 1" = XX'
VERT. SCALE 1" = X'

DRAWN BY: XXXXXXXXXXXXXXXX XX/XX/XX
CHECKED BY: XXXXXXXXXXXXXXXX XX/XX/XX
RECOMMENDED BY: XXXXX X. XXXXXX DATE
ACCEPTED BY: SHAWN P. MOLLUS DATE

ENGINEER'S STAMP

REVISIONS:

CONTRACT NUMBER
CXXXX
DRAWING NUMBER G5
SHEET XX OF XX

ESTIMATED QUANTITIES

(FOR MAJOR ITEMS ONLY)

ITEM – DESCRIPTION	UNIT	QUANTITY

NOTE:
FOR COMPLETE DESCRIPTION, REFER TO THE BID SCHEDULE OF THE CONTRACT SPECIFICATIONS.

LAS VEGAS VALLEY WATER DISTRICT

SPACE FOR CONSULTANT LOGO,
NAME AND ADDRESS

VERIFY SCALE
1/2 0 1/2 1
BAR REPRESENTS ONE AND ONE-HALF INCHES ON ORIGINAL

XXXXXXXXXXXXXXXXXXXXXXXXXXXXXX
XXXXXXXXXXXXXXXXXXXXXXXXXXXXXX

ESTIMATED QUANTITIES

SCALE
HORIZ. SCALE 1"= XX'
VERT. SCALE 1"= X'

DRAWN BY: XXXXXXXXXXXXXXXX XX/XX/XX
CHECKED BY: XXXXXXXXXXXXXXXX XX/XX/XX
RECOMMENDED BY: XXXXX X. XXXXXX DATE
ACCEPTED BY: SHAWN P. MOLLUS DATE

ENGINEER'S STAMP

REVISIONS:

CONTRACT NUMBER
CXXXX
DRAWING NUMBER G6
SHEET XX OF XX

LAS VEGAS VALLEY WATER DISTRICT
DESIGN DETAIL STANDARDS

TABLE OF CONTENTS

DESCRIPTION	REV. DATE	DWG NO.
SURVEY		
Imbedded Record of Survey	08-23-01	SV01
Horizontal Control Plan	08-23-01	SV02
Right-of-Way Sheet	08-23-01	SV03

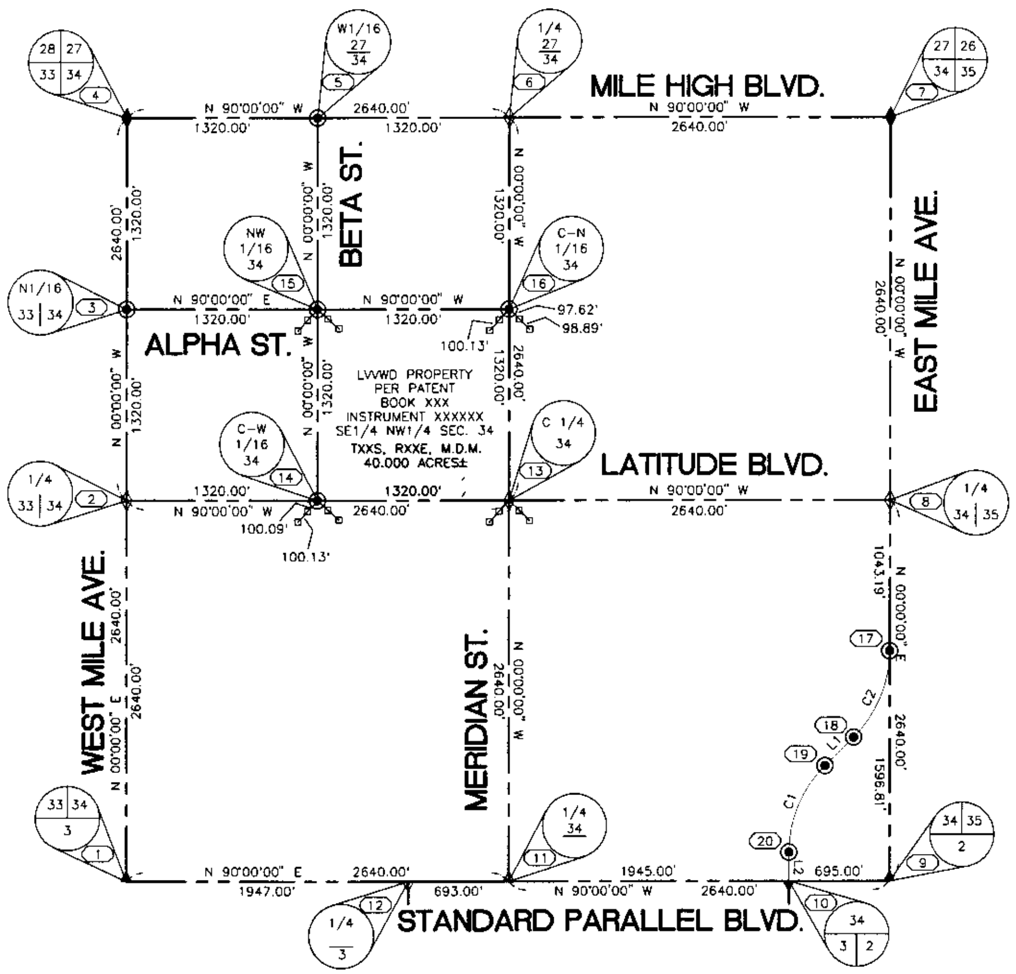

LEGEND

— — — —	CADASTRAL LINE
—·—·	CENTERLINE DEDICATED RIGHT-OF-WAY
— — —	TIE DISTANCE DIMENSION LINE
◆	SECTION CORNER, SEE PROVENANCE
◇	1/4 SECTION CORNER, SEE PROVENANCE
◉	FOUND OR SET, SEE PROVENANCE
⊡	SET P/K & TAG, PLS 9677 IN-LINE REFERENCES 100.00 FEET SPACING UNLESS STATED OTHERWISE
(999)	MONUMENT IDENTIFICATION NUMBER SEE "PROJECT CONTROL COORDINATE TABLE"

PROJECT BENCHMARK

DESCRIPTION: FOUND 1-1/2" X 2" ALUMINUM PLATE AND RIVET LOCATED IN TOP OF CURB AT THE NORTH RETURN, NORTHEAST QUADRANT OF THE INTERSECTION OF XXXXX ST. WITH XXXXX AVE. ELEVATION = XXX.XXX METERS (NAVD'88)
SOURCE: BENCHMARK STATION XC21 XXSWWX, "CLARK COUNTY VERTICAL CONTROL", SHT XX-XX, NE A, REV 1992

ON-SITE BENCHMARKS

IN ADDITION TO THE 3 DIMENSIONAL POSITIONS FOUND WITHIN THE "PROJECT CONTROL COORDINATE TABLE", THE FOLLOWING BENCHMARKS WERE SET FOR ON-SITE VERTICAL CONTROL:

"X" IN CONCRETE AT NE COR. ELECTRIC VAULT, 80' S OF AND 40' W OF NE COR. SE1/4 NW1/4 SECTION 34.
ELEVATION = 2501.35 (U.S. SURVEY FEET NAVD'88)

BASIS OF BEARINGS

THE SOUTH LINE OF THE SOUTHEAST QUARTER OF SECTION 34, TOWNSHIP XX SOUTH, RANGE XX EAST, MOUNT DIABLO MERIDIAN, AS SHOWN ON THE DEPENDENT RESURVEY OF SAID TOWNSHIP APPROVED BY THE BUREAU OF LAND MANAGEMENT, SEPTEMBER 1958, ON FILE AT THE BUREAU OF LAND MANAGEMENT DISTRICT OFFICE, LAS VEGAS, NEVADA.

REFERENCES

1. PARCEL MAPS: XXX-XXX; XXX-XXX; XXX-XXX; XXX-XXX; XXX-XXX
2. SURVEYS: XXX-XXX; XXX-XXX; XXX-XXX; XXX-XXX; XXX-XXX
3. PLATS: XXX-XXX; XXX-XXX; XXX-XXX; XXX-XXX; XXX-XXX
4. CORNER RECORDS: XXX-XXX; XXX-XXX; XXX-XXX; XXX-XXX
5. GOV'T. PLATS: DEP. RSRVY., USBLM SEPT. 1958, ORIG. SRVY. AUG. 1881.
6. UNRECORDED SURVEYS: J.M.SUTHER, CIVIL ENG., OCT. 1945
7. QUASI-MUNICIPAL RECORDS: LAS VEGAS LAND & WATER CO. JUL, 1948.
8. THE TITLE REPORT WAS FURNISHED BY XXXXXX TITLE OF NEVADA, SPECIFICALLY PREPARED BY, OR UNDER THE RESPONSIBLE CHARGE OF, XXXX XXXXXXXXXX, TITLE OFFICER. SAID REPORT AND COPIES OF ALL EXCEPTIONS TO THE PROPERTIE(S) WERE FURNISHED BY SAID OFFICER UNDER REPORT NO. XXXXXXXX, DTD. X/X/XX @ 7:30AM.
9. ADJUSTMENTS COMPUTATIONS, OR, P.R. WOLF, ET. AL., CHAPTER 17, ISBN 0-471-16833-5.

NOTES

1. THIS SURVEY WAS PERFORMED UTILIZING TRIMBLE STATIC AND FAST STATIC GPS SURVEING TECHNIQUES. THE PUBLISHED TECHNICAL ACCURACY SPECIFICATIONS USING THIS EQUIPMENT AND PROCESSING SOFTWARE ARE LISTED AS FOLLOWS:

   HORIZONTAL: ±[5MM + (1PPM X BASELINE)] (1 SIGMA)
   VERTICAL: ±[10MM + (1PPM X BASELINE)] (1 SIGMA)
   THE PRECEDING REQUIRES THE FOLLOWING MINIMUM FIELD CONDITIONS:
   P.D.O.P.<6, R.M.S.<50, SATELLITES>5, OBSTRUCTION MASK ANGLE<13°
   (TRIMBLE LIT. ID# TID10358 11/95, TRIMBLE NAVIGATION LTD.)

2. TRIMBLE SOFTWARE USED FOR THIS SURVEY INCLUDES:
   PROJECT MANAGEMENT: GPSURVEY VERSION 2.20
   LEAST SQUARES ADJUSTMENT: TRIMNET VERSION 2.20
   BASELINE PROCESSOR: WAVE VERSION 2.20

3. EQUIPMENT USED FOR THIS SURVEY INCLUDES:
   - 3 TRIMBLE 4000SSi RECEIVERS,
   - 2 L1/L2 COMPACT ANTENNAS WITH GROUND PLANE
   - SOKKIA TRIBRACHS (RECENTLY CALIBRATED)
   - SOKKIA WOODEN TRIPODS
   - 1 L1/L2 GEODETIC ANTENNA WITH PERMANENT GROUND PLANE

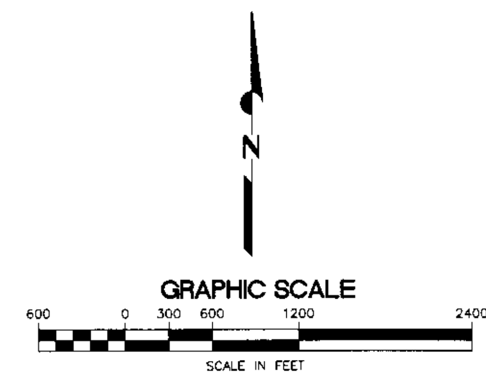

SURVEYOR'S CERTIFICATE

I, XXXXXXXX X. XXXXXXX, A PROFESSIONAL LAND SURVEYOR, REGISTERED IN THE STATE OF NEVADA, ACTING AS AGENT FOR XXXXXXXXXXXXX XXXXXXXXX, HEREBY CERTIFY THAT:

1. THIS PLAT REPRESENTS THE RESULTS OF A SURVEY CONDUCTED UNDER MY DIRECT SUPERVISION AT THE INSTANCE OF THE LAS VEGAS VALLEY WATER DISTRICT.

2. THE LANDS SURVEYED LIES WITHIN THE XX QUARTER OF SECTION XX, TOWNSHIP XX SOUTH, RANGE XX EAST, MOUNT DIABLO MERIDIAN, CLARK COUNTY, NEVADA, AND THE SURVEY WAS COMPLETED ON XX/XX/XX.

3. THIS PLAT COMPLIES WITH APPLICABLE STATUTES OF THIS STATE AND ANY LOCAL ORDINANCES IN EFFECT ON THE DATE THAT THE SURVEY WAS COMPLETED, AND THE SURVEY WAS CONDUCTED IN ACCORDANCE WITH CHAPTER 625 OF THE NEVADA ADMINISTRATIVE CODE.

4. THE MONUMENTS DEPICTED ON THE PLAT ARE OF THE CHARACTER SHOWN, OCCUPY THE POSITIONS INDICATED, AND ARE OF SUFFICIENT DURABILITY.

5. THIS PLAT AND THE SURVEY ON WHICH IT IS BASED UPON WAS PERFORMED IN RECOGNITION OF THE RELATIVE POSITIONAL TECHNICAL ACCURACY SPECIFICATIONS AS PUBLISHED BY THE MANUFACTURER (SEE "NOTES")

XXXXXXXX X. XXXXXXX
PROFESSIONAL LAND SURVEYOR
NEVADA LICENSE NO. XXXX

ENVELOPING EXTERIOR CONTROL

THE FOLLOWING GEODETIC CONTROL POINTS WERE HELD FIXED DURING THE FINAL CONSTRAINED LEAST SQUARES ADJUSTMENT:

NAME	GENERAL PROVENANCE	LOCAL PROVENANCE
J171	NGS DATASHEETS, MAY 1995, CD ROM 1236900	MM, FL 002, PG 032
SLOAN	NGS DATASHEETS, MAY 1995, CD ROM 1236900	MM, FL 002, PG 032
GIS 841	LAS VEGAS VALLEY GEODETIC CONTROL NETWORK	RS, FL 088, PG 053
LVVWD BASE	www.lvvwd.com/lvvwd/data_share.html	RS, FL 096, PG 077
GOLDSTONE PEQ	www.ngs.noaa.gov/CORS/cors-data.html	NOT APPLICABLE

TRANSFORMATION-CONVERSION PARAMETERS

1. NAVD 88 ELEVATION FACTOR: $\frac{20,906,000}{20,906,000 + 2409.93 + 90.05} = 0.9998804$
2. PROJECT CENTRAL (MEAN E-W EXTENT) ELLIPSOID TO GRID FACTOR: 0.9999181
3. PROJECT COMBINED FACTORS:
   GROUND TO GRID: 0.9997985; GRID TO GROUND 1.0002015
4. EAST OF CENTRAL MERIDIAN ROTATIONAL PARAMETER: 00° 14' 45" CLOCKWISE FROM THIS PROJECT CARTESIAN COORDINATE SYSTEM TO THE STATE PLANE GRID SYSTEM.
5. ENGLISH/METRIC CONVERSIONS: METERS × $\left(\frac{3937}{1200}\right)$ = U.S. SURVEY FEET
   U.S. SURVEY FEET × $\left(\frac{1200}{3937}\right)$ = METERS

2D CONFORMAL TRANSFORMATION PARAMETERS

1. EQUATIONS: $aX - bY + TX = X2 + vx$; $bX + ay + ty = Y2 + vy$
2. WHERE: (X,Y) ARE STATE PLANE VALUES AND (x,y) ARE PROJECT COORDINATES.
3. a = 0.99978950; b = -0.00429111; Tx = 26742643.082; Ty = 759068.023
4. ROTATION = 0° 14' 45.3"
5. SCALE = 0.99980

HORIZONTAL LINE TABLE

LINE	DIRECTION	DISTANCE
L1	N 45°00'00" E	278.72'
L2	N 00°00'00" W	200.00'

HORIZONTAL CURVE TABLE

CURVE	RADIUS	LENGTH	TANGENT	CHORD	BEARING	DELTA
C1	850.00'	667.59'	352.08'	650.56'	N 22°30'00" E	45°00'00"
C2	850.00'	665.23'	350.70'	648.38'	N 22°34'46" E	44°50'28"

PROJECT CONTROL COORDINATE TABLE

POINT (NO.)	PROJECT COORDINATE INFORMATION — HORIZONTAL: U.S. SURVEY FEET, VERTICAL: NAVD 88 U.S. SURVEY FEET					NEVADA COORDINATE SYSTEM 1983 HARN BASED EAST ZONE (METERS)		GEOGRAPHIC COORDINATES NAD 83 HARN BASED		
	NORTHING	EASTING	ELEV	DESCRIPTION	PROVENANCE	NORTHING	EASTING	LATITUDE	LONGITUDE	ELLIPSOID HT. (FT)
1	20000.0000	20000.0000		F 3-1/2" DIA. AL CP PLS 2050	RS, FL XXX, PG XXX	8157242.484	237485.347	36° 10' 00.0000"	115° 10' 00.0000"	2145.26
2	22640.0000	20000.0000	2700.00	F 1-1/2" DIA. AL CP PLS 5072	PM, BK XXX, PG XXX	8158046.988	237488.800	36° 10' 26.1024"	115° 09' 59.7236"	2455.11
3	23960.0000	20000.0000	2600.00	F 1-1/2" DIA. AL CP PLS 4046	SD, BK XXX, PG XXX	8158449.240	237490.526	36° 10' 39.1536"	115° 09' 59.5854"	3222.86
4	25280.0000	20000.0000		F 3-1/4" DIA. BC BLM "1956"	BLM DEP RSVY, 9/58	8158851.492	237492.253	36° 10' 52.2048"	115° 09' 59.4472"	2890.03
5	25280.0000	21320.0000	2550.00	S 1-1/4" DIA. AL CP PLS 9677	SET PER REFERENCES	8158849.766	237894.505	36° 10' 52.0924"	115° 09' 43.3486"	2776.21

FOR EXAMPLE ONLY

1. THE CONTENTS OF THIS DRAWING WERE CREATED TO PROVIDE A GRAPHIC REPRESENTATION OF LVVWD AUTOCAD STANDARD REQUIREMENTS AND EXPECTATIONS FOR SURVEY SHEETS.
2. ALL TYPES OF INFORMATION ON THIS DRAWING ARE REQUIRED TO BE PROVIDED AS SHOWN FOR THE PROJECT SUBMITTAL TO BE ACCEPTED AND APPROVED (TYP).
3. USAGE OF A PREVIOUSLY RECORDED SURVEY BY ANOTHER FIRM AND/OR FOR ANOTHER PROJECT MUST HAVE PRIOR APPROVAL BY THE DISTRICT SURVEYOR. THEREFORE THE EMBEDDED RECORD OF SURVEY SHEET (DWG NO. SV1) MAY NOT BE REQUIRED. HOWEVER, ALL PROJECT HORIZONTAL AND VERTICAL CONTROL, BENCHMARKS, BASIS OF BEARINGS, AND SURVEY REFERENCES WILL BE REQUIRED TO BE SHOWN ON THE HORIZONTAL CONTROL PLAN SHEET (DWG NO. SV2).
4. THE DISTRICT SURVEYOR'S SIGNATURE WILL BE REQUIRED ON ALL SURVEY SHEET TITLEBLOCKS (RECOMMENDED BY:) FOR THE FINAL SUBMITTAL TO BE ACCEPTED AND APPROVED (TYP).

CONTROL COORDINATE TABLE ABBREVIATION LISTING

PROVENANCE:
RS = RECORD OF SURVEY
PM = PARCEL MAP
SD = SUBDIVISION MAP
MM = MISCELLANEOUS MAPS
FL = FILE (CLARK CO. RECORDER)
PG = PAGE (CLK. CO. RECORDER)
BK = BOOK (CLK. CO. RECORDER)
BLM = BUREAU OF LAND MANAGEMENT
GLO = GENERAL LAND OFFICE
DEP RSVY= DEPENDENT RESURVEY

DESCRIPTION:
F = FOUND
S = SET, THIS SURVEY
DIA. = DIAMETER (CIRCULAR)
CP = CAP
AL = ALUMINUM
BC = BRASS CAP (DISK)
"1958" = DATE SET BY BLM/GLO
PLS = PROFESSIONAL LAND SURVEYOR
HARN = HIGH ACCURACY REF. NETWORK

GENERAL:
ELEV = ELEVATION
NO. = NUMBER

RECORDER'S NOTE

ANY SUBSEQUENT CHANGES TO THIS MAP MAY BE DETERMINED BY REFERENCE TO THE COUNTY RECORDER'S CUMULATIVE MAP INDEX. NRS 278.5695

RECORD OF SURVEY
FOR THE
LAS VEGAS VALLEY WATER DISTRICT
BOUNDARY AND PROJECT CONTROL SECTION 34, TXXS, RXXE, M.D.M.

LAS VEGAS VALLEY WATER DISTRICT
"LEADERS IN SERVICE"
1001 S. VALLEY VIEW BOULEVARD
LAS VEGAS, NEVADA 89153
(702) 870-2011

CONTRACT	XXXXXXXX
LOCATION	XXXXXXXX
NAME	XXXXXXXX
DATE	XXXXXXXX
DRAWN	XXXXXXXX
CK'D	XXXXXXXX
H.SCALE	XXXXXXXX
V.SCALE	XXXXXXXX

SHEET 1 OF 1 SHEET(S)

NO.________
FILED AT THE REQUEST OF:
THE LAS VEGAS VALLEY WATER DISTRICT
DATE ____ AT ____ .M.
FILE ____ PAGE ____
OF SURVEYS
OFFICIAL RECORDS BOOK NO.
CLARK COUNTY NEVADA RECORDS
JUDITH A. VANDEVER, RECORDER
FEE ____ DEPUTY ____

FILE XXX PAGE XXX

LAS VEGAS VALLEY WATER DISTRICT
SPACE FOR CONSULTANT LOGO, NAME AND ADDRESS

VERIFY SCALE
1/2 0 1/2
BAR REPRESENTS ONE AND ONE-HALF INCHES ON ORIGINAL

XXXXXXXXXXXXXXXXXXXXXXXXXXXXX
XXXXXXXXXXXXXXXXXXXXXXXXXXXXX
IMBEDDED RECORD OF SURVEY

SCALE
HORIZ. SCALE 1"= XX'
VERT. SCALE 1"= X'

DRAWN BY: XXXXXXXXXXXXXXXX DATE
CHECKED BY: XXXXXXXXXXXXXXXX DATE
RECOMMENDED BY: DISTRICT SURVEYOR DATE
ACCEPTED BY: SHAWN P. MOLLUS DATE

REVISIONS:

SURVEYOR'S STAMP

CONTRACT NUMBER
XXXX
DRAWING NUMBER SV1
SHEET X OF X

LAS VEGAS VALLEY WATER DISTRICT

SPACE FOR CONSULTANT LOGO, NAME AND ADDRESS

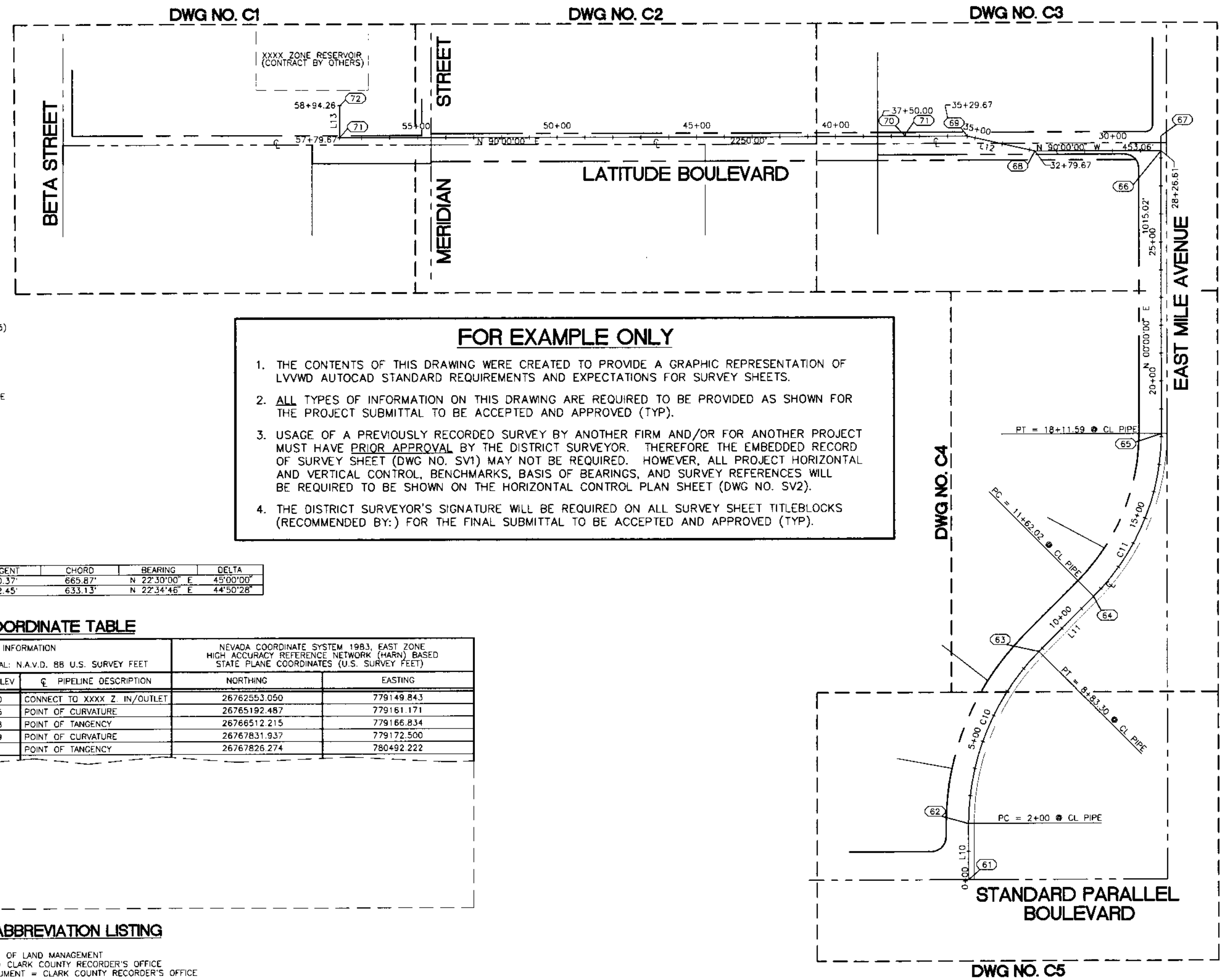

FOR EXAMPLE ONLY

1. THE CONTENTS OF THIS DRAWING WERE CREATED TO PROVIDE A GRAPHIC REPRESENTATION OF LVVWD AUTOCAD STANDARD REQUIREMENTS AND EXPECTATIONS FOR SURVEY SHEETS.
2. ALL TYPES OF INFORMATION ON THIS DRAWING ARE REQUIRED TO BE PROVIDED AS SHOWN FOR THE PROJECT SUBMITTAL TO BE ACCEPTED AND APPROVED (TYP).
3. USAGE OF A PREVIOUSLY RECORDED SURVEY BY ANOTHER FIRM AND/OR FOR ANOTHER PROJECT MUST HAVE PRIOR APPROVAL BY THE DISTRICT SURVEYOR. THEREFORE THE EMBEDDED RECORD OF SURVEY SHEET (DWG NO. SV1) MAY NOT BE REQUIRED. HOWEVER, ALL PROJECT HORIZONTAL AND VERTICAL CONTROL, BENCHMARKS, BASIS OF BEARINGS, AND SURVEY REFERENCES WILL BE REQUIRED TO BE SHOWN ON THE HORIZONTAL CONTROL PLAN SHEET (DWG NO. SV2).
4. THE DISTRICT SURVEYOR'S SIGNATURE WILL BE REQUIRED ON ALL SURVEY SHEET TITLEBLOCKS (RECOMMENDED BY:) FOR THE FINAL SUBMITTAL TO BE ACCEPTED AND APPROVED (TYP).

LEGEND

- GENERAL EXTENTS OF PLAN AND PROFILE SHEETS (DWG NO. C1– DWG NO. C5)
- PIPE ALIGNMENT
- SECTION LINE
- APPROXIMATE PROPERTY LINE
- CENTER LINE
- RIGHT OF WAY LINE

HORIZONTAL LINE TABLE

LINE	DIRECTION	DISTANCE
L10	N 00°00'00" W	200.00'
L11	N 45°00'00" E	278.72'
L12	N 77°30'00" W	250.00'
L13	N 00°00'00" E	114.59'

HORIZONTAL CURVE TABLE

CURVE	RADIUS	LENGTH	TANGENT	CHORD	BEARING	DELTA
C10	870.00'	683.30'	360.37'	665.87'	N 22°30'00" E	45°00'00"
C11	830.00'	649.58'	342.45'	633.13'	N 22°34'46" E	44°50'28"

PROJECT PIPELINE CONTROL COORDINATE TABLE

POINT (NO.)	PROJECT COORDINATE INFORMATION — HORIZONTAL: U.S. SURVEY FEET — VERTICAL: N.A.V.D. 88 U.S. SURVEY FEET				NEVADA COORDINATE SYSTEM 1983, EAST ZONE HIGH ACCURACY REFERENCE NETWORK (HARN) BASED STATE PLANE COORDINATES (U.S. SURVEY FEET)	
	NORTHING	EASTING	INVERT ELEV	℄ PIPELINE DESCRIPTION	NORTHING	EASTING
61	22640.0000	20000.0000	2700.00	CONNECT TO XXXX Z. IN/OUTLET	26762553.050	779149.843
62	22688.1234	20055.4567	2702.45	POINT OF CURVATURE	26765192.487	779161.171
63	23960.0000	20000.0000	2706.78	POINT OF TANGENCY	26766512.215	779166.834
64	23960.0000	20000.0000	2708.89	POINT OF CURVATURE	26767831.937	779172.500
65	25280.0000	21320.0000	2711.71	POINT OF TANGENCY	26767826.274	780492.222

CONTROL COORDINATE TABLE ABBREVIATION LISTING

DESCRIPTION:
US = UNITED STATES OF AMERICA
GLO = GENERAL LAND OFFICE
DEP RSVY= DEPENDENT RESURVEY
BLM = BUREAU OF LAND MANAGEMENT
FILE & PAGE = CLARK COUNTY RECORDER'S OFFICE
BOOK & INSTRUMENT = CLARK COUNTY RECORDER'S OFFICE

ASSESSOR PARCEL NUMBERS

APN-BBB-SS-EEE-PPP

- INDIVIDUAL PARCEL NUMBER
- EIGHTY ACRE PARCEL PAGE NUMBER
- SECTION NUMBER
- ASSESSOR'S BOOK NUMBER
- ASSESSOR'S PARCEL NUMBER

VERIFY SCALE
1/2 0 1/2 1
BAR REPRESENTS ONE AND ONE-HALF INCHES ON ORIGINAL

XXXXXXXXXXXXXXXXXXXXXXXXX
XXXXXXXXXXXXXXXXXXXXXXXXX

HORIZONTAL CONTROL PLAN

SCALE
HORIZ. SCALE 1"= XX'
VERT. SCALE 1"= X'

DRAWN BY: XXXXXXXXXXXXXXXX XX/XX/XX
CHECKED BY: XXXXXXXXXXXXXXXX XX/XX/XX
RECOMMENDED BY:
DISTRICT SURVEYOR DATE
ACCEPTED BY:
SHAWN P. MOLLUS DATE

SURVEYOR'S STAMP

REVISIONS:

CONTRACT NUMBER
XXXX
DRAWING NUMBER SV2
SHEET X OF X

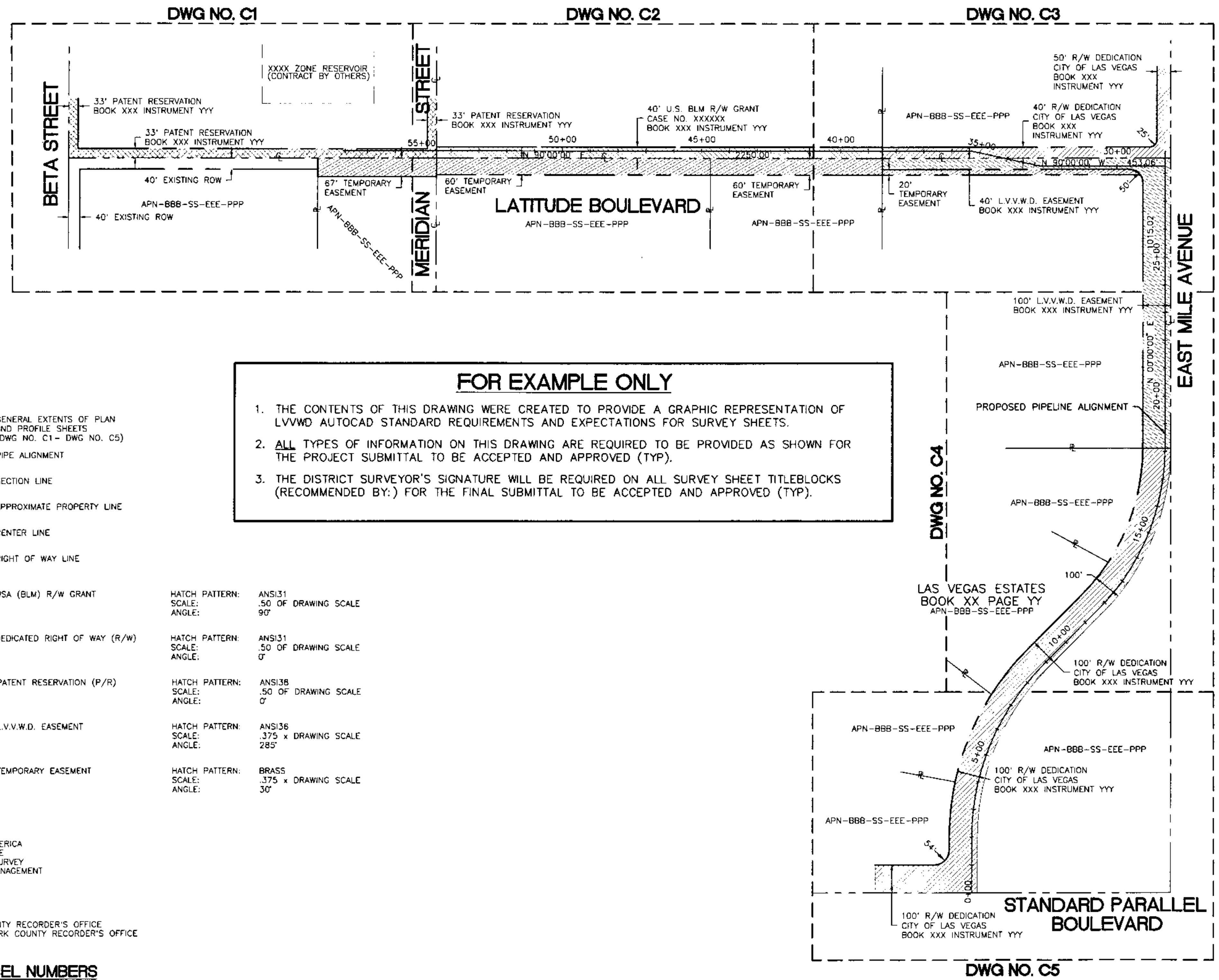

FOR EXAMPLE ONLY

1. THE CONTENTS OF THIS DRAWING WERE CREATED TO PROVIDE A GRAPHIC REPRESENTATION OF LVVWD AUTOCAD STANDARD REQUIREMENTS AND EXPECTATIONS FOR SURVEY SHEETS.
2. ALL TYPES OF INFORMATION ON THIS DRAWING ARE REQUIRED TO BE PROVIDED AS SHOWN FOR THE PROJECT SUBMITTAL TO BE ACCEPTED AND APPROVED (TYP).
3. THE DISTRICT SURVEYOR'S SIGNATURE WILL BE REQUIRED ON ALL SURVEY SHEET TITLEBLOCKS (RECOMMENDED BY:) FOR THE FINAL SUBMITTAL TO BE ACCEPTED AND APPROVED (TYP).

LEGEND

GENERAL EXTENTS OF PLAN AND PROFILE SHEETS (DWG NO. C1- DWG NO. C5)		
PIPE ALIGNMENT		
SECTION LINE		
APPROXIMATE PROPERTY LINE		
CENTER LINE		
RIGHT OF WAY LINE		
USA (BLM) R/W GRANT	HATCH PATTERN: SCALE: ANGLE:	ANSI31 .50 OF DRAWING SCALE 90°
DEDICATED RIGHT OF WAY (R/W)	HATCH PATTERN: SCALE: ANGLE:	ANSI31 .50 OF DRAWING SCALE 0°
PATENT RESERVATION (P/R)	HATCH PATTERN: SCALE: ANGLE:	ANSI38 .50 OF DRAWING SCALE 0°
L.V.V.W.D. EASEMENT	HATCH PATTERN: SCALE: ANGLE:	ANSI36 .375 x DRAWING SCALE 285°
TEMPORARY EASEMENT	HATCH PATTERN: SCALE: ANGLE:	BRASS .375 x DRAWING SCALE 30°

ABBREVIATIONS

US = UNITED STATES OF AMERICA
GLO = GENERAL LAND OFFICE
DEP RSVY= DEPENDENT RESURVEY
BLM = BUREAU OF LAND MANAGEMENT

DESCRIPTIONS

FILE & PAGE = CLARK COUNTY RECORDER'S OFFICE
BOOK & INSTRUMENT = CLARK COUNTY RECORDER'S OFFICE

ASSESSOR PARCEL NUMBERS

APN-BBB-SS-EEE-PPP

- PPP — INDIVIDUAL PARCEL NUMBER
- EEE — EIGHTY ACRE PARCEL PAGE NUMBER
- SS — SECTION NUMBER
- BBB — ASSESSOR'S BOOK NUMBER
- APN — ASSESSOR'S PARCEL NUMBER

NOTE:
1"=200' SCALE (MAX) PERMITTED ONLY, MORE THAN ONE SHEET MAY BE REQUIRED.

LAS VEGAS VALLEY WATER DISTRICT

SPACE FOR CONSULTANT LOGO, NAME AND ADDRESS

VERIFY SCALE
1/2 0 1/2 1
BAR REPRESENTS ONE AND ONE-HALF INCHES ON ORIGINAL

XXXXXXXXXXXXXXXXXXXXXXXXXXXXX
XXXXXXXXXXXXXXXXXXXXXXXXXXXXX

RIGHT-OF-WAY SHEET

SCALE
HORIZ. SCALE 1" = XX'
VERT. SCALE 1" = X'

DRAWN BY: XXXXXXXXXXXXXXXXX XX/XX/XX
CHECKED BY: XXXXXXXXXXXXXXXXX XX/XX/XX
RECOMMENDED BY: DISTRICT SURVEYOR DATE
ACCEPTED BY: SHAWN P. MOLLUS DATE

SURVEYOR'S STAMP

REVISIONS:

CONTRACT NUMBER
XXXX
DRAWING NUMBER SV3
SHEET X OF X

LAS VEGAS VALLEY WATER DISTRICT
DESIGN DETAIL STANDARDS

TABLE OF CONTENTS

DESCRIPTION	REV. DATE	DWG NO.
PIPELINES		
Lap-Welded Slip Joint Alternate "A" Field Welded	08-04-06	PL01-1
Lap-Welded Slip Joint Alternate "B" Field Welded	08-04-06	PL01-2
Carnegie Joint Field Welded	08-04-06	PL01-3
Carnegie Joint	08-04-06	PL01-4
Rolled - Groove Rubber Gasket Joint	08-04-06	PL01-5
Butt Strap Joint at MLCP Connections to Existing MLCP	08-04-06	PL01-6
Butt Strap Joint at MLCP Connections to Existing SCCP	08-04-06	PL01-7
Rolled - Groove Joint Field Welded	08-04-06	PL01-8
TRENCH AND ENCASEMENT DETAILS		
Trench Backfill – Paved Areas	01-26-10	PL02-1
Trench Backfill – Unpaved Areas	07-02-08	PL02-2
Trench Backfill – Paved and Unpaved Areas (NDOT R/W)	07-02-08	PL02-3
Notes for Paved and Unpaved Areas	07-02-08	PL02-4
Not Used		PL02-5
Pipe Locator Ribbon and Locator Ball Installation	11-02-10	PL02-6
Structural Support at Crossings	07-10-03	PL02-7
Single Pipe Reinforced Encasement	07-20-06	PL02-8
Existing Sewer Service Lateral Replacement	10-29-07	PL02-9
Sewer and Storm Drain Crossing Encasement	10-29-07	PL02-10
VALVE VAULT STRUCTURAL DETAILS (30-INCH THROUGH 72-INCH PIPELINES)		
Sectional Plan	07-10-03	PL03-1
Roof Plan	03-23-05	PL03-2
Waterstop Detail	07-10-03	PL03-3
Wall Opening-Diagonal Reinforcement Detail	07-10-03	PL03-4
Pipe Location Table	06-01-01	PL03-5
Vault Dimension Table	03-31-03	PL03-6
Notes	06-06-01	PL03-7
Not Used		PL03-8
Section	03-23-05	PL03-A
Section	12-26-03	PL03-B
Removable Concrete Slab Section	03-23-05	PL03-C

LAS VEGAS VALLEY WATER DISTRICT
DESIGN DETAIL STANDARDS

TABLE OF CONTENTS

DESCRIPTION	REV. DATE	DWG NO.
VALVE VAULT PIPING DETAILS (30-INCH THROUGH 72-INCH PIPELINES)		
Piping Plan – Mechanical Coupling	03-23-05	PL04-1
Mechanical Coupling with Spacer	07-08-03	PL04-2
Not Used		PL04-3
Component Descriptions – Mechanical Coupling	07-02-08	PL04-4
Piping Plan – Dismantling Joint	07-02-08	PL04-5
Component Descriptions – Dismantling Joint	07-02-08	PL04-6
Section	04-08-04	PL04-A
Piping Profile Section - Mechanical Coupling	07-02-08	PL04-B
Section	07-02-08	PL04-C
Piping Profile Section – Dismantling Joint	07-02-08	PL04-D
VALVE VAULT COMPONENT DETAILS (30-INCH THROUGH 72-INCH PIPELINES)		
Pipe Support Detail	07-10-03	PL05-1
Wall Penetration Detail	12-26-03	PL05-2
Sealant Groove Detail	07-10-03	PL05-3
Insulating Flange Set Detail	12-27-04	PL05-4
Corporation Stop Detail	07-10-03	PL05-5
Ladder Installation Details	11-03-09	PL05-6
Valve Box on Vault Detail	06-20-07	PL05-7
Universal Joint Detail	07-10-03	PL05-8
FIBER OPTIC DETAILS		
Fiber Optic Pull Box Location	07-02-08	PL06-1
Section	12-06-05	PL06-1A
Fiber Optic Conduit Trench Location	02-14-05	PL06-2
Fiber Optic Splice Pit Assembly	03-02-06	PL06-3
Conduit Penetration For Vault Structures	07-10-03	PL06-4

LAS VEGAS VALLEY WATER DISTRICT
DESIGN DETAIL STANDARDS

TABLE OF CONTENTS

DESCRIPTION	REV. DATE	DWG NO.
ACCESS MANHOLE ASSEMBLY AND MANWAY DETAILS		
Access Manhole Plan	12-26-03	PL08-1
24-Inch Pipe Access Manway	01-27-04	PL08-2
30-Inch Pipe Access Manway	01-27-04	PL08-2A
24-Inch Vault Access Manway	09-12-08	PL08-3
Manhole Cover and Collar Installation	06-20-07	PL08-4
Access Manhole Plan	12-26-03	PL08-5
Fiber Optic Splice Pit Penetration Detail	07-07-06	PL08-6
Precast to CIP Conc Base JT Detail	07-10-03	PL08-7
Typical at Ends of All Structures and Encasements	07-10-03	PL08-8
Access Manhole Encasement	12-26-03	PL08-9
Section	07-10-03	PL08-A
Section	12-26-03	PL08-B
Section	07-07-03	PL08-C
Section	12-26-03	PL08-D
AIR VALVE, BLOW-OFF AND COVER, AND CASING ASSEMBLIES		
Air Valve Assembly for 2" and 4" Valves (Steel Enclosure)	07-02-08	PL09-1
Air Valve Assembly for 4" Valves	07-02-08	PL09-1A
Air Valve Assembly for 2" Valves	07-02-08	PL09-1B
Air Valve Assembly for 6" Valves	03-02-06	PL09-1C
Blow-Off Assembly and Cover Detail	09-10-08	PL09-2
Casing Assembly Detail	03-05-06	PL09-3
APPURTENANCES DETAILS		
Connection of New Pipe to Existing Pipe for MLCP Only	07-07-03	PL10-1
Manual Air Release Assembly (Steel Pipe)	07-02-08	PL10-2
Manual Air Release Assembly (Alternate Method)	07-02-08	PL10-3
Manual Air Release Assembly	07-02-08	PL10-4
Valved Outlet Detail	03-05-06	PL10-5
Pipe Access Assembly	07-07-03	PL10-6
Pipe Access Assembly Marker	07-07-03	PL10-7
Valve Box Installation	08-05-09	PL10-8
Traffic Box Installation	07-02-08	PL10-8A
Standard Valve Box Cover	04-19-04	PL10-8B
Valve Stem Extension	11-03-09	PL10-8C
20" and 24" Direct Buried Gate Valve Installation (MLCP)	03-05-06	PL10-9
20" and 24" Direct Buried Gate Valve Installation (DIP)	03-05-06	PL10-10
20" and 24" Valved Outlet with Direct Buried Gate Valve	03-05-06	PL10-11

LAS VEGAS VALLEY WATER DISTRICT
DESIGN DETAIL STANDARDS

TABLE OF CONTENTS

DESCRIPTION	REV. DATE	DWG NO.
Wet Tap of Existing Steel Mains	03-05-06	PL10-12
Carsonite Marker Installation	09-14-06	PL10-13
THRUST BLOCK, ANCHOR BLOCK, AND CONNECTION DETAILS		
Thrust Block Installation	03-02-06	PL11-1
Anchor Block Details for In-Line Reducers and Gate Valves	03-02-06	PL11-2
CATHODIC PROTECTION DETAILS		
Type "T" Test Station without Anodes	03-09-05	PL12-1
Test Box Detail – Typical	09-08-08	PL12-2
Standard Test Board Installation	06-20-07	PL12-3A
Test Board for Joint Test Station	06-20-07	PL12-3B
Test Board Detail – Typical	07-07-03	PL12-3C
Joint Test Station with Anodes for Stray Current Mitigation	07-07-03	PL12-4
Test Lead or Anode Lead Connection to Pipe Joint Carnegie or Rolled – Groove Detail	07-07-03	PL12-5
Carnegie Joint Bonding Detail	07-07-03	PL12-6
Bonding Clip Detail	07-07-03	PL12-7
Rolled – Groove Joint Bonding Detail	07-07-03	PL12-8
Push-On Joint Bond Detail Ductile Iron Pipe	07-07-03	PL12-9
General Notes	10-08-08	PL12-10
Test Station Installation on Existing Pipelines with Pre-Packaged Anodes	03-12-05	PL12-11
Joint Bonding Detail for Existing SCCP, PCCP, and MCLP	03-12-05	PL12-12
Pre-Packaged Anode Installation Directly on Pipeline	03-12-05	PL12-13
WATER QUALITY SAMPLING STATION		
Water Quality Test Station Installation	11-02-10	PL13-1
Component Descriptions	03-09-05	PL13-2

LAS VEGAS VALLEY WATER DISTRICT
DESIGN DETAIL STANDARDS

TABLE OF CONTENTS

DESCRIPTION	REV. DATE	DWG NO.
SYSTEM IMPROVEMENTS STANDARD DETAILS		
Compact Backflow Assembly	07-07-03	PL14-1
Fire Hydrant Installation	07-07-03	PL15-1
Deep Fire Hydrant Installation	11-02-10	PL15-1A
Fire Hydrant Location	07-07-03	PL15-2
Excavation for Wet Taps	07-07-03	PL15-3
Vehicular Protection Bollard	04-14-05	PL15-4
Notes	11-02-01	PL15-5
Line Stopping Support Detail	07-07-03	PL15-6
Pressure Gauge Connection Detail	06-20-07	PL15-7
Service Installation for Commercial and Residential Greater Than 1/4 Acre Gross 5/8", 1", 1-1/2" and 2" Meter Sizes	07-07-03	PL16-1
Legend and Notes	05-14-03	PL16-2
Service Installation for Residential Less Than or Equal to 1/4 Acre Gross 5/8" and 3/4" Meter Sizes	07-07-03	PL16-3
Legend and Notes	05-14-03	PL16-4
Meter Box Detail	12-27-04	PL16-5
Single Door Access Hatch	11-23-09	PL17-1
Double Door Access Hatch	11-23-09	PL17-2
Existing Vault Structure Abandonment	11-10-03	PL18-1

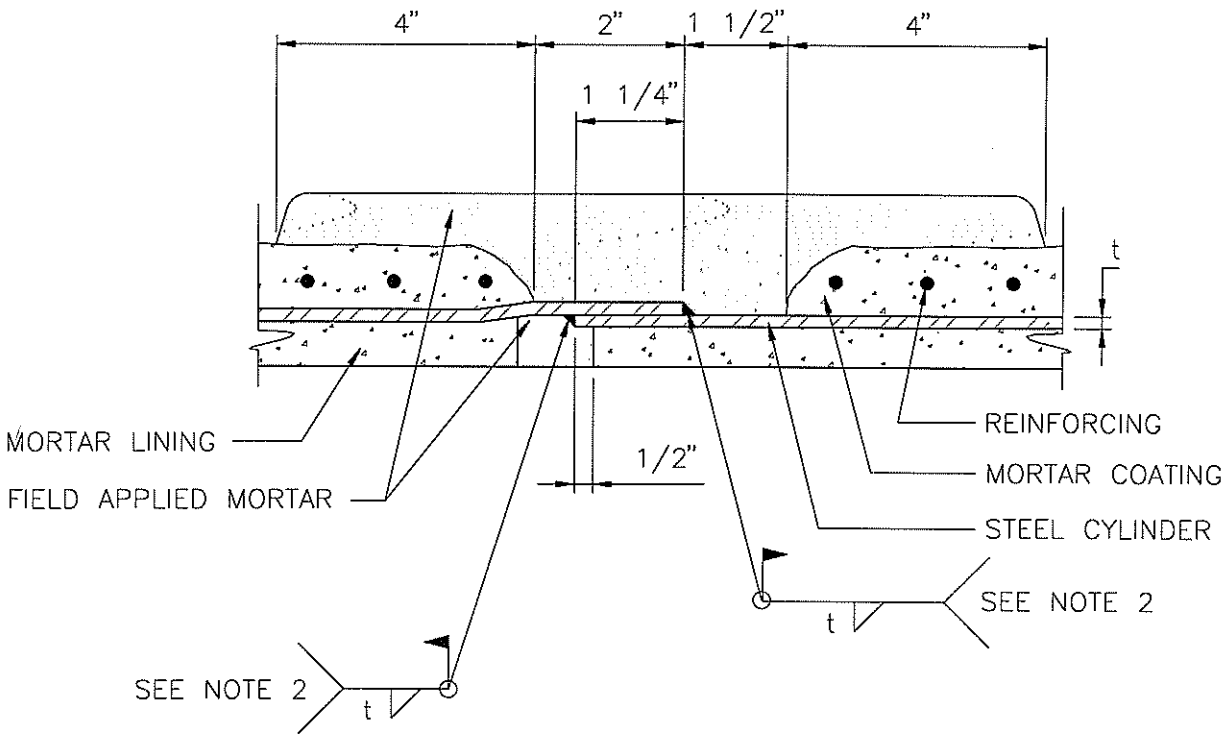

NOTES:

1. SEE SPECS SEC 02511 FOR MORTAR LINED AND COATED STEEL PIPE.
2. WELD OUTSIDE ON PIPE SMALLER THAN 36". WELD INSIDE ON PIPE GREATER THAN OR EQUAL TO 36", UNLESS APPROVED BY ENGINEER.

LAP - WELDED SLIP JOINT
ALTERNATE "A" FIELD WELDED

NOT TO SCALE PL01-1 080406

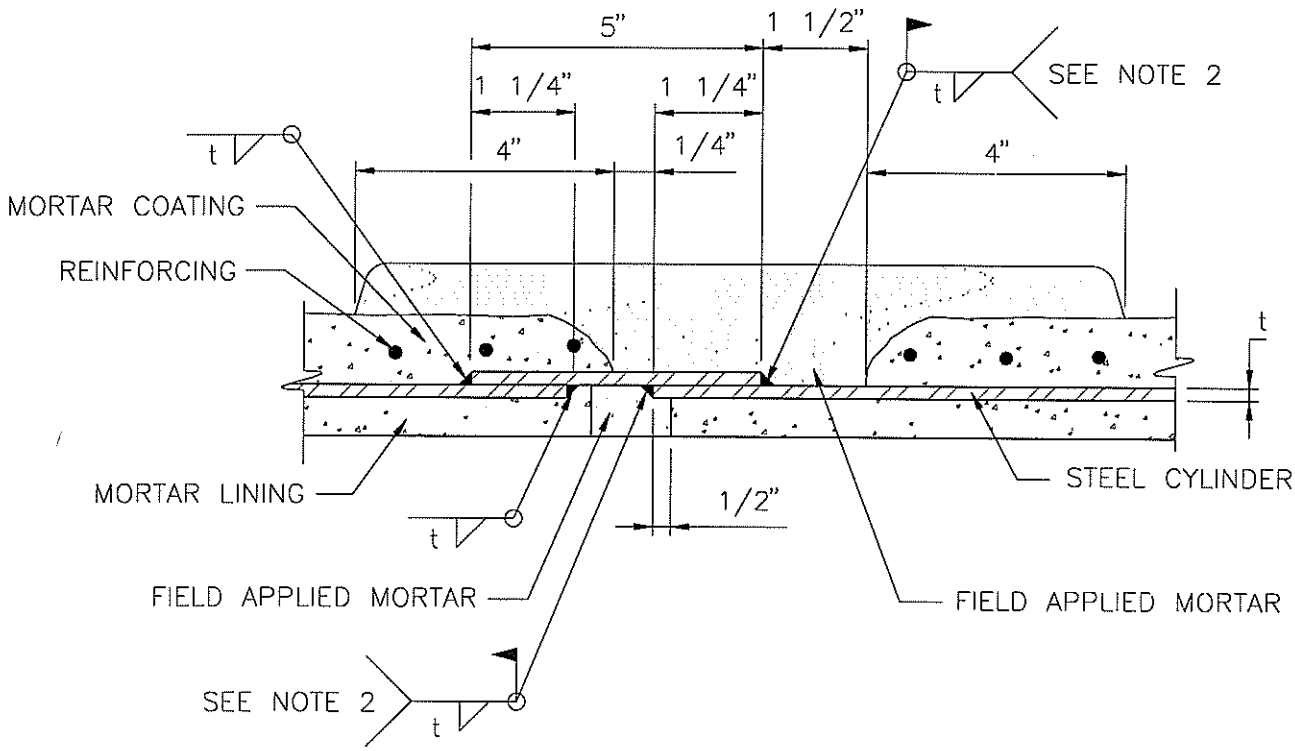

NOTES:

1. SEE SPECS SEC 02511 FOR MORTAR LINED AND COATED STEEL PIPE.
2. WELD OUTSIDE ON PIPE SMALLER THAN 36". WELD INSIDE ON PIPE GREATER THAN OR EQUAL TO 36", UNLESS APPROVED BY ENGINEER.

LAP - WELDED SLIP JOINT
ALTERNATE "B" FIELD WELDED

NOT TO SCALE PL01-2 080406

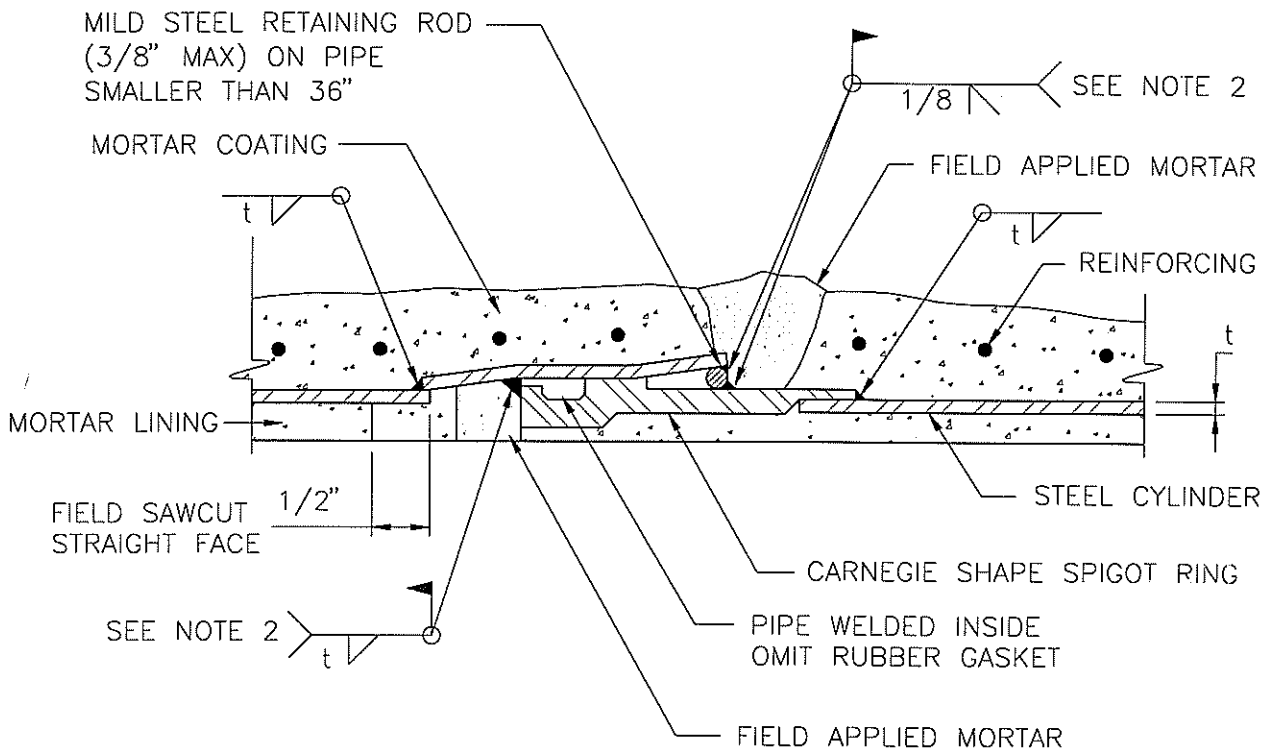

NOTES:

1. SEE SPECS SEC 02511 FOR MORTAR LINED AND COATED STEEL PIPE.
2. WELD OUTSIDE ON PIPE SMALLER THAN 36". WELD INSIDE ON PIPE GREATER THAN OR EQUAL TO 36", UNLESS APPROVED BY ENGINEER.

CARNEGIE JOINT FIELD WELDED

NOT TO SCALE PL01-3 080406

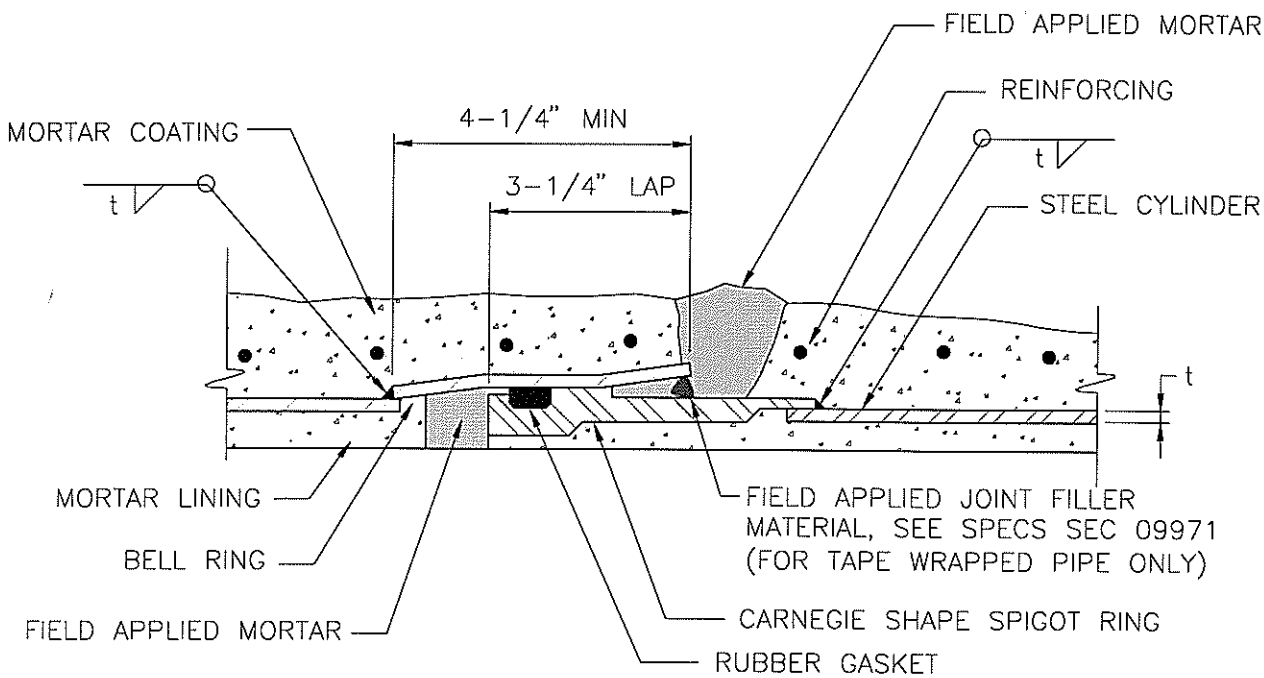

NOTE:

SEE SPECS SEC 02511 FOR MORTAR LINED AND COATED STEEL PIPE.

CARNEGIE JOINT

NOT TO SCALE PL01-4 080406

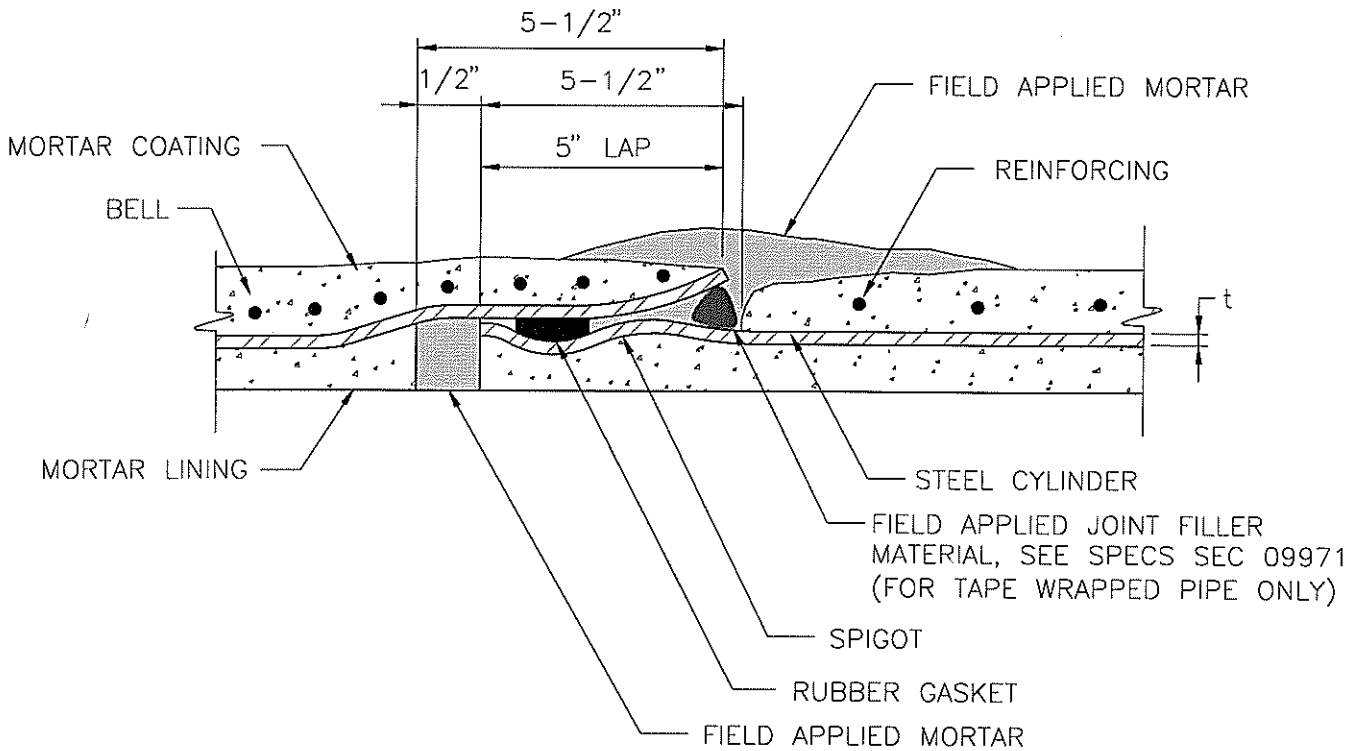

NOTE:

SEE SPECS SEC 02511 FOR MORTAR LINED AND COATED STEEL PIPE.

ROLLED - GROOVE RUBBER GASKET JOINT

NOT TO SCALE

PL01-5 080406

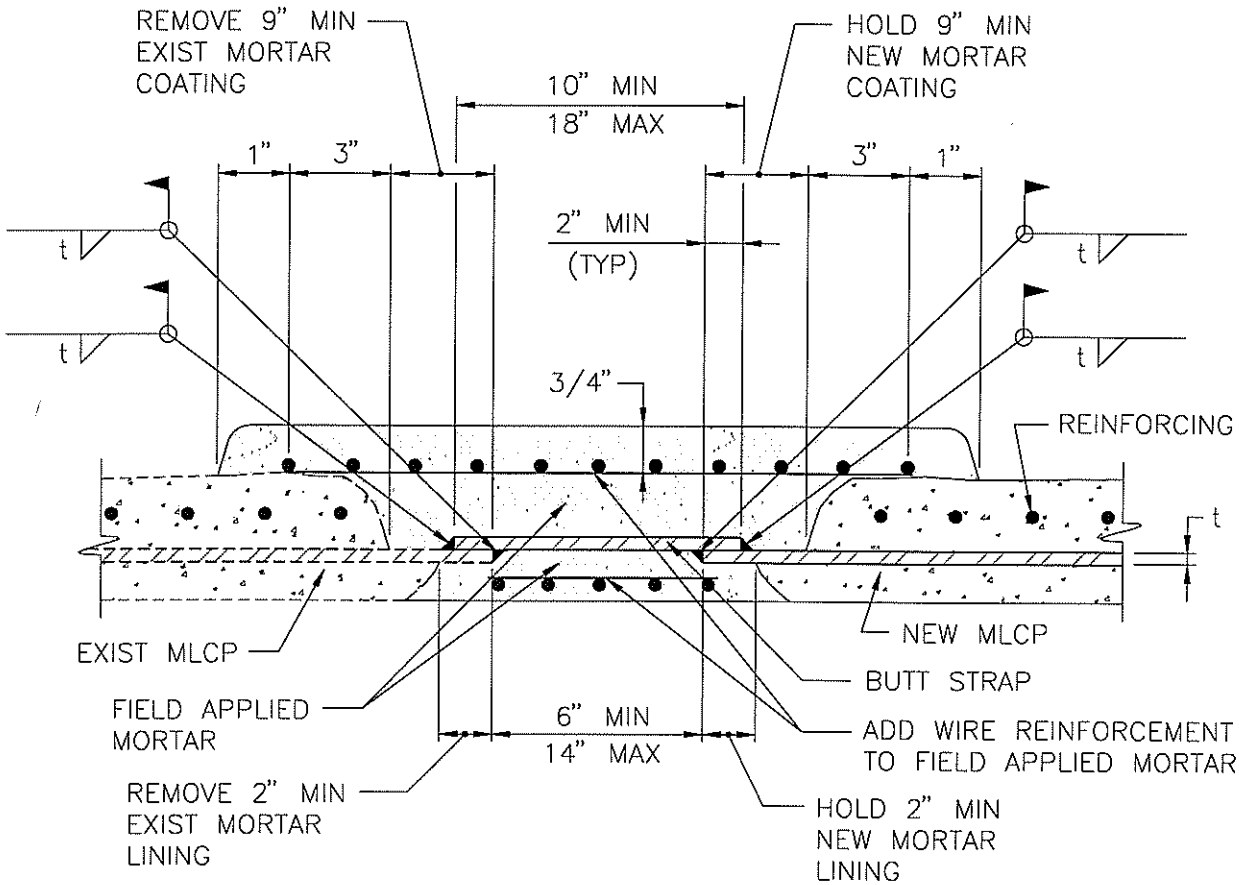

NOTE:

SEE SPECS SEC 02511 FOR MORTAR LINED AND COATED STEEL PIPE.

BUTT STRAP JOINT AT MLCP CONNECTIONS TO EXISTING MLCP

NOT TO SCALE PL01-6 080406

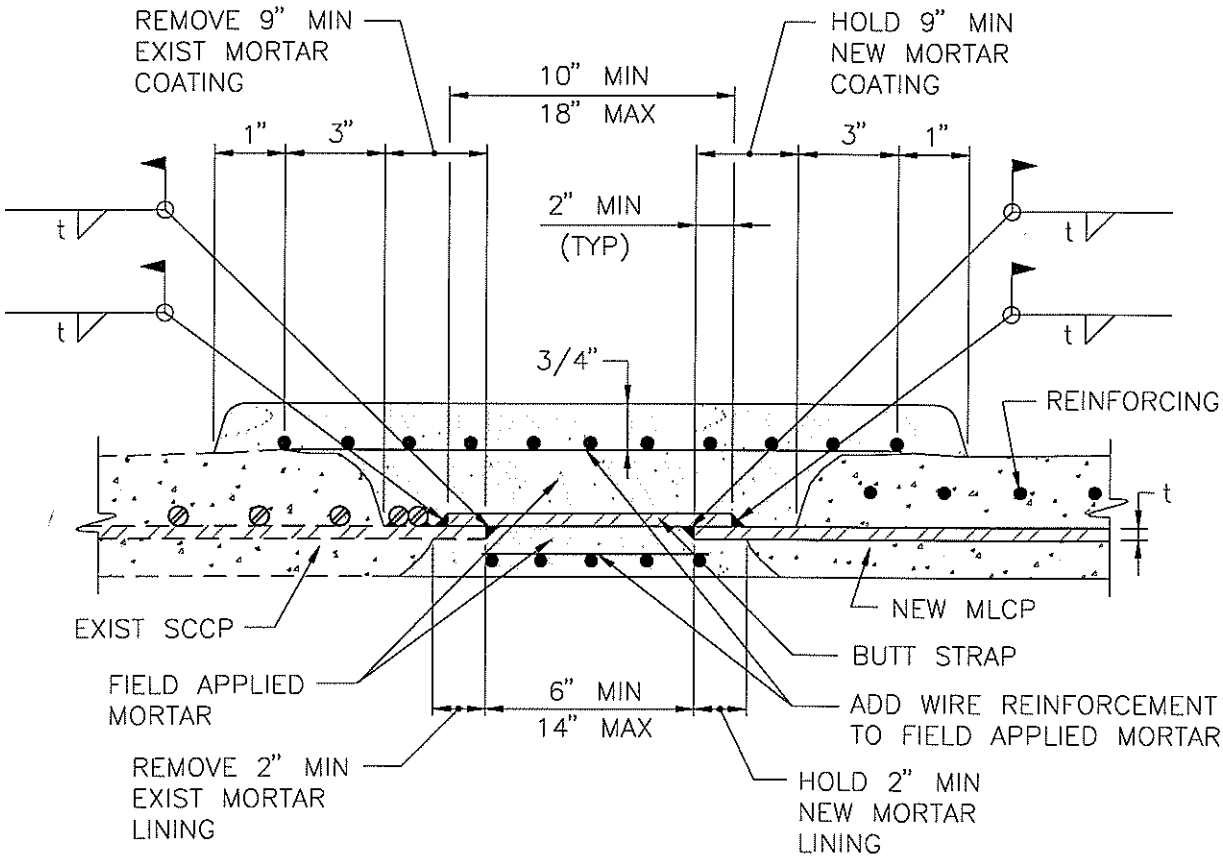

NOTES:

1. SEE SPECS SEC 02511 FOR MORTAR LINED AND COATED STEEL PIPE.

2. BEFORE ANY CUT IS MADE TO THE EXISTING SCCP, TACK WELD THE EXISTING SPIRAL ROD WRAP OUTSIDE OF THE CUT AREA TO MAINTAIN TENSION, THEN CUT THE ROD WRAP AT APPROXIMATELY THE CENTER OF THE AREA TO BE REMOVED AND USING THE EXCESS ROD WRAP, TENSION 1-1/2 FULL OF THE ROD WRAP SNUGLY AROUND AND WELD TO THE CYLINDER PARALLEL TO WHERE THE CUT IN THE EXISTING SCCP IS TO BE MADE.

BUTT STRAP JOINT AT MLCP CONNECTIONS TO EXISTING SCCP

NOT TO SCALE PL01-7 080406

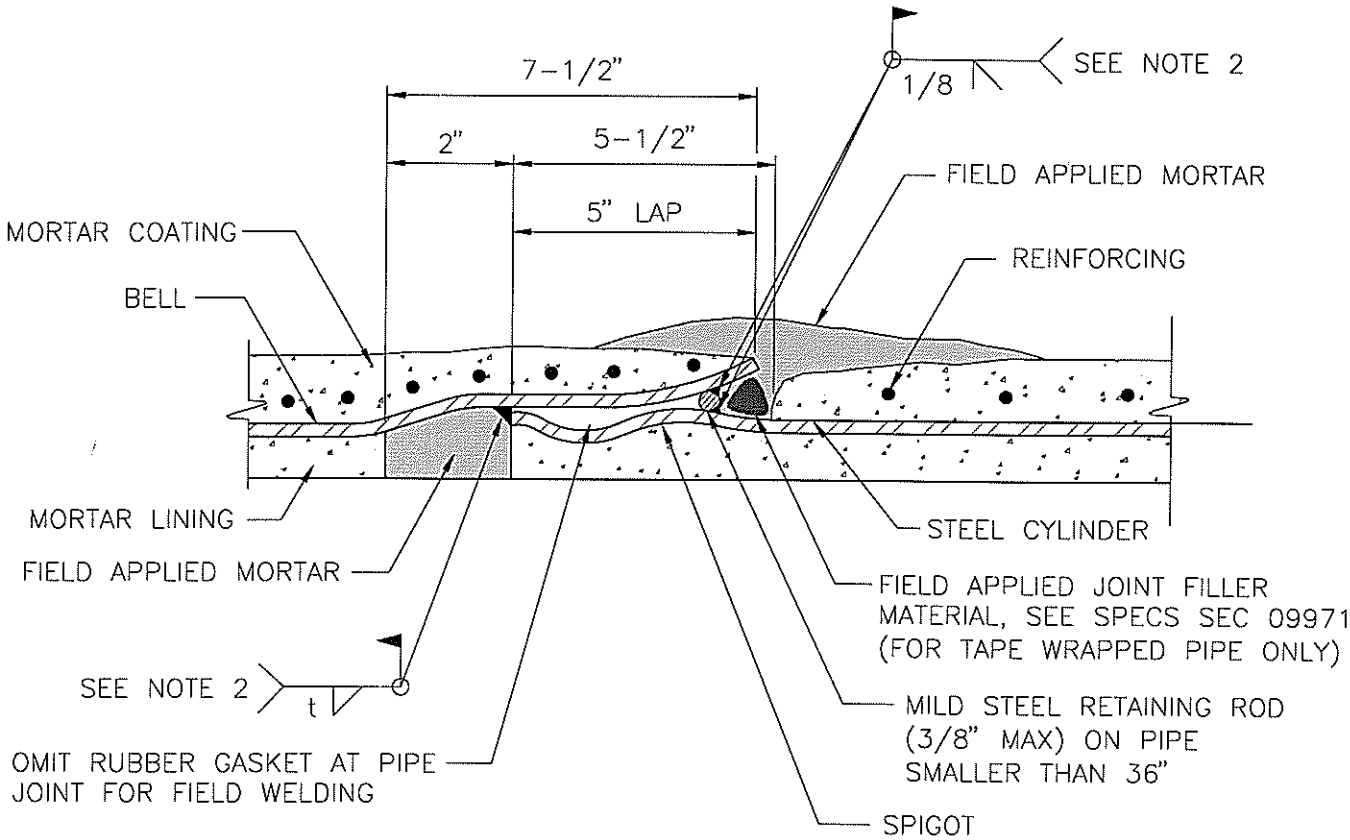

NOTES:

1. SEE SPECS SEC 02511 FOR MORTAR LINED AND COATED STEEL PIPE.
2. WELD OUTSIDE ON PIPE SMALLER THAN 36". WELD INSIDE ON PIPE GREATER THAN OR EQUAL TO 36", UNLESS APPROVED BY ENGINEER.

ROLLED - GROOVE JOINT FIELD WELDED

NOT TO SCALE PL01-8 080406

SEE PL02-4 FOR DESC. AND NOTES. FREEZE TEXT5 LAYER TO REMOVE THIS NOTE.

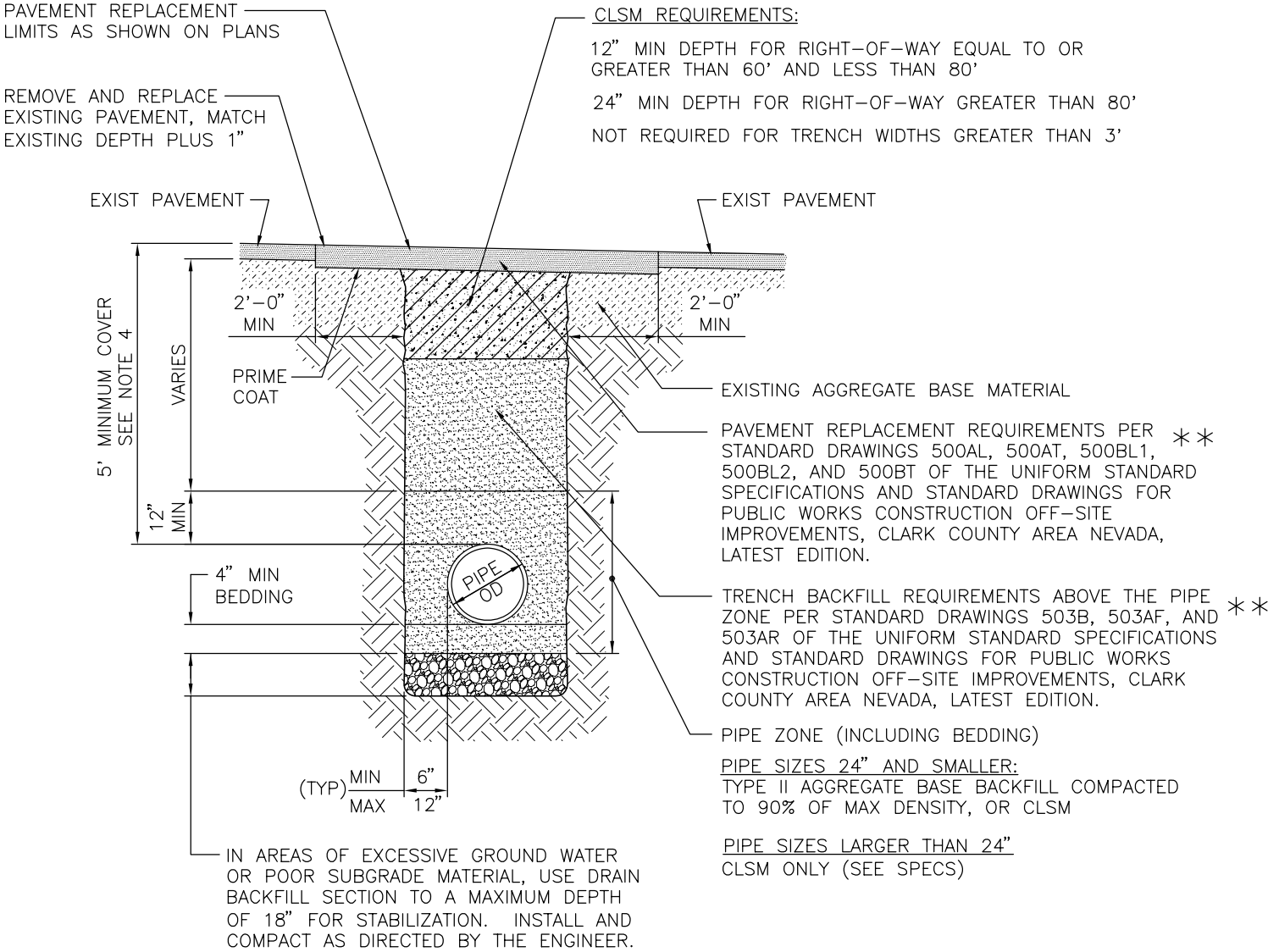

TRENCH BACKFILL - PAVED AREAS

NOT TO SCALE PL02-1 012610

**

LIST ONLY THE UNIFORM STANDARD DRAWING (USD) NUMBER AS DETERMINED BY THE DESIGN ENGINEER BASED ON THE PROJECT REQUIREMENTS. IF THE PROJECT REQUIRES MORE THAN ONE USD TO BE LISTED, LIST THE LIMITS FOR EACH USD BY STATIONING IN A TABLE WITH THE TRENCH SECTION ABOVE OR IDENTIFY THE USD LIMITS AREAS ON ALL CIVIL PLANS.

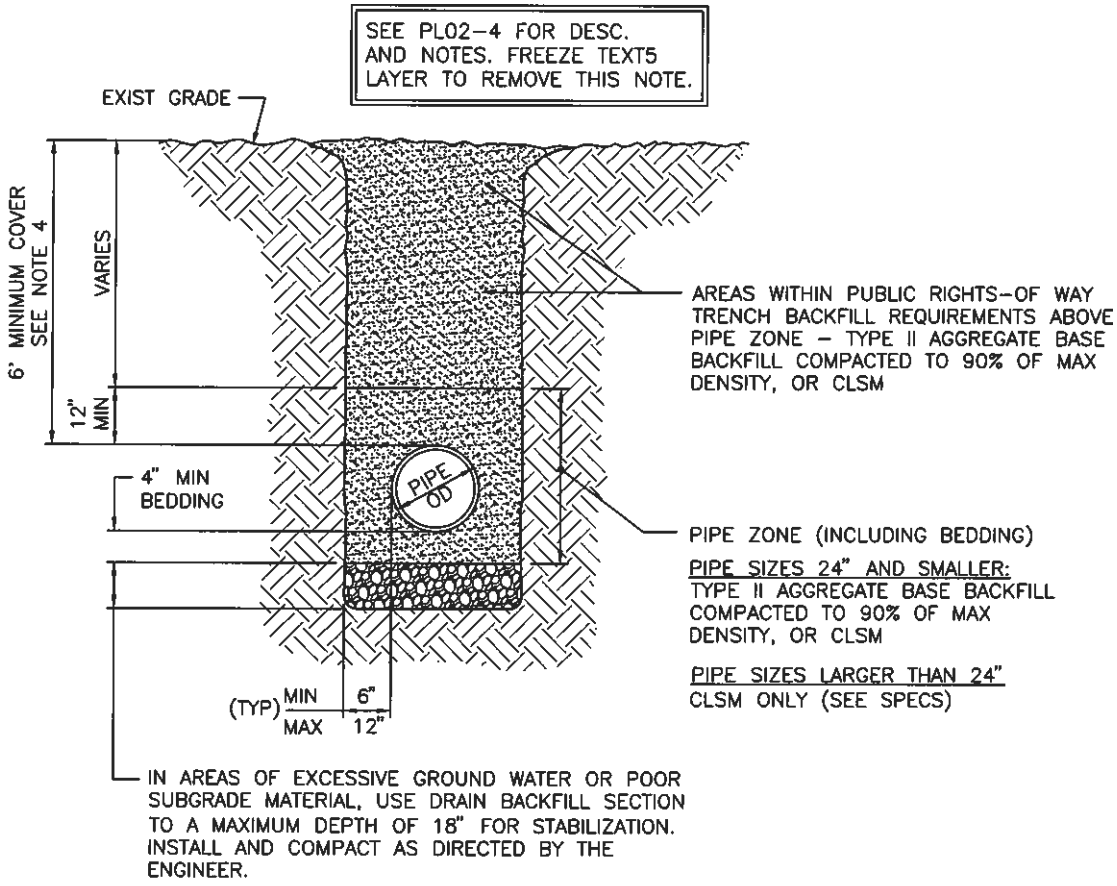

TRENCH BACKFILL - UNPAVED AREAS

NOT TO SCALE PL02-2 070208

SEE PL02–4 FOR TRENCH SECTION GENERAL NOTES.
DELETE THIS NOTE

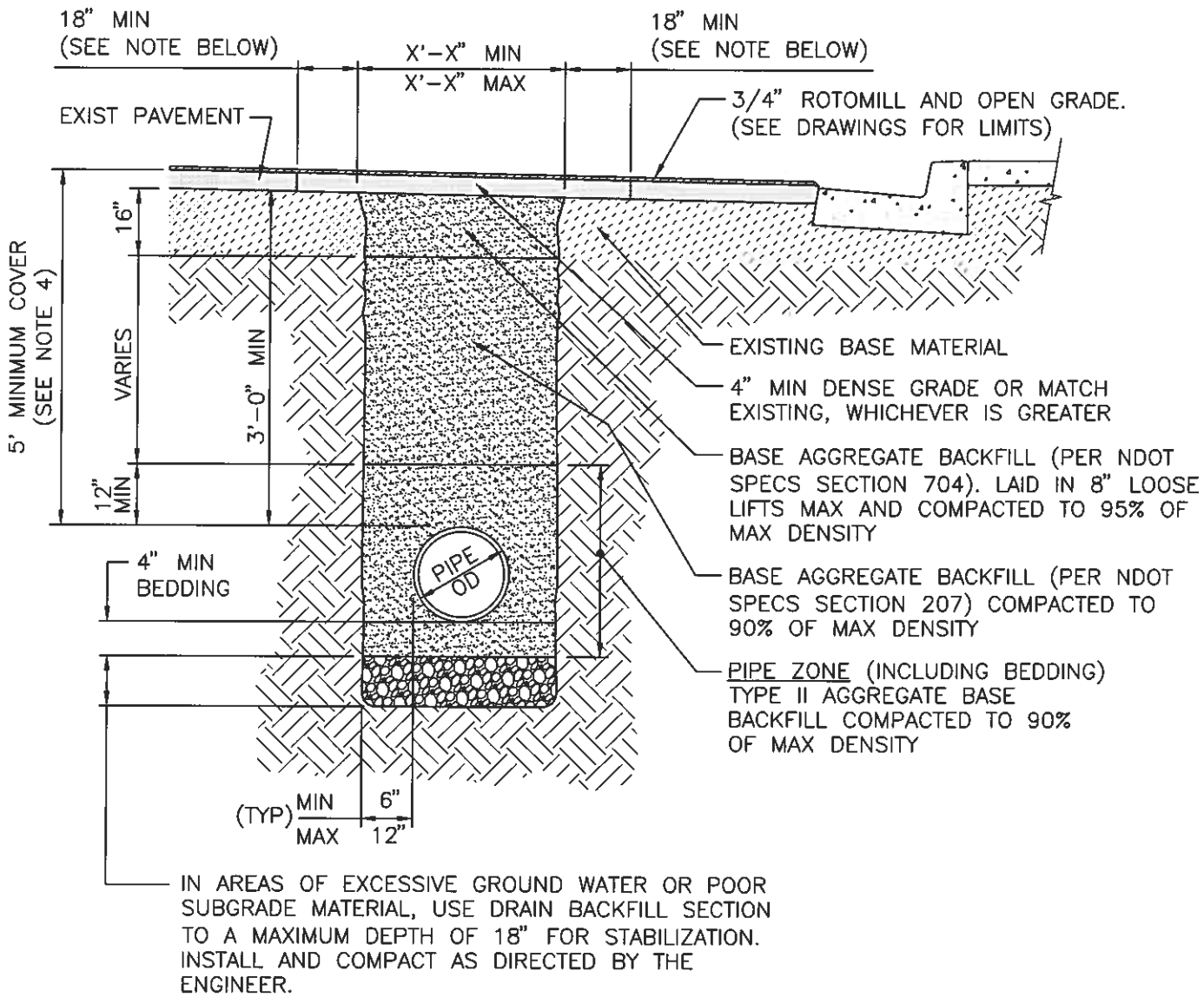

NOTE:
FINAL LIMITS OF PAVEMENT REPLACEMENT TO BE DETERMINED BY A NDOT INSPECTOR.

TRENCH BACKFILL - (NDOT R/W) PAVED AND UNPAVED AREAS

NOT TO SCALE PL02–3 070208

NOTES FOR PAVED AND UNPAVED AREAS

PL02-4 070208

1. REFERENCES:

   UNIFORM STANDARD SPECIFICATIONS FOR PUBLIC WORKS CONSTRUCTION OFF-SITE IMPROVEMENTS CLARK COUNTY AREA NEVADA, LATEST EDITION.

   INTERAGENCY QUALITY ASSURANCE COMMITTEE (IQAC)

2. SEE SPECS SEC 02300 FOR ACCEPTABLE METHODS OF COMPACTION.

3. TRENCH EXCAVATION: COMPLY WITH THE CURRENT REGULATIONS AS DETERMINED BY NEVADA OCCUPATIONAL SAFETY AND HEALTH ADMINISTRATION.

4. DURING CONSTRUCTION 24" MINIMUM COVER MUST BE MAINTAINED FROM TOP OF PIPE TO GRADE.

5. MINIMUM COVER IS REFERENCED TO FUTURE FINISHED FINAL GRADES UNLESS OTHERWISE SHOWN ON PROFILE DRAWINGS.

6. SUPPORT PIPE AND FIBER OPTIC CONDUITS (IF REQUIRED) WITH SANDBAGS AND SPOT LOAD AS REQUIRED DURING INSTALLATION OF CLSM IN PIPE ZONE AND PIPE BEDDING AREAS.

7. DIAGONAL PAVEMENT REPLACEMENT IS NOT PERMITTED.

8. FOG SEAL (SEAL COAT) ALL DENSE GRADE PAVEMENT REPLACEMENT SECTIONS.

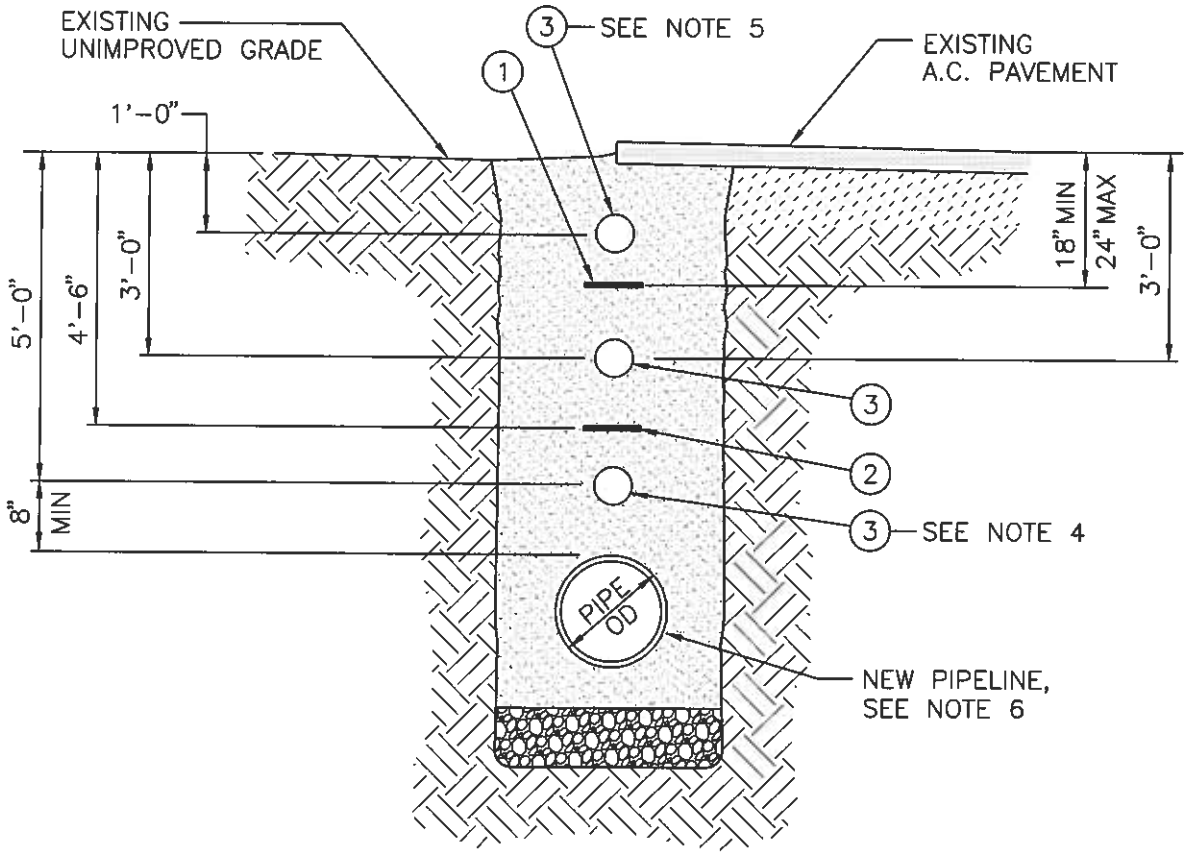

(1)	PIPE LOCATOR RIBBON – 3" WIDTH
(2)	PIPE LOCATOR RIBBON – 3" WIDTH (INSTALLED WHEN COVER OF NEW PIPELINE IS 7'–0" OR GREATER)
(3)	LOCATOR BALL – SEE NOTES

NOTES:

1. CENTER PIPE LOCATOR RIBBON IN TRENCH AND PLACE OVER ENTIRE LENGTH OF ALL TYPES, SIZES AND LOCATIONS OF WATER MAINS
2. LOCATOR BALLS REQUIRED AT ALL HORIZONTAL BENDS OR DEFLECTIONS, CASING ENDS, EVERY 400 FEET OF PIPELINE, OR WHERE REQUESTED BY ENGINEER.
3. IF A.C. PAVEMENT EXISTS INSTALL LOCATOR BALL AT 3'–0" (TYP).
4. IF A CUT TO FINISH GRADE IS ANTICIPATED INSTALL LOCATOR BALLS AT BOTH 3'–0" AND 5'–0" (TYP).
5. IF A FILL TO FINISH GRADE IS ANTICIPATED INSTALL LOCATOR BALLS AT BOTH 1'–0" AND 3'–0" (TYP).
6. RIBBON FOR RESTRAINED JOINTS/PIPE TO BE TAPED EVERY 20 FEET DIRECTLY TO TOP OF PIPE OR USE SELF–ADHERING RIBBON.

PIPE LOCATOR RIBBON AND LOCATOR BALL INSTALLATION

NOT TO SCALE PL02–6 110210

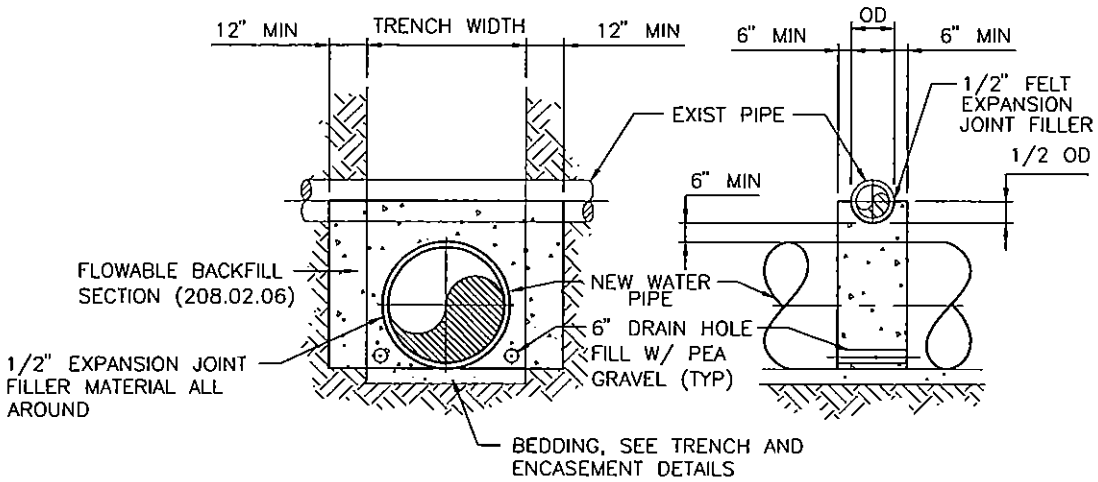

EXISTING PIPE OVER NEW WATER MAIN

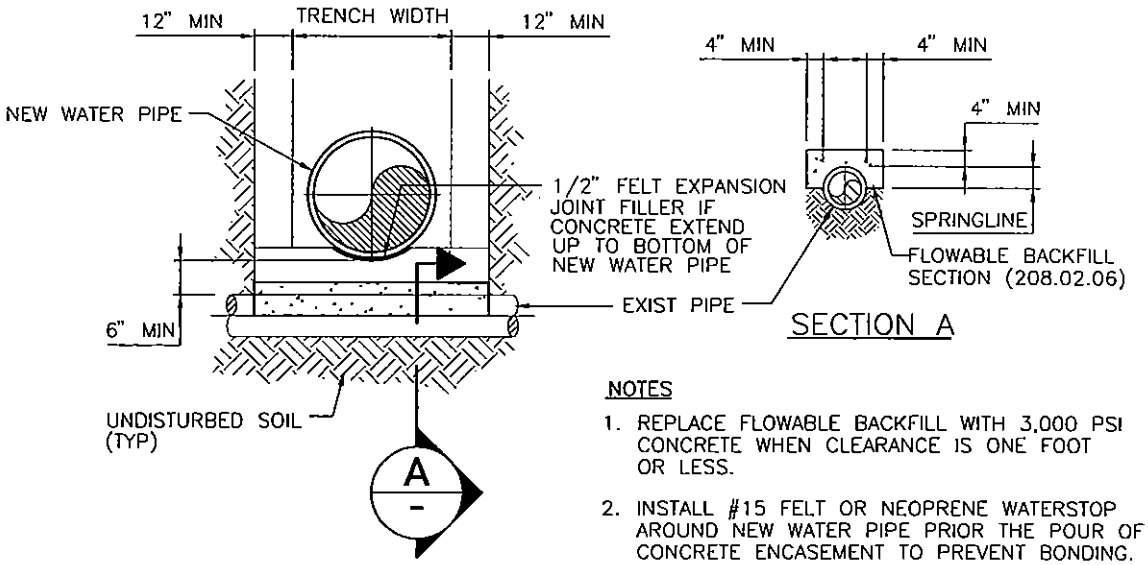

NOTES

1. REPLACE FLOWABLE BACKFILL WITH 3,000 PSI CONCRETE WHEN CLEARANCE IS ONE FOOT OR LESS.
2. INSTALL #15 FELT OR NEOPRENE WATERSTOP AROUND NEW WATER PIPE PRIOR THE POUR OF CONCRETE ENCASEMENT TO PREVENT BONDING.

EXISTING PIPE UNDER NEW WATER MAIN

STRUCTURAL SUPPORT AT CROSSINGS

NOT TO SCALE PL02-7 071003

DESIGNER NOTE:
ENGINEER TO VERIFY REBARS AND DIMENSIONS ARE ADAQUATE FOR THE PROJECT (TYP)

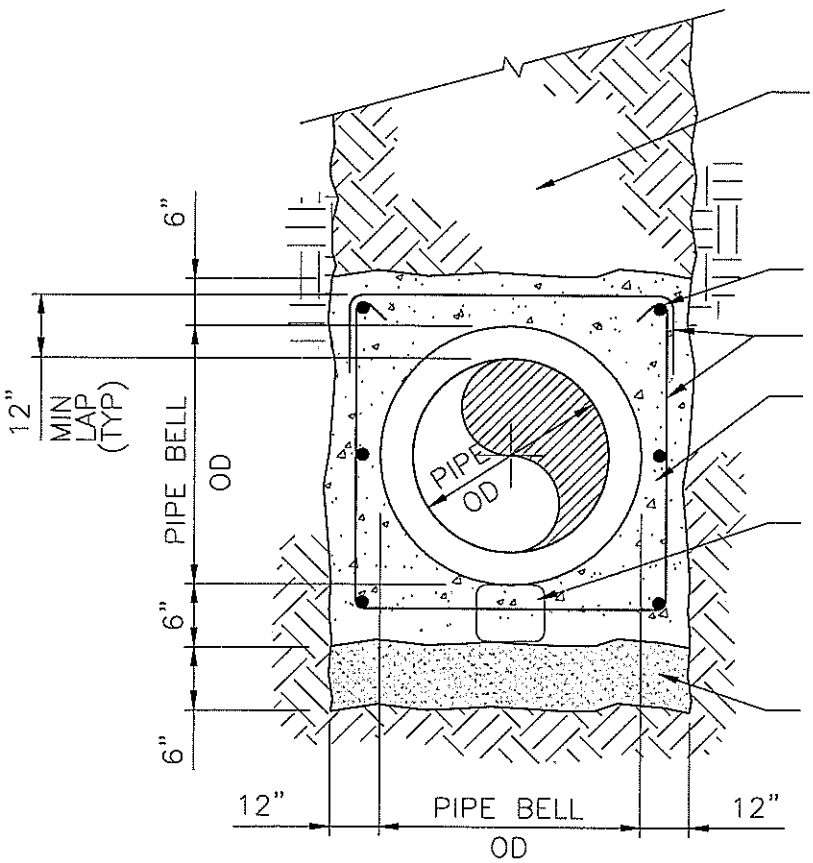

FOR TRENCH BACKFILL REQUIREMENTS, SEE X/XXXX (PL02)

6 – #4 CONTINUOUS

#4 TIES @ 24" OC

3000 PSI CONCRETE (CLASS D)

INSTALL PLASTIC WOVEN TYPE SANDBAGS FOR SUPPORT WITHIN 4' OF THE END OF EACH PIPE SECTION AND ALONG THE PIPE AT 20' (MAX) OC

TYPE II AGGREGATE BASE BACKFILL (208.02.04). COMPACT TO 90% OF MAX DENSITY

NOTE:
CONTROL JOINTS TO BE INSTALLED EVERY 40' (TYP)

SINGLE PIPE REINFORCED ENCASEMENT

NOT TO SCALE

PL02-8 072006

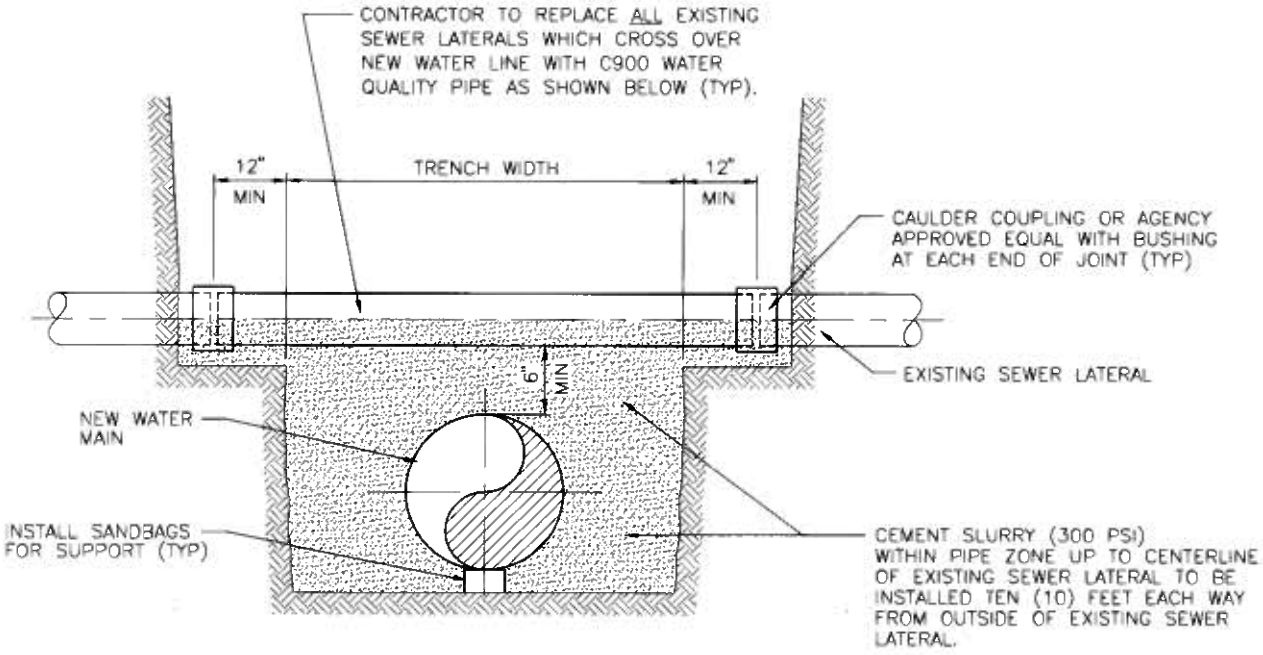

NOTES:

1. CONTRACTOR SHALL MAINTAIN CONTINUOUS SEWER SERVICE TO CUSTOMERS. SEWER LATERALS CUT/DAMAGED DURING CONSTRUCTION SHALL BE REPAIRED IMMEDIATELY BY THE CONTRACTOR AT HIS EXPENSE PER DESIGN AND CONSTRUCTION STANDARDS OF THE AGENCY HAVING JURISDICTION.
2. INSTALL SAND BACKFILL AROUND WATER SERVICE LATERALS PER (X / XXXX) (PL16-1 OR PL16-3) PRIOR TO INSTALLATION OF CEMENT SLURRY IN TRENCH.

EXISTING SEWER SERVICE LATERAL REPLACEMENT

NOT TO SCALE

PL02-9 102907

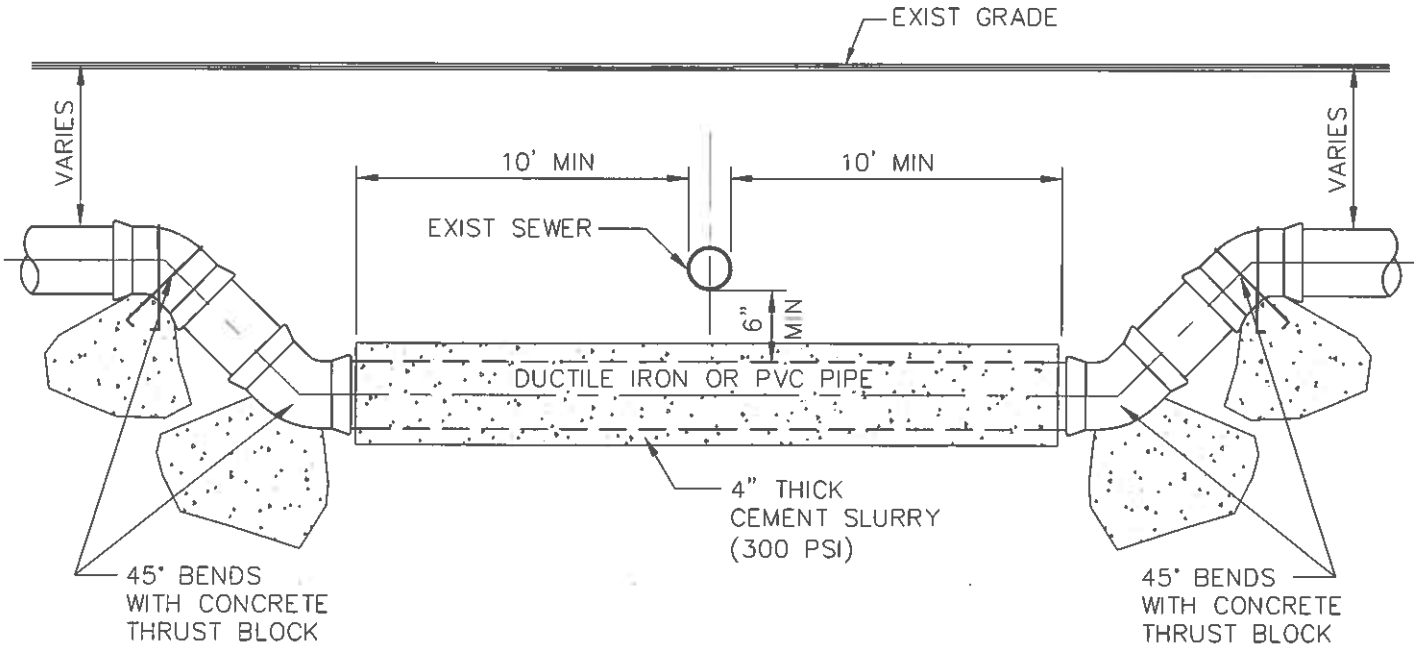

NOTE:

CEMENT SLURRY – A MIXTURE OF CEMENT, SAND AND WATER NECESSARY TO OBTAIN THE DESIRED 300 PSI. SAND MATERIAL PER SECTION 208 OF THE UNIFORM STANDARD SPECIFICATIONS.

SEWER/STORM DRAIN CROSSING ENCASEMENT

NOT TO SCALE

PL02-10 102907

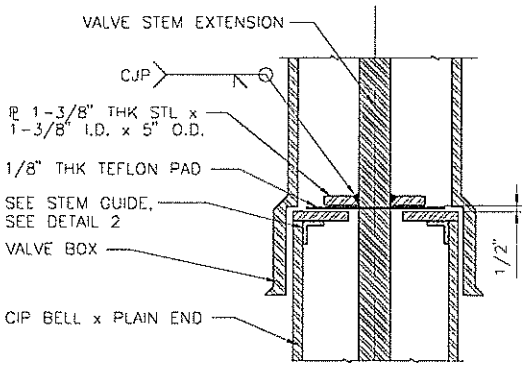

GUIDE PLATE – DETAIL 1

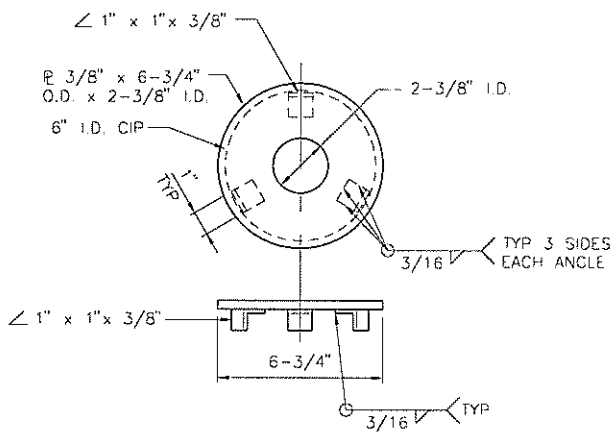

STEM GUIDE – DETAIL 2

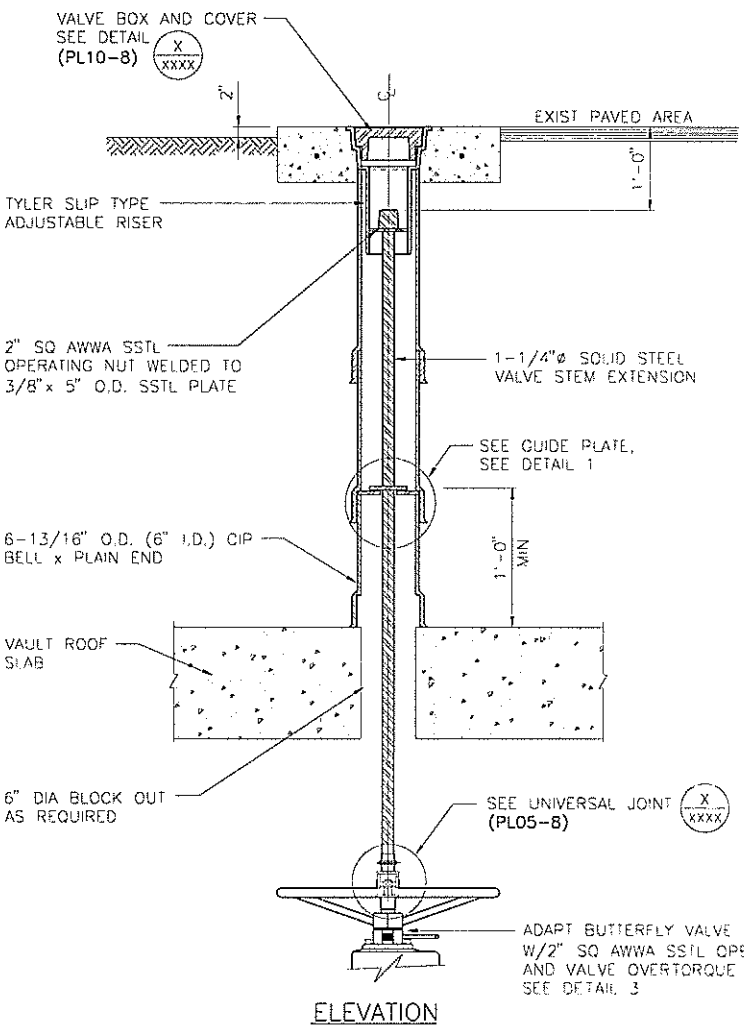

ELEVATION

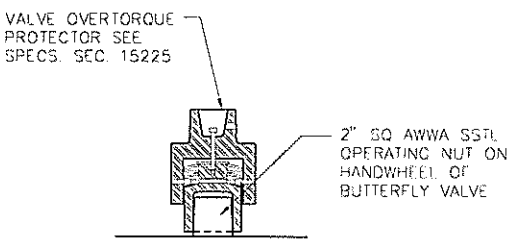

HANDWHEEL OPERATING NUT – DETAIL 3

VALVE BOX ON VAULT DETAIL

NOT TO SCALE PL05-7 062007

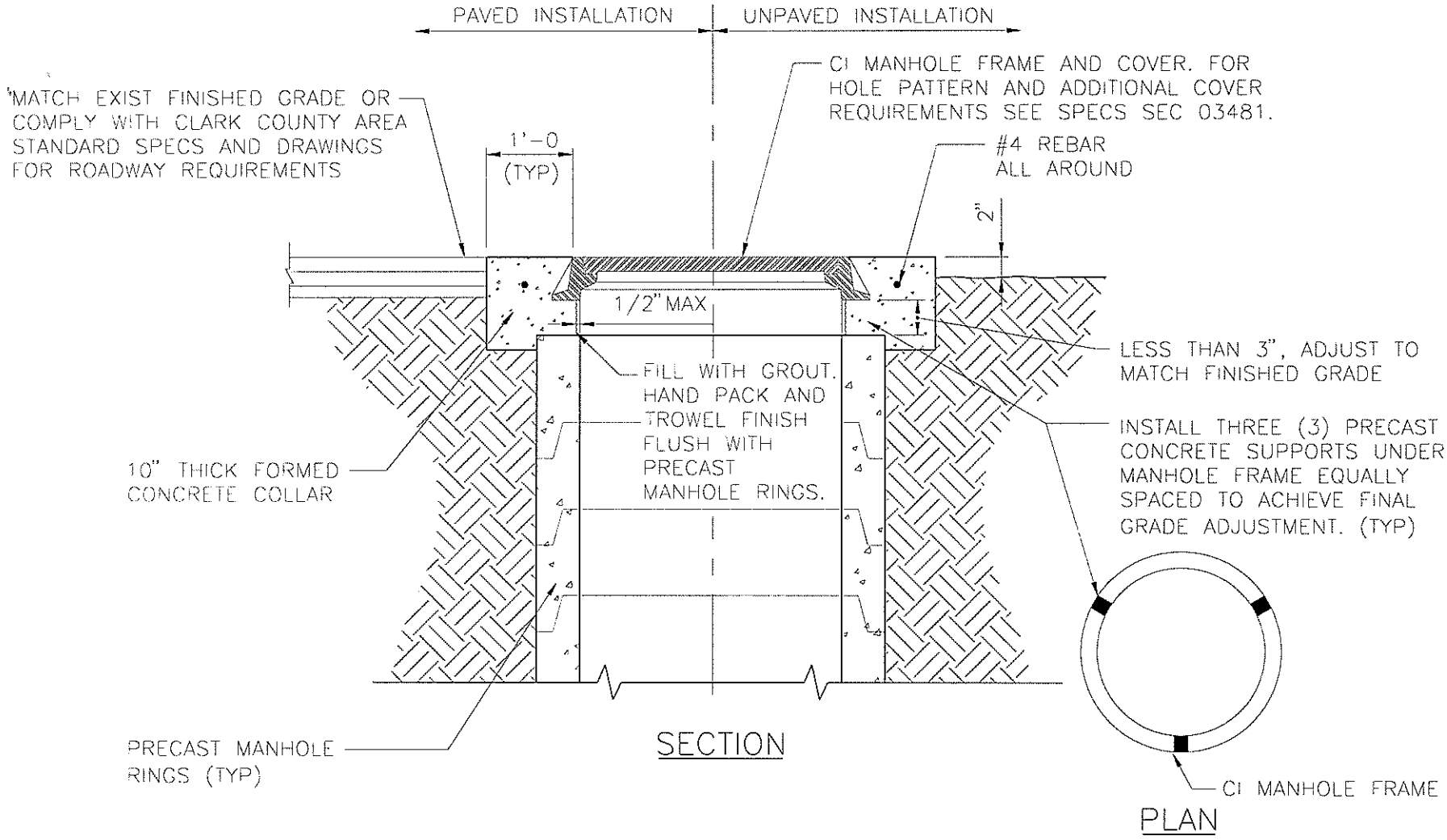

MANHOLE COVER AND COLLAR INSTALLATION

NOT TO SCALE PL08-4 062007

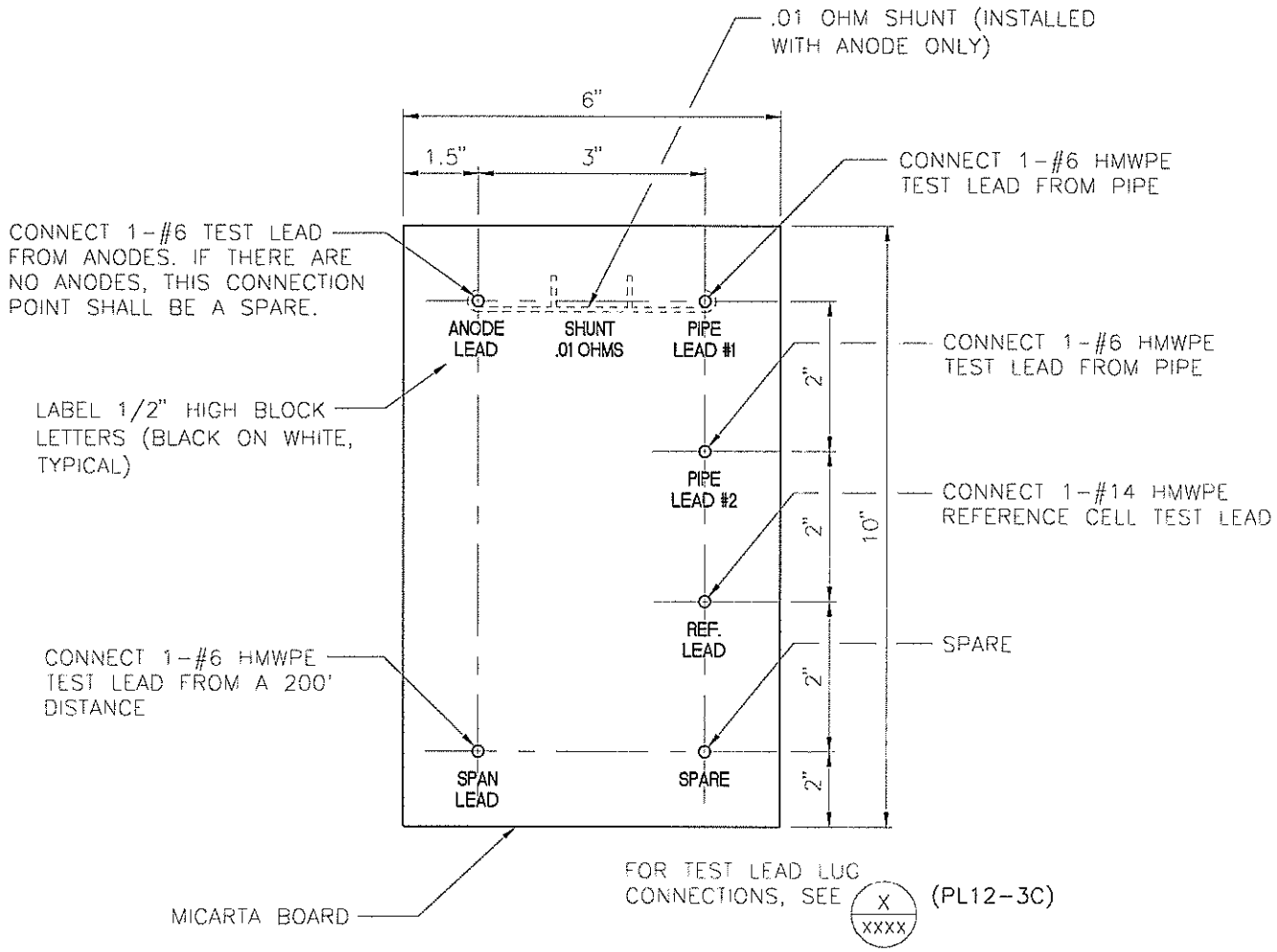

STANDARD TEST BOARD INSTALLATION

NOT TO SCALE PL12-3A 062007

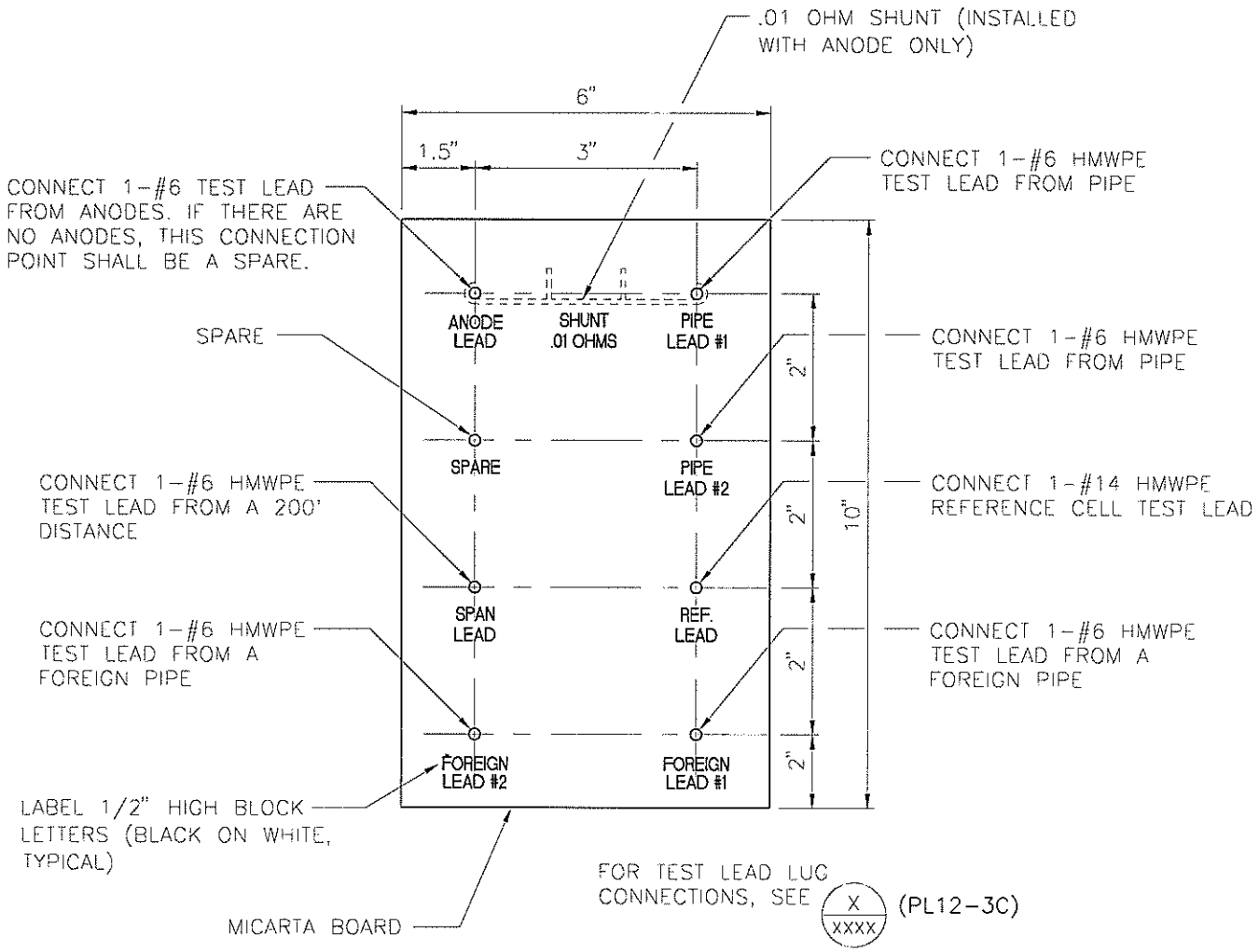

TEST BOARD FOR JOINT TEST STATION

NOT TO SCALE PL12-3B 062007

GENERAL NOTES

PL12-10 062007

1. ALL TEST LEADS AND ANODE LEADS SHALL BE ATTACHED TO THE STEEL CYLINDER OF THE PIPE BY MEANS OF A "CADWELD" EXOTHERMIC WELD.
2. ALL TEST LEADS AND ANODE LEADS SHALL BE ATTACHED TO EITHER THE PIPELINE'S BELL END, SPIGOT END OR PLAIN END AS SHOWN ON THE DRAWING.
3. ALL EXPOSED PORTIONS OF THE EXOTHERMIC WELD AND COPPER CABLE CONDUCTORS SHALL BE COATED WITH A SCOTCHCOAT 4 INSULATING RESIN PRIOR TO PLACING GROUT AROUND THE PIPELINE JOINT.
4. ALL TEST LEADS AND ANODE LEADS SHALL BE RUN WITHOUT SPLICES FROM THE CONNECTION AT THE PIPE TO THE CONNECTION AT THE TEST STATION BOX.
5. ALL TEST LEADS AND ANODE TEST LEADS INSIDE THE TEST BOX SHALL BE BUNDLED TOGETHER AT 8 INCH INTERVALS WITH NYLON CABLE TIES. ALL TEST STATION LEADS SHALL BE PROVIDED WITH SUFFICIENT SLACK SO THAT THE TEST BOARD MAY BE EXTENDED A MINIMUM OF 4 FEET ABOVE THE TEST BOX.
6. ALL TEST LEADS AND ANODE LEADS (WIRE INSULATION) ARE COLOR CODED AS FOLLOWS:

TEST STATION LEADS FROM PIPE	– WHITE
REFERENCE CELL TEST LEADS	– RED
ANODE TEST LEADS	– GREEN
200' TEST LEAD	– BLUE
FOREIGN PIPE LEAD	– YELLOW
CASING	– BLACK

   ALL TEST LEADS AND ANODE LEADS SHALL BE COLOR CODED WITH COLORED WIRE INSULATION. COLORED TAPING NOT PERMITTED (TYP).

7. ALL TEST LEADS AND ANODE LEADS SHALL BE CONNECTED TO THE BRASS BOLTS ON THE TEST BOARD WITH SOLDERLESS SCREW TIGHT COPPER LUG CONNECTORS OR PRESSURE TERMINAL CONNECTORS. ALL FASTENERS (SCREWS, LUGS) SHALL BE BRASS OR COPPER.
8. ALL TEST LEADS AND ANODE TEST LEADS SHALL HAVE A MINIMUM OF 4' OF SLACK NEAR THE PIPE JOINT TO PREVENT DAMAGE DURING THE BACKFILL OPERATION.
9. ALL TEST LEADS AND ANODE TEST LEADS SHALL BE PLACED ALONG THE SIDE AND BELOW THE SPRINGLINE OF THE PIPE.
10. DUAL TEST STATIONS – LABEL ALL WIRES TO DISTINGUISH.
11. CABLE ASSEMBLIES SHALL BE USED WHEN PRACTICAL.
12. TEST STATION PLACEMENT TO BE PERPENDICULAR TO PIPE. AT INTERSECTIONS TEST STATION WIRES TO BE PLACED PARALLEL TO PIPE FOR PLACEMENT PERPENDICULAR TO PIPE AFTER ROAD EASEMENT RADIUS.
13. PRE-PACKAGED ANODES SHALL HAVE 6" LIFT OF COMPACTED NATIVE BACKFILL. AFTER BACKFILL IS IN PLACE, SATURATE THE AREA WITH TEN (10) GALLONS MINIMUM OF WATER. AFTER ALL WATER HAS BEEN ABSORBED CONTINUE BACKFILLING.

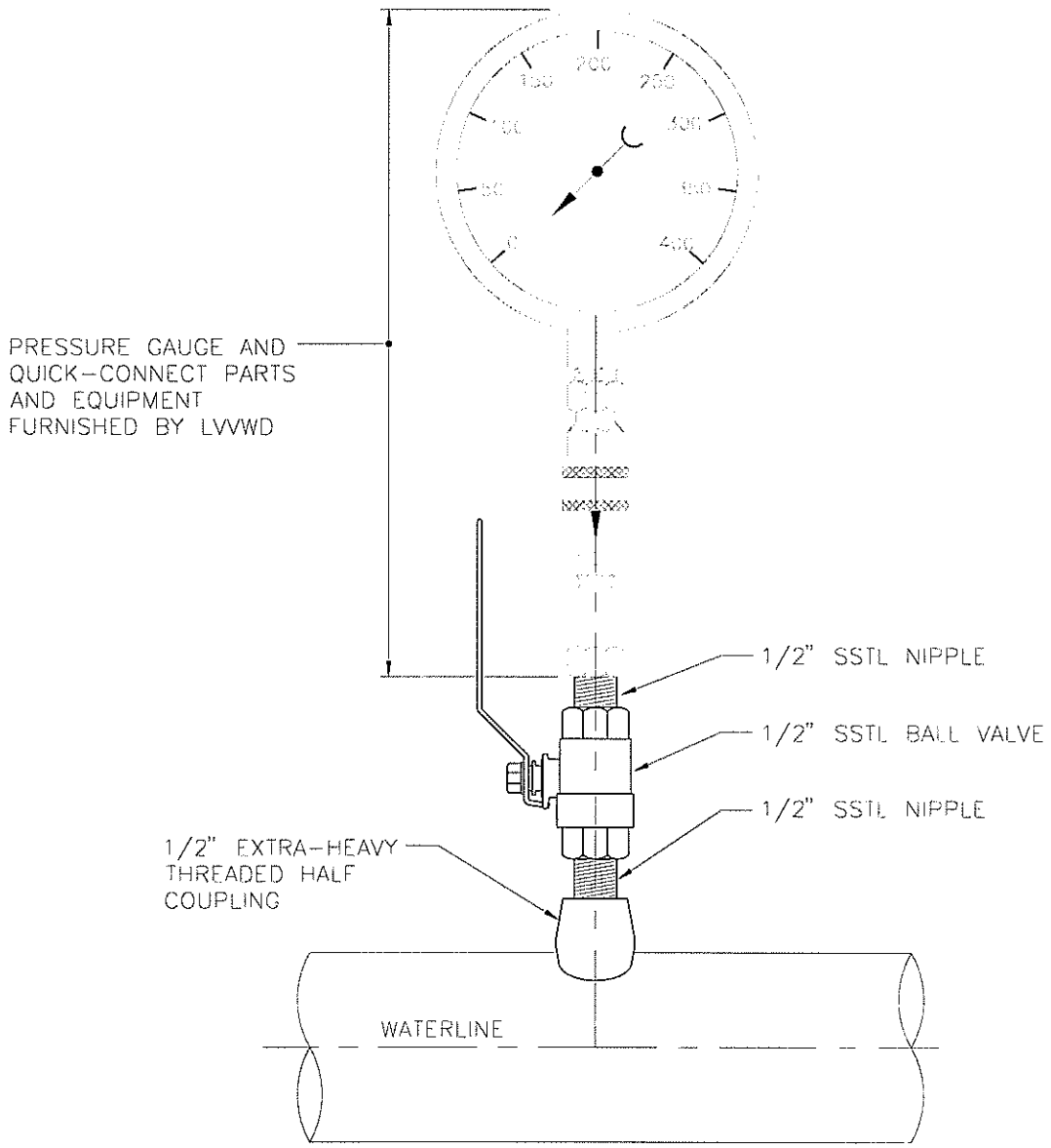

PRESSURE GAUGE CONNECTION DETAIL

NOT TO SCALE PL15-7 062007

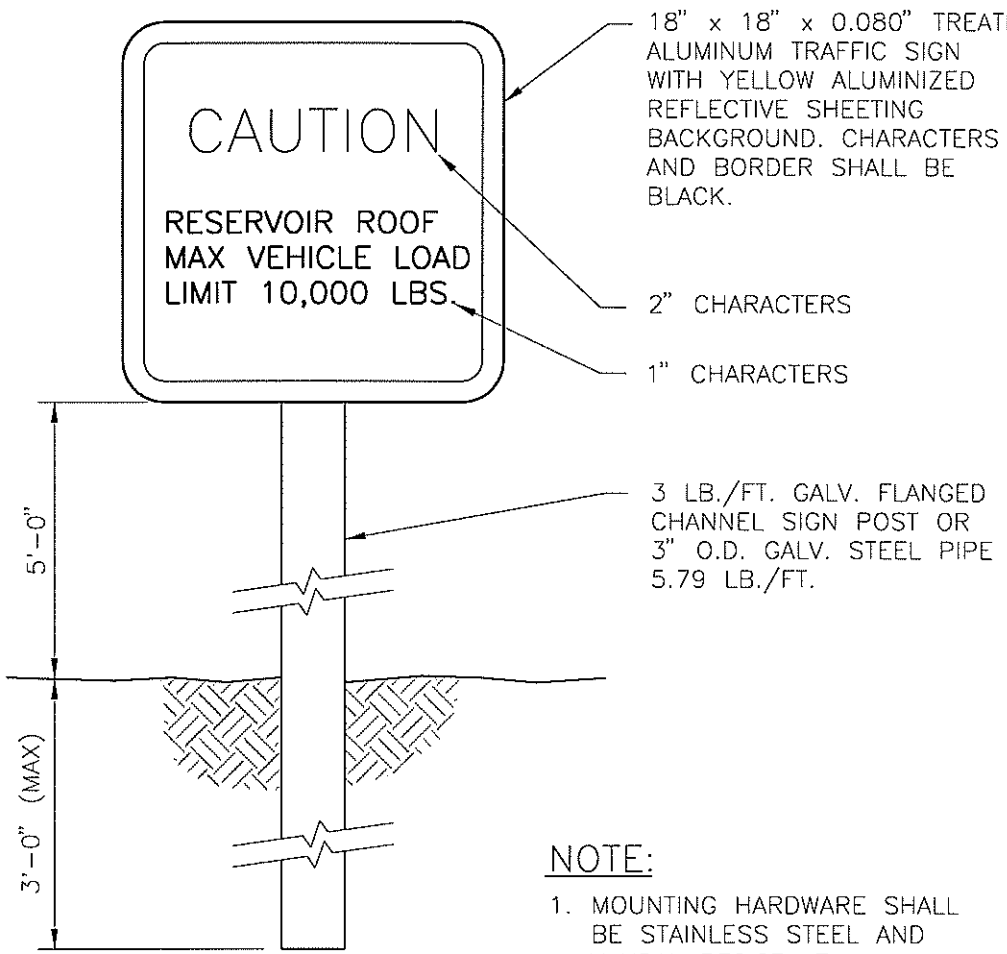

NOTE:

1. MOUNTING HARDWARE SHALL BE STAINLESS STEEL AND VANDAL RESISTANT.

ROOF LOADING SIGN

NOT TO SCALE RC03-2 042007

DESIGNER NOTES:

1. EACH VAULT SHOWN ON THE PIPELINE PLAN SHALL BE DETAILED WITH A STRUCTURAL PLAN, A MECHANICAL PIPING PLAN AND ALL OTHER REQUIRED SECTIONS AND DETAILS. THE VAULT PLANS SHALL INDICATE THE PIPE LINE STATION REFERENCED TO THE VAULT STATIONING POINT, THE VAULT ORIENTATION TO NORTH, THE LOCATION AND PLAN ORIENTATION OF ALL OF THE VAULT APPURTENANCES AND THE MANHOLE ACCESS COVER.
2. EACH VAULT PLAN, SECTIONS AND DETAILS SHALL INDICATE ALL LAYOUT DIMENSIONS AS DETERMINED BY THE DESIGN ENGINEER OR AS REFERENCED TO DIMENSIONS ON THE "VAULT DIMENSION TABLE" PL03-6 AND THE "PIPE LOCATION TABLE" PL03-5 IN THESE STANDARD DETAILS.

(DESIGNER NOTES TO BE DELETED FROM DRAWING)

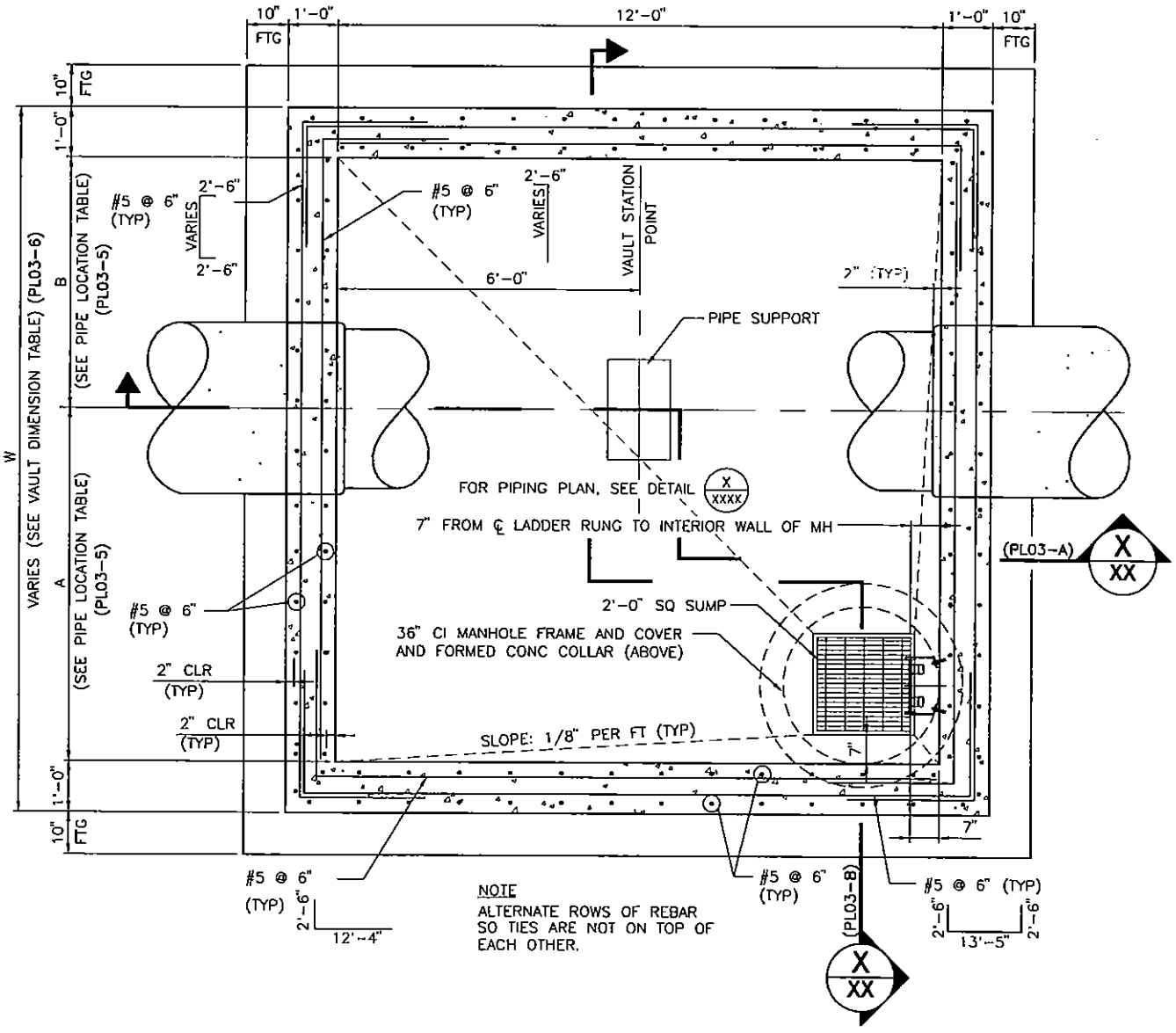

NOTE
ALTERNATE ROWS OF REBAR SO TIES ARE NOT ON TOP OF EACH OTHER.

SECTIONAL PLAN

NOT TO SCALE PL03-1 071003

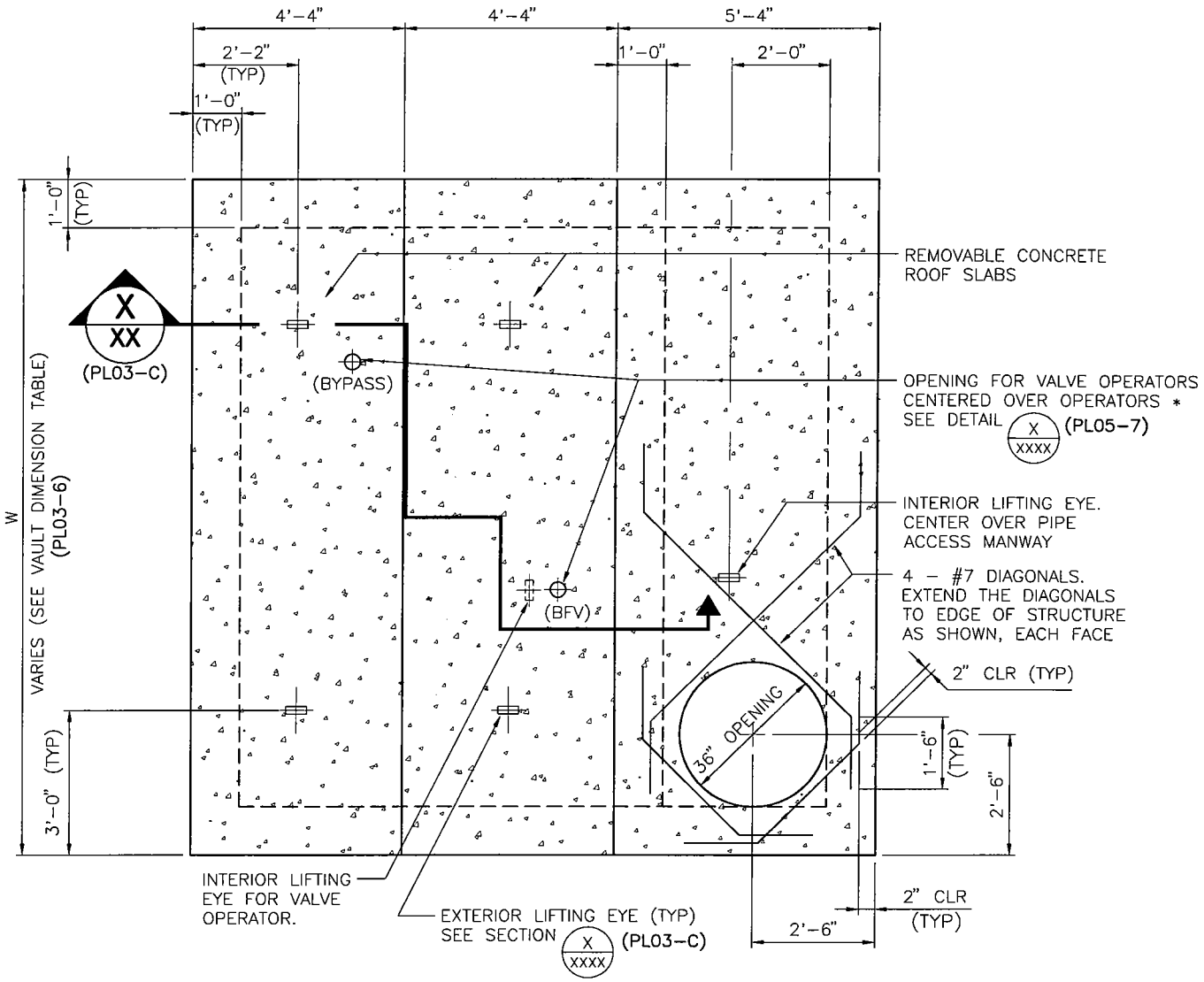

* NOTE:
ACTUAL LOCATION OF ROOF OPENING FOR VALVE BOX AND ACTUATOR EXTENSION SHALL BE DETERMINED BY CONTRACTOR, AS A FUNCTION OF THE DIMENSIONS AND CONFIGURATION OF THE ACTUAL EQUIPMENT USED ON THE PROJECT. CONTRACTOR SHALL SUBMIT SCALED SHOP DRAWING PRIOR TO POURING CONCRETE VAULT TOP SLAB.

ROOF PLAN

NOT TO SCALE PL03-2 032305

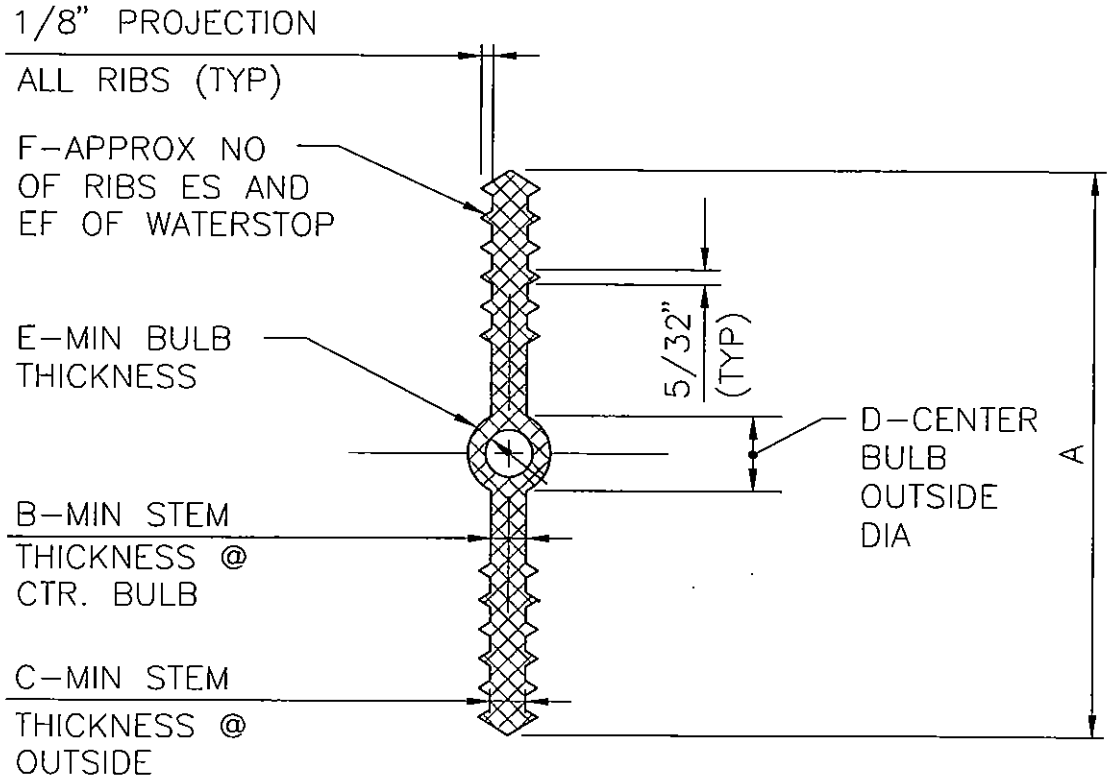

SIZE	A	B	C	D	E	F
6" x 3/8"	6"	3/8"	3/8"	7/8"	1/4"	6

NOTES

1. MATERIAL QUALITY PER SECTION 03300 OF SPECIFICATIONS.
2. DIMENSION REQUIREMENTS INDICATED SHOULD BE GIVEN TO SUPPLIERS PRIOR TO PLACING ORDERS.
3. NON-ROUND CENTER BULBS SHALL HAVE A MIN OUTSIDE DIMENSION OF "D".

WATERSTOP DETAIL

NOT TO SCALE PL03-3 071003

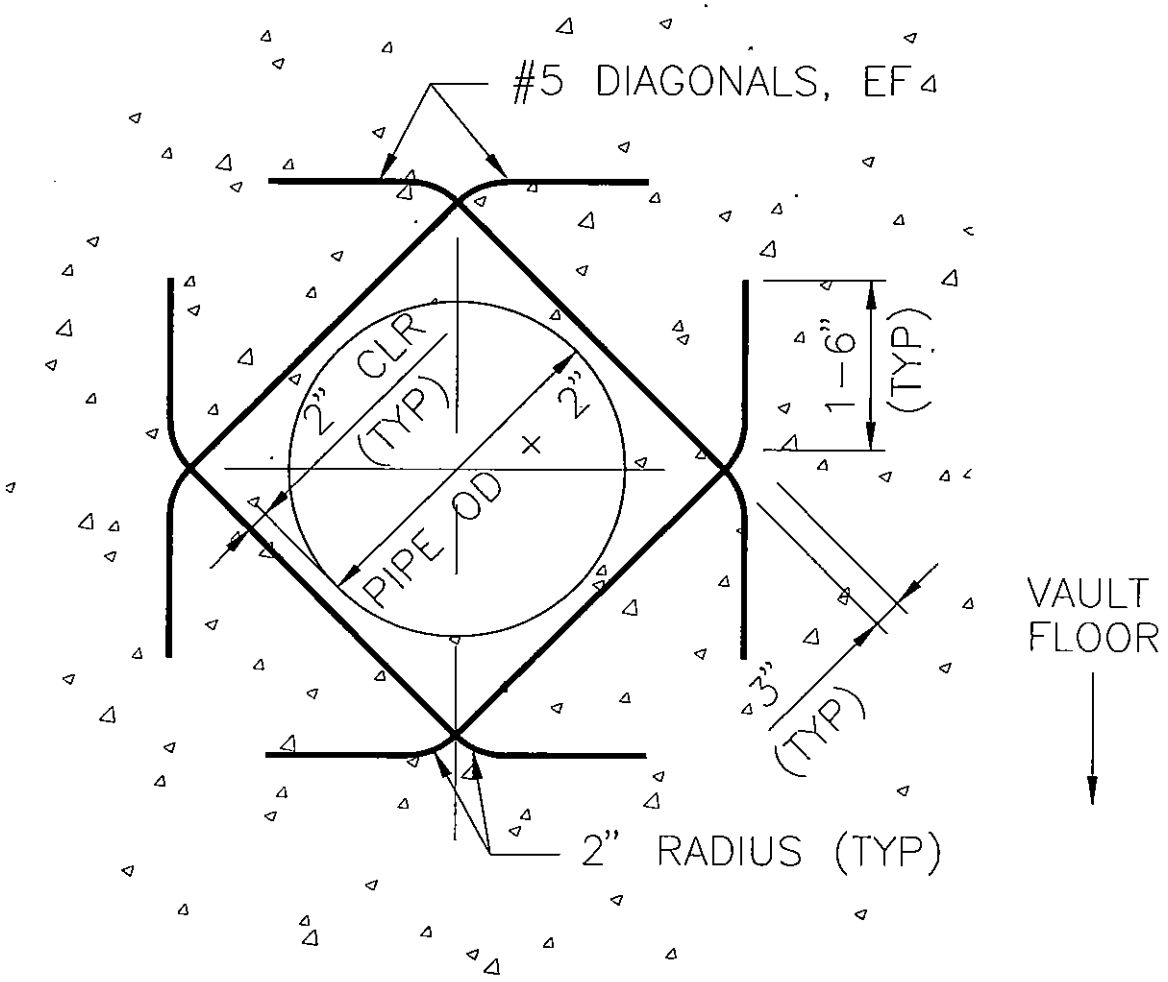

WALL OPENING - DIAGONAL REINFORCEMENT DETAIL

NOT TO SCALE PL03-4 071003

PIPE LOCATION TABLE

PL03-5 060101

PIPE ID	A	B	C
30"	7'-3"	4'-9"	4'-0"
36"	7'-0"	5'-0"	4'-3"
42"	7'-6"	5'-6"	4'-6"
48"	7'-6"	5'-6"	4'-9"
54"	7'-3"	5'-9"	5'-0"
60"	7'-9"	6'-3"	5'-3"
66"	7'-9"	6'-3"	5'-6"
72"	7'-6"	6'-6"	5'-9"

VAULT DIMENSION TABLE

PL03-6 033103

	PIPELINE SIZE		
	30" – 36"	42" – 54"	60" – 72"
H	9'-6"	10'-6"	11'-6"
W	14'-0"	15'-0"	16'-0"

DESIGNER NOTE:
ALL DIMENSIONS TO BE APPROVED AND STRUCTURALLY VERIFIED BY THE A NEVADA LICENSED ENGINEER (TYP)

PL03–7 060601

NOTES

1. CONCRETE FOR VAULT STRUCTURES SHALL BE 4000 PSI, UNLESS OTHERWISE SPECIFIED.

2. PIPE OUTLET SHALL BE SHAPED TO FIT THE SPECIFIED PIPE DIAMETER.

3. MAINTAIN A MIN CLEARANCE OF 2" OF COVER FOR REINFORCED STEEL, UNLESS OTHERWISE SPECIFIED.

4. BACKFILL ON TOP AND ALL SIDES OF VAULT STRUCTURE WITH TYPE II AGGREGATE BASE. PLACE AND COMPACT IN ACCORDANCE WITH THE STANDARD SPECIFICATIONS.

5. BACKFILL UNDER VAULT FLOOR SLAB WITH 12" OF TYPE II AGGREGATE BASE COMPACT TO 95% OF MAX DENSITY, UNLESS OTHERWISE SPECIFIED.

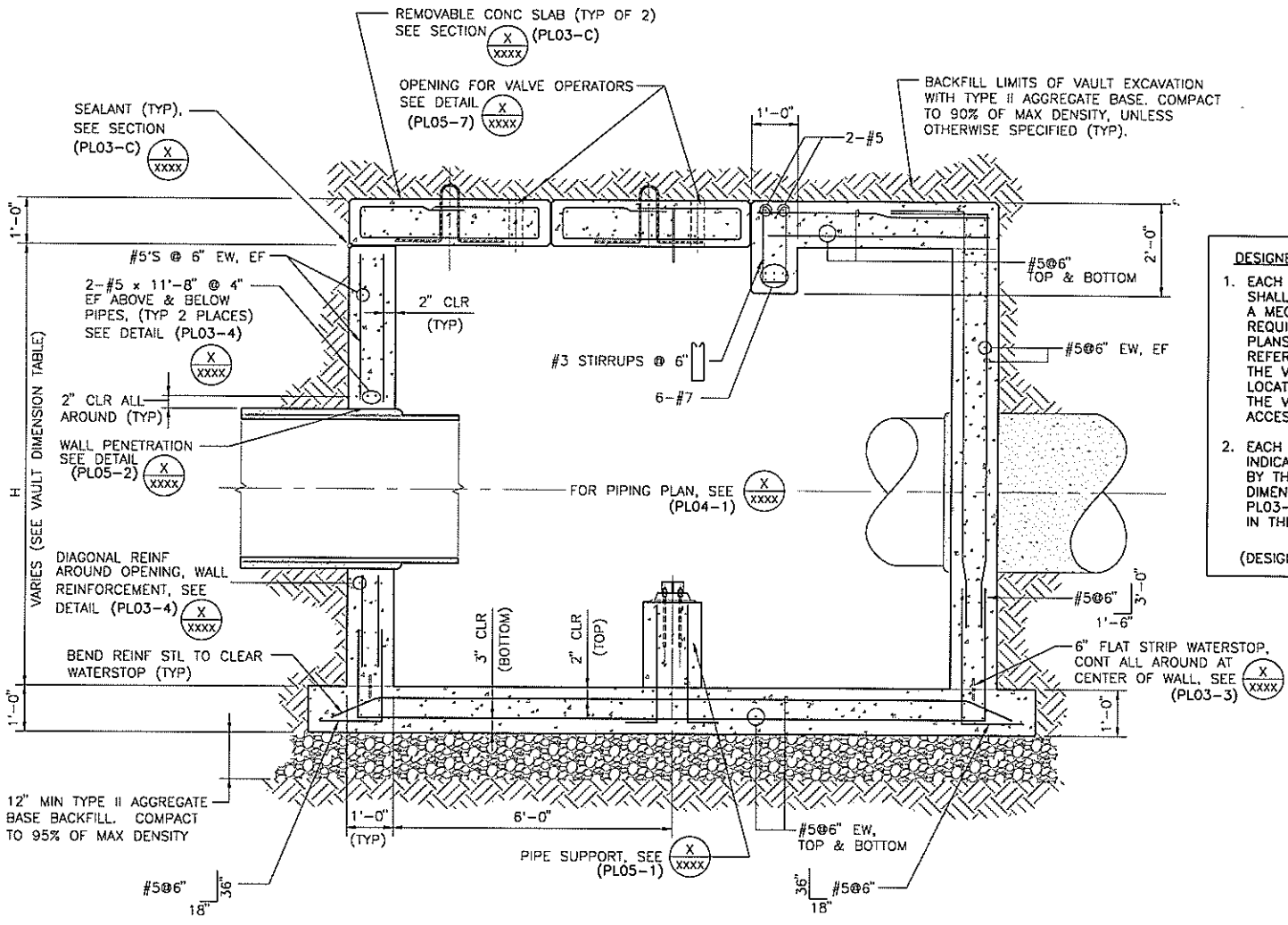

SECTION

SCALE: 1/2" = 1'-0" PL03-A 063006

DESIGNER NOTES:

1. EACH VAULT SHOWN ON THE PIPELINE PLAN SHALL BE DETAILED WITH A STRUCTURAL PLAN, A MECHANICAL PIPING PLAN AND ALL OTHER REQUIRED SECTIONS AND DETAILS. THE VAULT PLANS SHALL INDICATE THE PIPE LINE STATION REFERENCED TO THE VAULT STATIONING POINT, THE VAULT ORIENTATION TO NORTH, THE LOCATION AND PLAN ORIENTATION OF ALL OF THE VAULT APPURTENANCES AND THE MANHOLE ACCESS COVER.
2. EACH VAULT PLAN, SECTIONS AND DETAILS SHALL INDICATE ALL LAYOUT DIMENSIONS AS DETERMINED BY THE DESIGN ENGINEER OR AS REFERENCED TO DIMENSIONS ON THE "VAULT DIMENSION TABLE" PL03-6 AND THE "PIPE LOCATION TABLE" PL03-5 IN THESE STANDARD DETAILS.

(DESIGNER NOTES TO BE DELETED FROM DRAWING)

DESIGNER NOTES:

1. EACH VAULT SHOWN ON THE PIPELINE PLAN SHALL BE DETAILED WITH A STRUCTURAL PLAN, A MECHANICAL PIPING PLAN AND ALL OTHER REQUIRED SECTIONS AND DETAILS. THE VAULT PLANS SHALL INDICATE THE PIPE LINE STATION REFERENCED TO THE VAULT STATIONING POINT, THE VAULT ORIENTATION TO NORTH, THE LOCATION AND PLAN ORIENTATION OF ALL OF THE VAULT APPURTENANCES AND THE MANHOLE ACCESS COVER.

2. EACH VAULT PLAN, SECTIONS AND DETAILS SHALL INDICATE ALL LAYOUT DIMENSIONS AS DETERMINED BY THE DESIGN ENGINEER OR AS REFERENCED TO DIMENSIONS ON THE "VAULT DIMENSION TABLE" PL03-6 AND THE "PIPE LOCATION TABLE" PL03-5 IN THESE STANDARD DETAILS.

(DESIGNER NOTES TO BE DELETED FROM DRAWING)

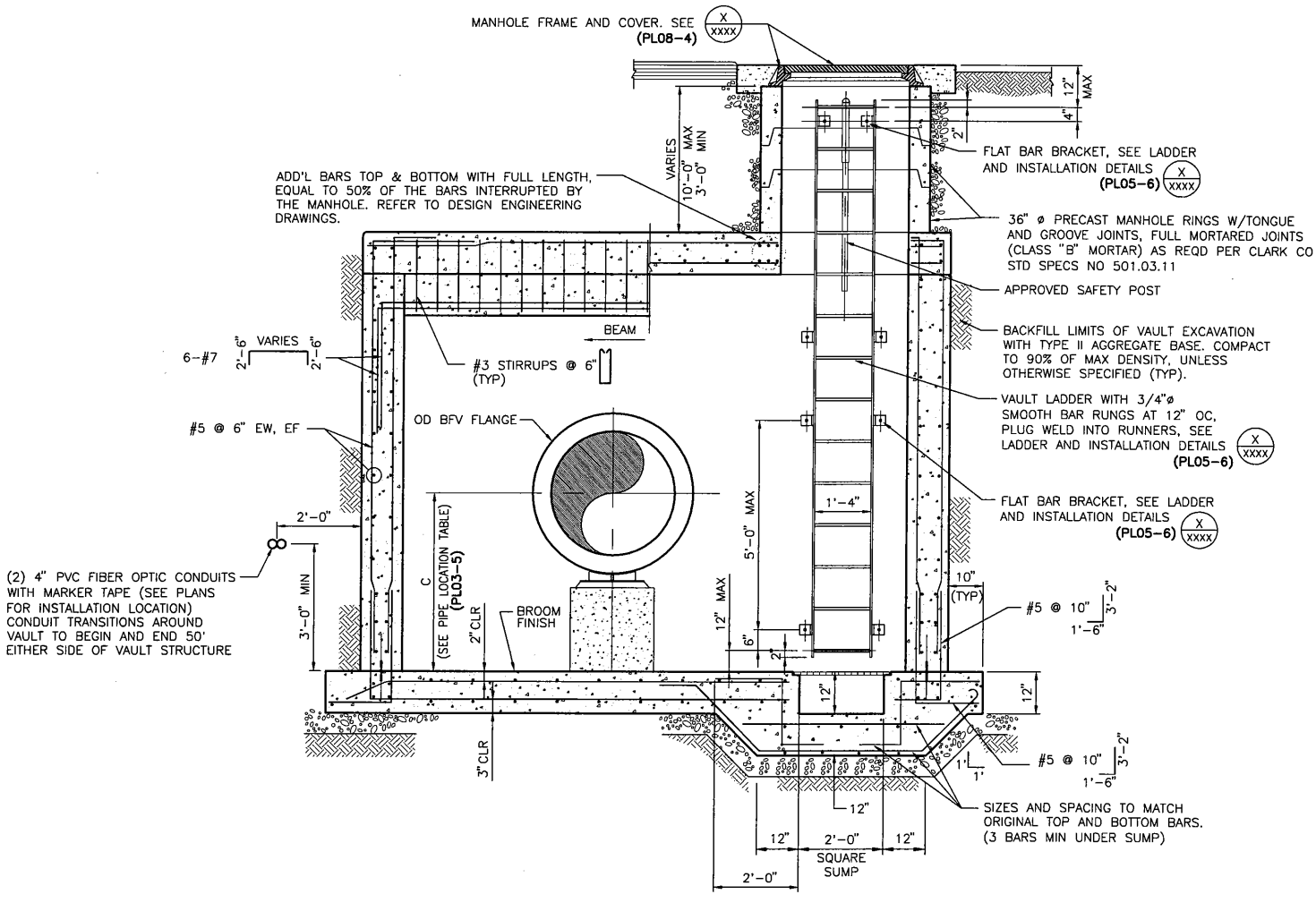

SECTION

SCALE: 1/2" = 1'-0" PL03-B 122603

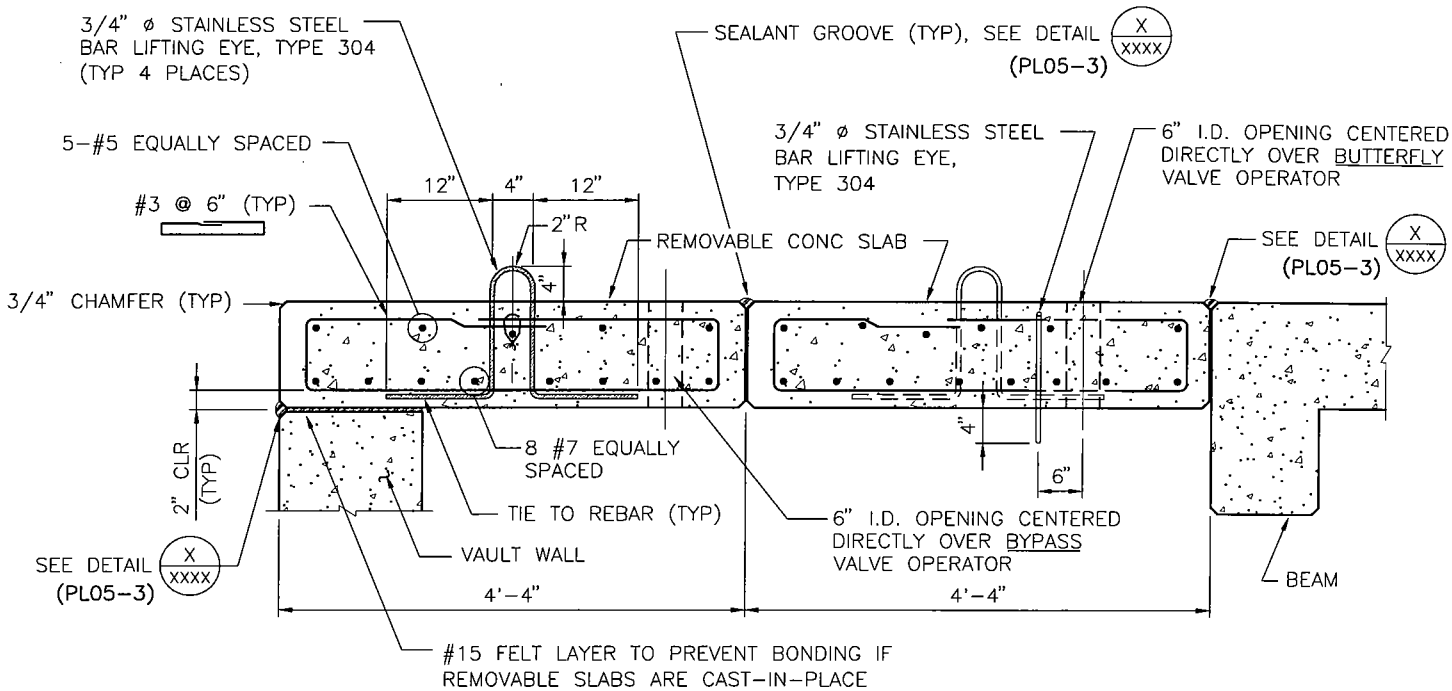

DESIGNER NOTE:
ALL DIMENSIONS AND STEEL REINFORCING ARE TO BE STRUCTURALLY VERIFIED BY A NEVADA LICENSED ENGINEER. ANY DEVIATIONS ARE REQUIRED TO HAVE PRIOR APPROVAL FROM DISTRICT AND MUST BE SUPPORTED BY DESIGN CALCULATIONS SUBMITTED (TYP).

REMOVABLE CONCRETE SLAB SECTION

NOT TO SCALE PL03-C 032305

DESIGNER NOTES:

1. EACH VAULT SHOWN ON THE PIPELINE PLAN SHALL BE DETAILED WITH A STRUCTURAL PLAN, A MECHANICAL PIPING PLAN AND ALL OTHER REQUIRED SECTIONS AND DETAILS. THE VAULT PLANS SHALL INDICATE THE PIPELINE STATION REFERENCED TO THE VAULT STATIONING POINT, THE VAULT ORIENTATION TO NORTH, THE LOCATION AND PLAN ORIENTATION OF ALL OF THE VAULT APPURTENANCES AND THE MANHOLE ACCESS COVER.
2. EACH VAULT PLAN, SECTIONS AND DETAILS SHALL INDICATE ALL LAYOUT DIMENSIONS AS DETERMINED BY THE DESIGN ENGINEER OR AS REFERENCED TO DIMENSIONS ON THE "VAULT DIMENSION TABLE" PL03-6 AND THE "PIPE LOCATION TABLE" PL03-5 IN THESE STANDARD DETAILS.

(DESIGNER NOTES TO BE DELETED FROM DRAWING)

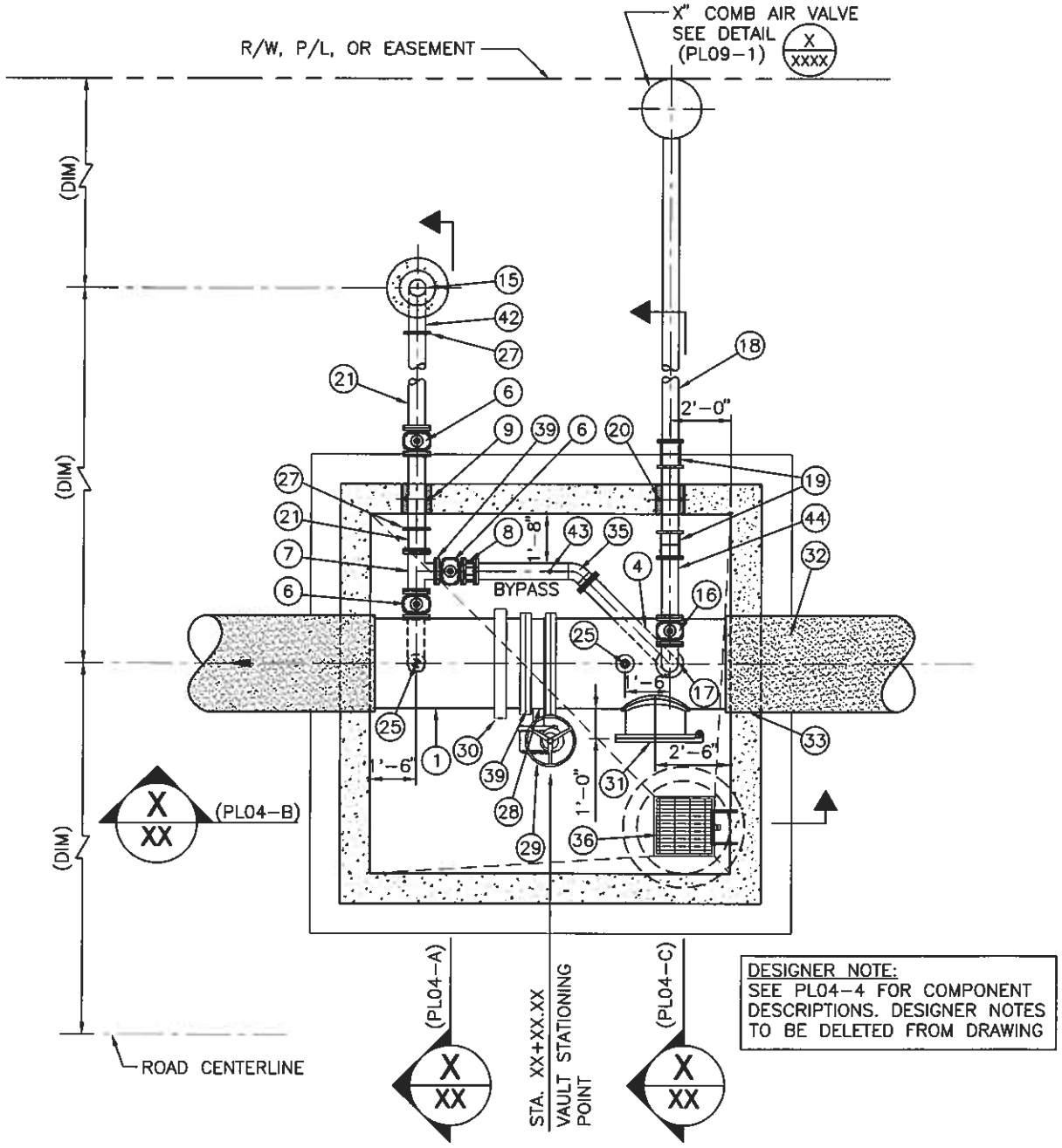

DESIGNER NOTE:
SEE PL04-4 FOR COMPONENT DESCRIPTIONS. DESIGNER NOTES TO BE DELETED FROM DRAWING

STA. XX+XX.XX
PIPING PLAN - MECHANICAL COUPLING

SCALE: 1/4" = 1'-0" PL04-1 070208

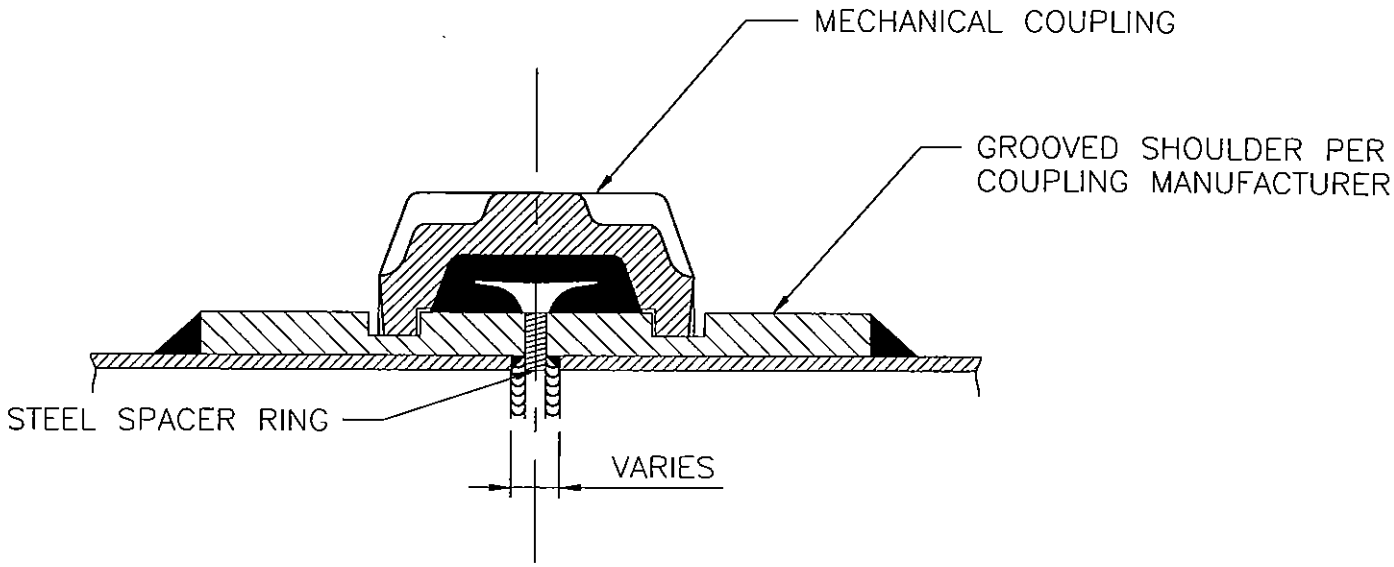

NOTE:
THICKNESS OF SPACER RING TO BE EQUAL TO MAXIMUM ALLOWABLE PIPE AND SEPARATION PER COUPLING MANUFACTURER.

MECHANICAL COUPLING WITH SPACER

NOT TO SCALE PL04-2 070803

PL04-4 070208

COMPONENT DESCRIPTIONS – MECHANICAL COUPLING

ITEM	DESCRIPTION	
1	ML STL PIPE, SEE SPECS SEC 02511	
2	6" ML STL OUTLET AND COLLAR PLATE	
3	10" THK FORMED CONCRETE COLLAR	
4	6" – 90° ML STL ELBOW W/WELDED SHORT PIECE W/FLANGE	
5	6" SCH 40 MLC STL PIPE – FLANGED x GROOVED END	
6	6" FLANGED GATE VALVE NRS (2" SQUARE OPERATING NUT OUTSIDE VAULT OR HAND WHEEL INSIDE VAULT) SEE SPECS SEC 15111. BYPASS VALVE INSIDE VAULT SHALL HAVE 1-1/4"ø VALVE OPERATOR STEM EXTENSION W/UNIVERSAL JOINT THROUGH ROOF TO STREET, SEE DETAIL [ ] ON DWG [ ]	(PL05-7)
7	6" ML STL FLANGED TEE	
8	6" DISMANTLING JOINT – SEE SPECS SEC 15225	
9	6" SCH 40 FABR STL MLC WALL SPOOL – GROOVED x FLANGED ENDS W/WALL FLANGE.	
10	1-1/4"ø VALVE OPERATOR STEM EXTENSION W/UNIVERSAL JOINT THROUGH ROOF TO STREET, SEE DETAIL [ ] ON DWG [ ]	(PL05-7)
11	8" SCH 30 MLC STL BUMPED HEAD	
12	2" SQ OPERATING NUT	
13	ENCASE BUMPED HEAD IN CONCRETE 4" MIN ALL AROUND	
14	8" SCH 30 MLC STL PIPE	
15	BLOW-OFF COVER ASSEMBLY, SEE DETAIL [ ] ON DWG [ ]	(PL09-2)
16	6" FLANGED GATE VALVE, SEE SPECS SEC 15111	
17	6" – 90° WELDED FLANGED ML STL ELBOW	
18	6" DIP PC350 OR 6" PVC CL150 DR18 PIPE	
19	6" SLEEVE TYPE COUPLING – SEE SPECS SEC 15225	
20	6" SCH 40 FABRICATED STL MLC WALL SPOOL – PLAIN ENDS W/WALL FLG	
21	6" SCH 40 MLC STL PIPE – FLANGED x GROOVED	
22	GALVANIZED CARBON STEEL LADDER, SEE DETAIL [ ] ON DWG [ ]	
23	6" FLANGED ML STL OUTLET	
24	VALVE BOX AND CONCRETE COLLAR. SEE DETAIL [ ] ON DWG [ ]	(PL10-8)
25	CORP STOP, SEE DETAIL [ ] ON DWG [ ]	(PL05-5)
26	VAULT WALL	
27	6" MECHANICAL COUPLING – SEE SPECS SEC 15225	
28	BUTTERFLY VALVE – SEE SPECS SEC 15112	
29	BUTTERFLY VALVE OPERATOR – SEE SPECS SEC 15112	
30	MECHANICAL TYPE COUPLING – SEE SPECS SEC 15225	
31	24" ACCESS MANWAY, SEE VAULT ACCESS MANWAY DETAIL [ ] ON DWG [ ]	(PL08-3)
32	MLC STL PIPE, SEE SPECS SEC 02511	
33	WALL PENETRATION, SEE DETAIL [ ] ON DWG [ ]	(PL05-2)
34	36"ø C.I. MANHOLE FRAME, SEE SECTION [ ] ON DWG [ ]	(PL03-B)
35	6" SCH 40 ML STL PIPE – FLANGED x PLAIN END AND WELDED WITH FLANGED x PLAIN END 45° BEND. BYPASS LINE TO BLOW-OFF ASSEMBLY	
36	2' SQ. SUMP, SEE SECTION [ ] ON DWG [ ]	(PL03-B)
37	CONCRETE FOOTING, SEE SECTION [ ] ON DWG [ ]	(PL03-B)
38	PIPE SUPPORT, SEE DETAIL [ ] ON DWG [ ]	(PL05-1)
39	INSULATING FLANGE, SEE DETAIL [ ] ON DWG [ ]	(PL05-4)
40	VALVE BOX ON VAULT, SEE DETAIL [ ] ON DWG [ ]	(PL05-7)
41	36"ø PRECAST MANHOLE RINGS, SEE SECTION [ ] ON DWG [ ]	(PL03-B)
42	6" SCH 40 MLC STL PIPE – GROOVED x PLAIN END WELDED TO 8" STL PIPE	
43	ADJUSTABLE PIPE SUPPORT, SEE SPECS SEC 15225	
44	6" SCH 40 ML STL PIPE – FLANGED x PLAIN END	

DESIGNER NOTES:

1. EACH VAULT SHOWN ON THE PIPELINE PLAN SHALL BE DETAILED WITH A STRUCTURAL PLAN, A MECHANICAL PIPING PLAN AND ALL OTHER REQUIRED SECTIONS AND DETAILS. THE VAULT PLANS SHALL INDICATE THE PIPELINE STATION REFERENCED TO THE VAULT STATIONING POINT, THE VAULT ORIENTATION TO NORTH, THE LOCATION AND PLAN ORIENTATION OF ALL OF THE VAULT APPURTENANCES AND THE MANHOLE ACCESS COVER.
2. EACH VAULT PLAN, SECTIONS AND DETAILS SHALL INDICATE ALL LAYOUT DIMENSIONS AS DETERMINED BY THE DESIGN ENGINEER OR AS REFERENCED TO DIMENSIONS ON THE "VAULT DIMENSION TABLE" PL03-6 AND THE "PIPE LOCATION TABLE" PL03-5 IN THESE STANDARD DETAILS.

(DESIGNER NOTES TO BE DELETED FROM DRAWING)

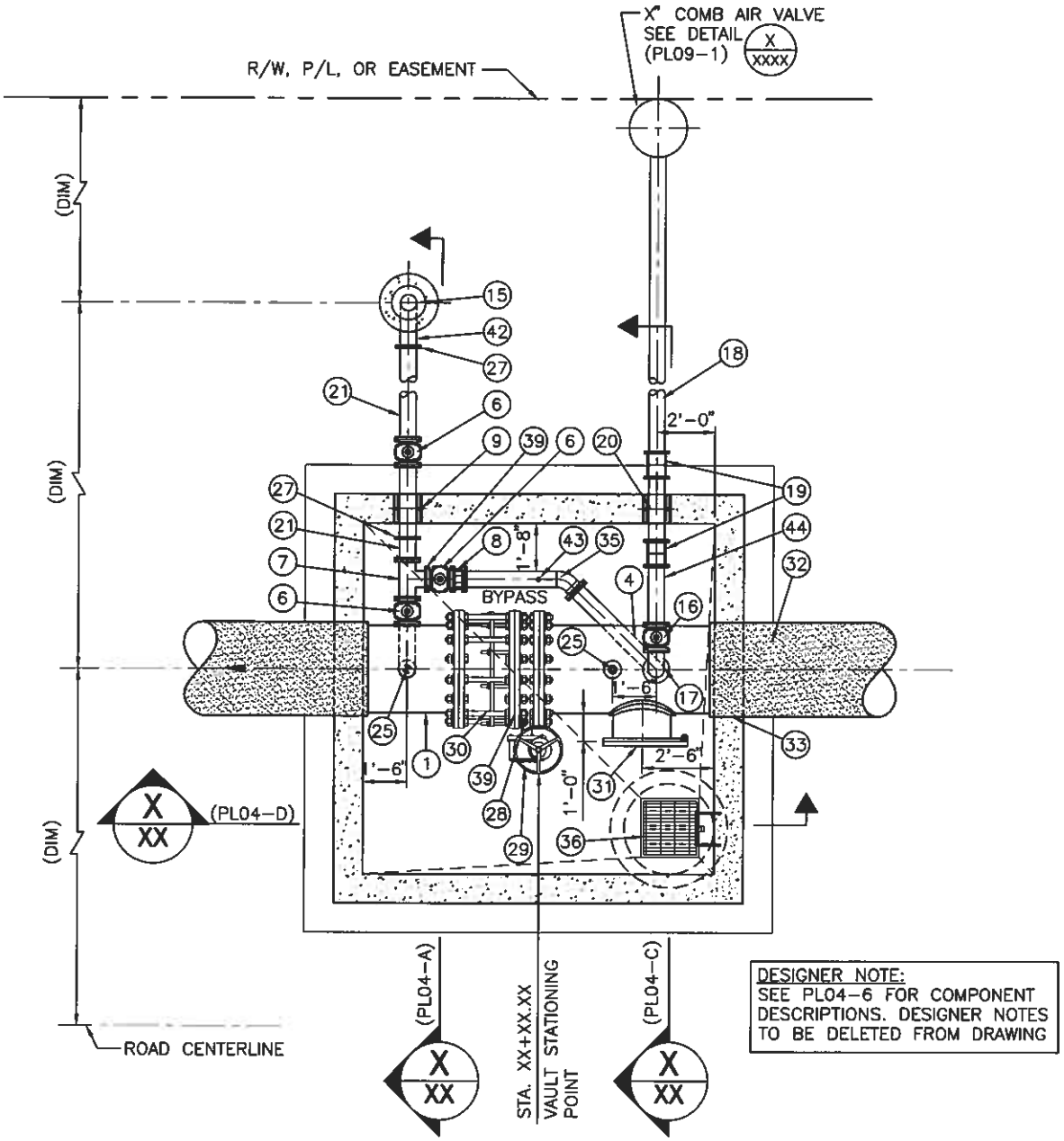

DESIGNER NOTE:
SEE PL04-6 FOR COMPONENT DESCRIPTIONS. DESIGNER NOTES TO BE DELETED FROM DRAWING

STA. XX+XX.XX
PIPING PLAN - DISMANTLING JOINT

SCALE: 1/4" = 1'-0" PL04-5 070208

PL04-6 070208

COMPONENT DESCRIPTIONS – DISMANTLING JOINT

ITEM	DESCRIPTION	
1	ML STL PIPE, SEE SPECS SEC 02511	
2	6" ML STL OUTLET AND COLLAR PLATE	
3	10" THK FORMED CONCRETE COLLAR	
4	6" – 90° ML STL ELBOW W/WELDED SHORT PIECE W/FLANGE	
5	6" SCH 40 MLC STL PIPE FLANGED x GROOVED ENDS	
6	6" FLANGED GATE VALVE NRS (2" SQUARE OPERATING NUT OUTSIDE VAULT OR HAND WHEEL INSIDE VAULT) SEE SPECS SEC 15111. BYPASS VALVE INSIDE VAULT SHALL HAVE 1-1/4"ø VALVE OPERATOR STEM EXTENSION W/UNIVERSAL JOINT THROUGH ROOF TO STREET, SEE DETAIL [ ] ON DWG [ ]	(PL05-7)
7	6" ML STL FLANGED TEE	
8	6" DISMANTLING JOINT – SEE SPECS SEC 15225	
9	6" SCH 40 FABR STL MLC WALL SPOOL – GROOVED x FLANGED ENDS W/WALL FLANGE.	
10	1-1/4"ø VALVE OPERATOR STEM EXTENSION W/UNIVERSAL JOINT THROUGH ROOF TO STREET, SEE DETAIL [ ] ON DWG [ ]	(PL05-7)
11	8" SCH 30 MLC STL BUMPED HEAD	
12	2" SQ OPERATING NUT	
13	ENCASE BUMPED HEAD IN CONCRETE 4" MIN ALL AROUND	
14	8" SCH 30 MLC STL PIPE	
15	BLOW-OFF COVER ASSEMBLY, SEE DETAIL [ ] ON DWG [ ]	(PL09-2)
16	6" FLANGED GATE VALVE, SEE SPECS SEC 15111	
17	6" – 90° WELDED FLANGED ML STL ELBOW	
18	6" DIP PC350 OR 6" PVC CL150 DR18 PIPE	
19	6" SLEEVE TYPE COUPLING – SEE SPECS SEC 15225	
20	6" SCH 40 FABRICATED STL MLC WALL SPOOL – PLAIN ENDS W/WALL FLG	
21	6" SCH 40 ML STL PIPE – FLANGED x GROOVED	
22	GALVANIZED CARBON STEEL LADDER, SEE DETAIL [ ] ON DWG [ ]	
23	6" FLANGED ML STL OUTLET	
24	VALVE BOX AND CONCRETE COLLAR. SEE DETAIL [ ] ON DWG [ ]	(PL10-8)
25	CORP STOP, SEE DETAIL [ ] ON DWG [ ]	(PL05-5)
26	VAULT WALL	
27	6" MECHANICAL COUPLING – SEE SPECS SEC 15225	
28	BUTTERFLY VALVE – SEE SPECS SEC 15112	
29	BUTTERFLY VALVE OPERATOR – SEE SPECS SEC 15112	
30	DISMANTLING JOINT – SEE SPECS SEC 15225	
31	24" ACCESS MANWAY, SEE VAULT ACCESS MANWAY DETAIL [ ] ON DWG [ ]	(PL08-3)
32	MLC STL PIPE, SEE SPECS SEC 02511	
33	WALL PENETRATION, SEE DETAIL [ ] ON DWG [ ]	(PL05-2)
34	36"ø C.I. MANHOLE FRAME, SEE SECTION [ ] ON DWG [ ]	(PL03-B)
35	6" SCH 40 ML STL PIPE – FLANGED x PLAIN END AND WELDED WITH FLANGED x PLAIN END 45° BEND. BYPASS LINE TO BLOW-OFF ASSEMBLY	
36	2' SQ. SUMP, SEE SECTION [ ] ON DWG [ ]	(PL03-B)
37	CONCRETE FOOTING, SEE SECTION [ ] ON DWG [ ]	(PL03-B)
38	PIPE SUPPORT, SEE DETAIL [ ] ON DWG [ ]	(PL05-1)
39	INSULATING FLANGE, SEE DETAIL [ ] ON DWG [ ]	(PL05-4)
40	VALVE BOX ON VAULT, SEE DETAIL [ ] ON DWG [ ]	(PL05-7)
41	36"ø PRECAST MANHOLE RINGS, SEE SECTION [ ] ON DWG [ ]	(PL03-B)
42	6" SCH 40 MLC STL PIPE – GROOVED x PLAIN END WELDED TO 8" STL PIPE	
43	ADJUSTABLE PIPE SUPPORT, SEE SPECS SEC 15225	
44	6" SCH 40 ML STL PIPE – FLANGED x PLAIN END	

DESIGNER NOTES:

1. EACH VAULT SHOWN ON THE PIPELINE PLAN SHALL BE DETAILED WITH A STRUCTURAL PLAN, A MECHANICAL PIPING PLAN AND ALL OTHER REQUIRED SECTIONS AND DETAILS. THE VAULT PLANS SHALL INDICATE THE PIPELINE STATION REFERENCED TO THE VAULT STATIONING POINT, THE VAULT ORIENTATION TO NORTH, THE LOCATION AND PLAN ORIENTATION OF ALL OF THE VAULT APPURTENANCES AND THE MANHOLE ACCESS COVER.
2. EACH VAULT PLAN, SECTIONS AND DETAILS SHALL INDICATE ALL LAYOUT DIMENSIONS AS DETERMINED BY THE DESIGN ENGINEER OR AS REFERENCED TO DIMENSIONS ON THE "VAULT DIMENSION TABLE" PL03-6 AND THE "PIPE LOCATION TABLE" PL03-5 IN THESE STANDARD DETAILS.

(DESIGNER NOTES TO BE DELETED FROM DRAWING)

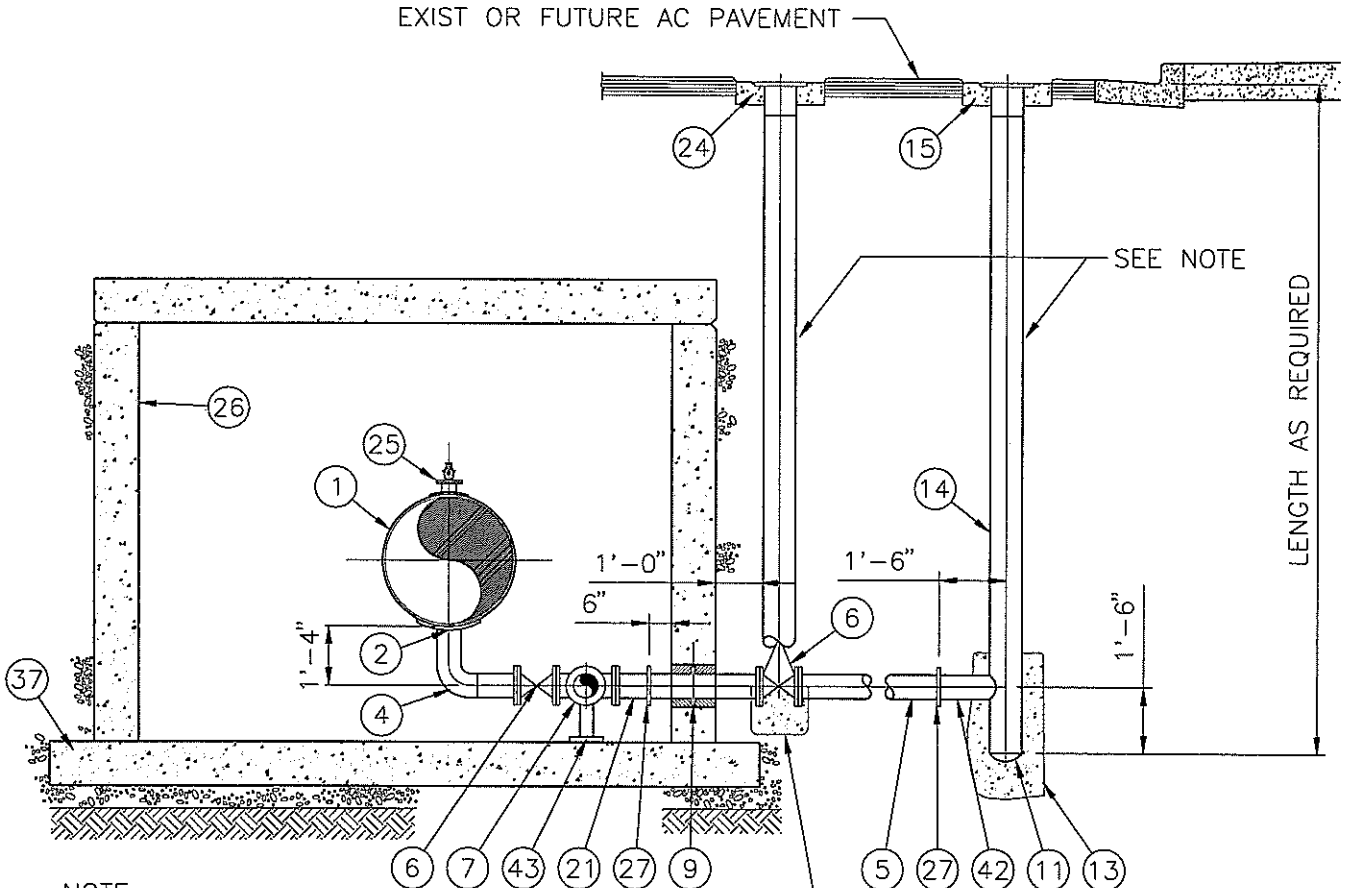

NOTE:
IN ORDER TO AVOID UNDUE STRESS ON THE VALVE BODY, THE VALVE AND BLOW-OFF ASSEMBLY MUST BE PROPERLY SUPPORTED UNTIL THE BACKFILL OPERATION IS COMPLETED.

SECTION

SCALE: 1/4" = 1'-0" PL04-A 022806

DESIGNER NOTE:
SEE PL04-4 OR PL04-6 FOR COMPONENT DESCRIPTIONS. DESIGNER NOTES TO BE DELETED FROM DRAWING

DESIGNER NOTES:

1. EACH VAULT SHOWN ON THE PIPELINE PLAN SHALL BE DETAILED WITH A STRUCTURAL PLAN, A MECHANICAL PIPING PLAN AND ALL OTHER REQUIRED SECTIONS AND DETAILS. THE VAULT PLANS SHALL INDICATE THE PIPE LINE STATION REFERENCED TO THE VAULT STATIONING POINT, THE VAULT ORIENTATION TO NORTH, THE LOCATION AND PLAN ORIENTATION OF ALL OF THE VAULT APPURTENANCES AND THE MANHOLE ACCESS COVER.

2. EACH VAULT PLAN, SECTIONS AND DETAILS SHALL INDICATE ALL LAYOUT DIMENSIONS AS DETERMINED BY THE DESIGN ENGINEER OR AS REFERENCED TO DIMENSIONS ON THE "VAULT DIMENSION TABLE" PL03-6 AND THE "PIPE LOCATION TABLE" PL03-5 IN THESE STANDARD DETAILS.

(DESIGNER NOTES TO BE DELETED FROM DRAWING)

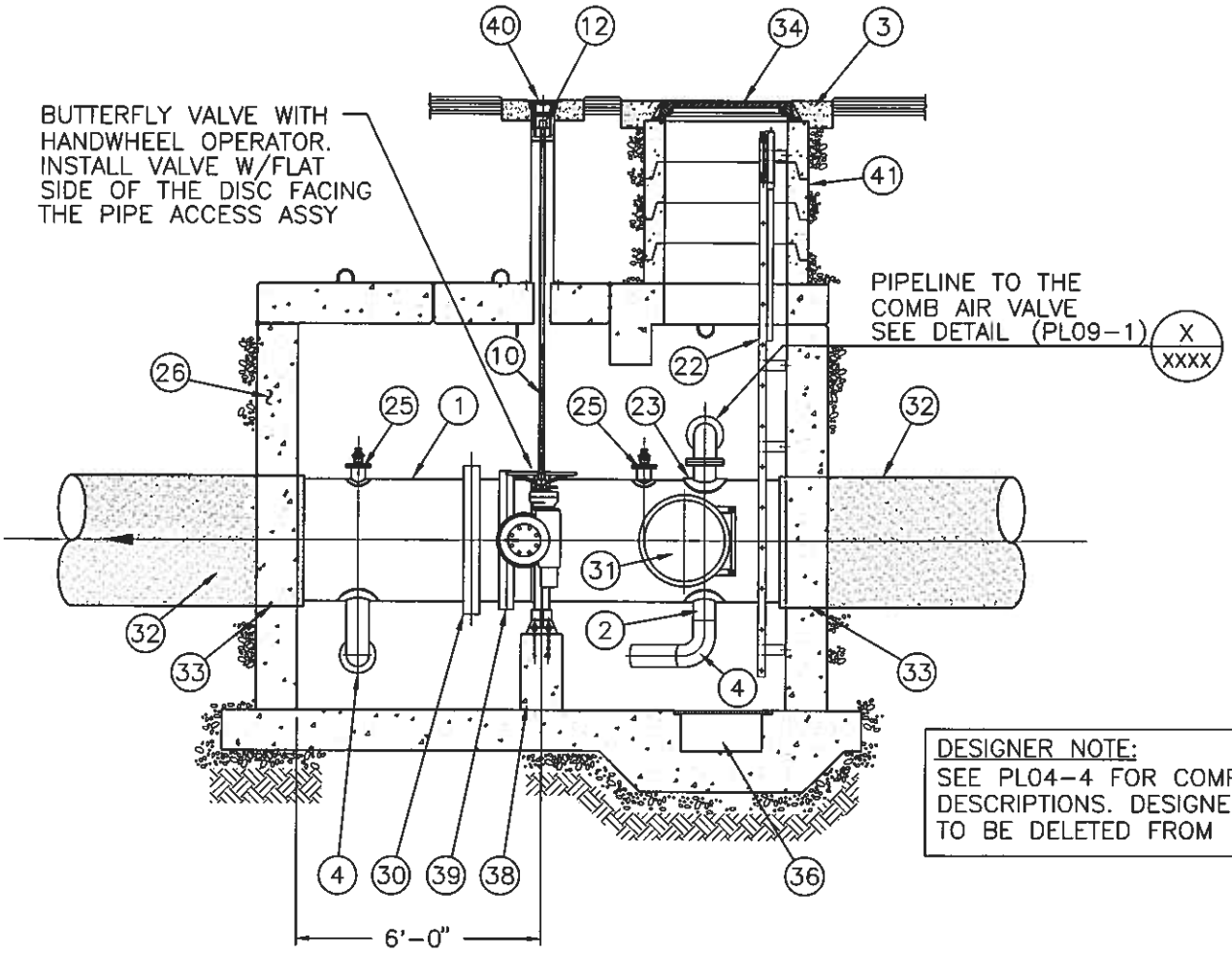

DESIGNER NOTE:
SEE PL04-4 FOR COMPONENT DESCRIPTIONS. DESIGNER NOTES TO BE DELETED FROM DRAWING

PIPING PROFILE SECTION - MECHANICAL COUPLING

SCALE: 1/4" = 1'-0"

PL04-B 070208

DESIGNER NOTES:

1. EACH VAULT SHOWN ON THE PIPELINE PLAN SHALL BE DETAILED WITH A STRUCTURAL PLAN, A MECHANICAL PIPING PLAN AND ALL OTHER REQUIRED SECTIONS AND DETAILS. THE VAULT PLANS SHALL INDICATE THE PIPELINE STATION REFERENCED TO THE VAULT STATIONING POINT, THE VAULT ORIENTATION TO NORTH, THE LOCATION AND PLAN ORIENTATION OF ALL OF THE VAULT APPURTENANCES AND THE MANHOLE ACCESS COVER.
2. EACH VAULT PLAN, SECTIONS AND DETAILS SHALL INDICATE ALL LAYOUT DIMENSIONS AS DETERMINED BY THE DESIGN ENGINEER OR AS REFERENCED TO DIMENSIONS ON THE "VAULT DIMENSION TABLE" PL03-6 AND THE "PIPE LOCATION TABLE" PL03-5 IN THESE STANDARD DETAILS.

(DESIGNER NOTES TO BE DELETED FROM DRAWING)

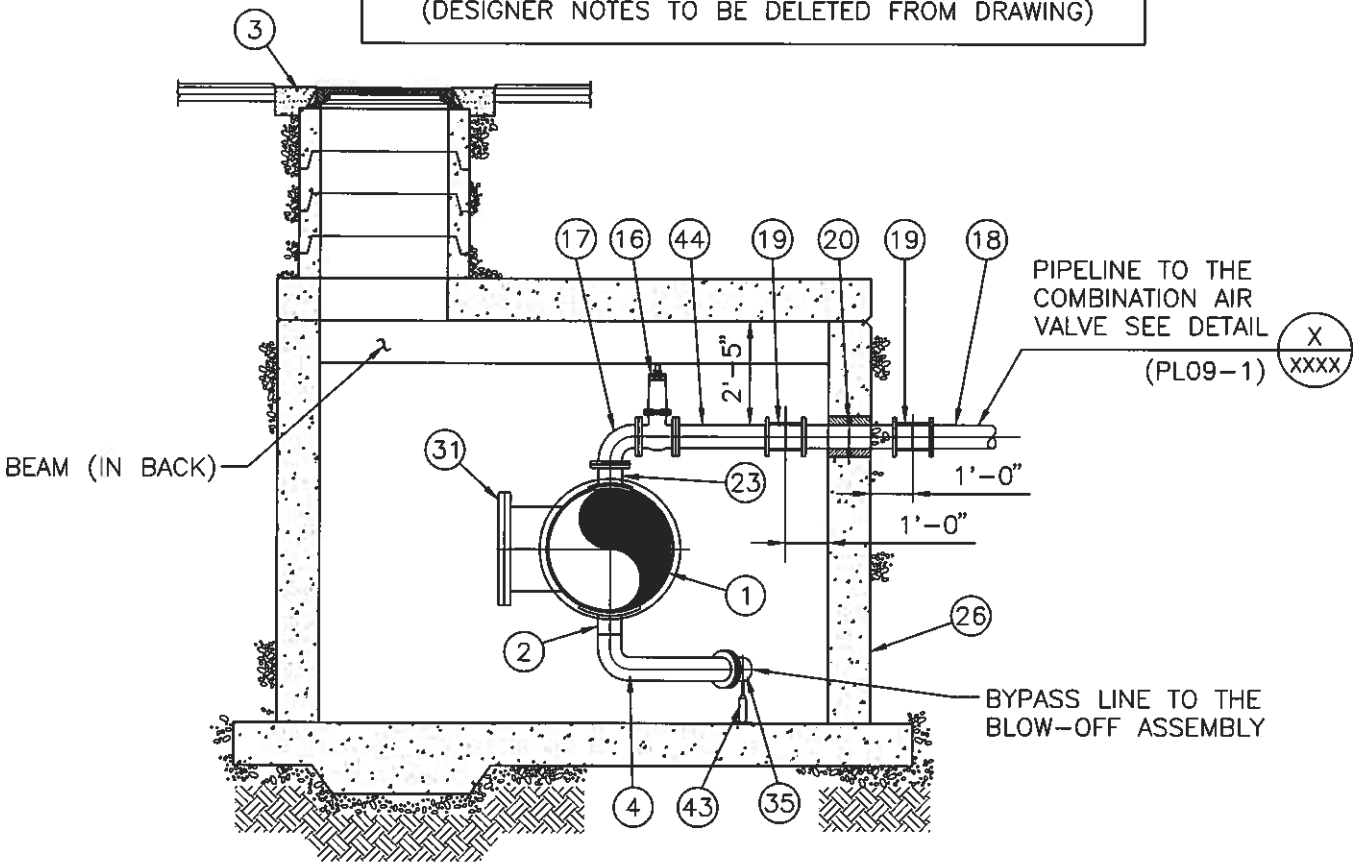

DESIGNER NOTE:
SEE PL04-4 OR PL04-6 FOR COMPONENT DESCRIPTIONS. DESIGNER NOTES TO BE DELETED FROM DRAWING

SECTION

SCALE: 1/4" = 1'-0" PL04-C 070208

DESIGNER NOTES:

1. EACH VAULT SHOWN ON THE PIPELINE PLAN SHALL BE DETAILED WITH A STRUCTURAL PLAN, A MECHANICAL PIPING PLAN AND ALL OTHER REQUIRED SECTIONS AND DETAILS. THE VAULT PLANS SHALL INDICATE THE PIPE LINE STATION REFERENCED TO THE VAULT STATIONING POINT, THE VAULT ORIENTATION TO NORTH, THE LOCATION AND PLAN ORIENTATION OF ALL OF THE VAULT APPURTENANCES AND THE MANHOLE ACCESS COVER.

2. EACH VAULT PLAN, SECTIONS AND DETAILS SHALL INDICATE ALL LAYOUT DIMENSIONS AS DETERMINED BY THE DESIGN ENGINEER OR AS REFERENCED TO DIMENSIONS ON THE "VAULT DIMENSION TABLE" PL03-6 AND THE "PIPE LOCATION TABLE" PL03-5 IN THESE STANDARD DETAILS.

(DESIGNER NOTES TO BE DELETED FROM DRAWING)

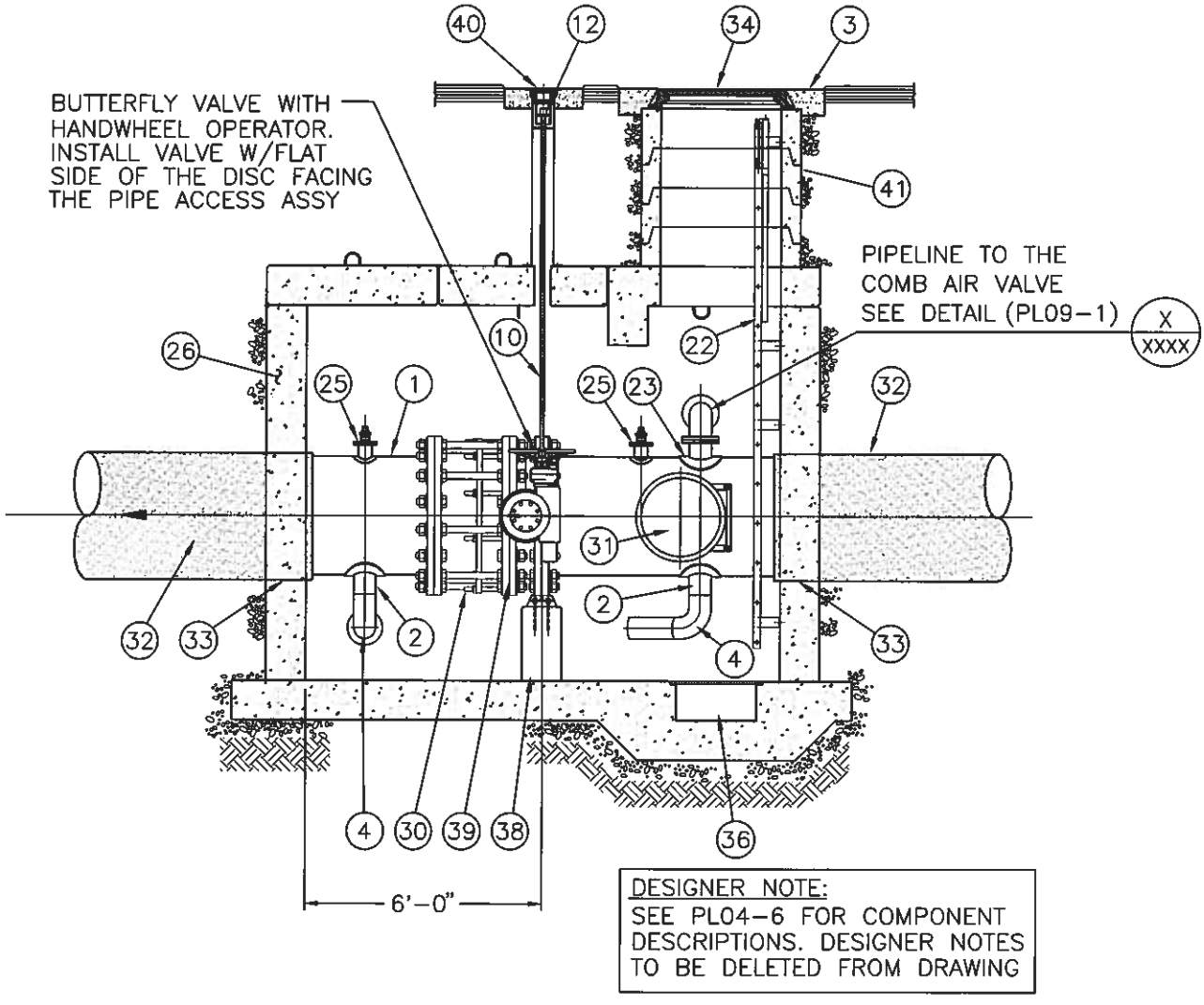

DESIGNER NOTE:
SEE PL04-6 FOR COMPONENT DESCRIPTIONS. DESIGNER NOTES TO BE DELETED FROM DRAWING

PIPING PROFILE SECTION - DISMANTLING JOINT

SCALE: 1/4" = 1'-0"

PL04-D 070208

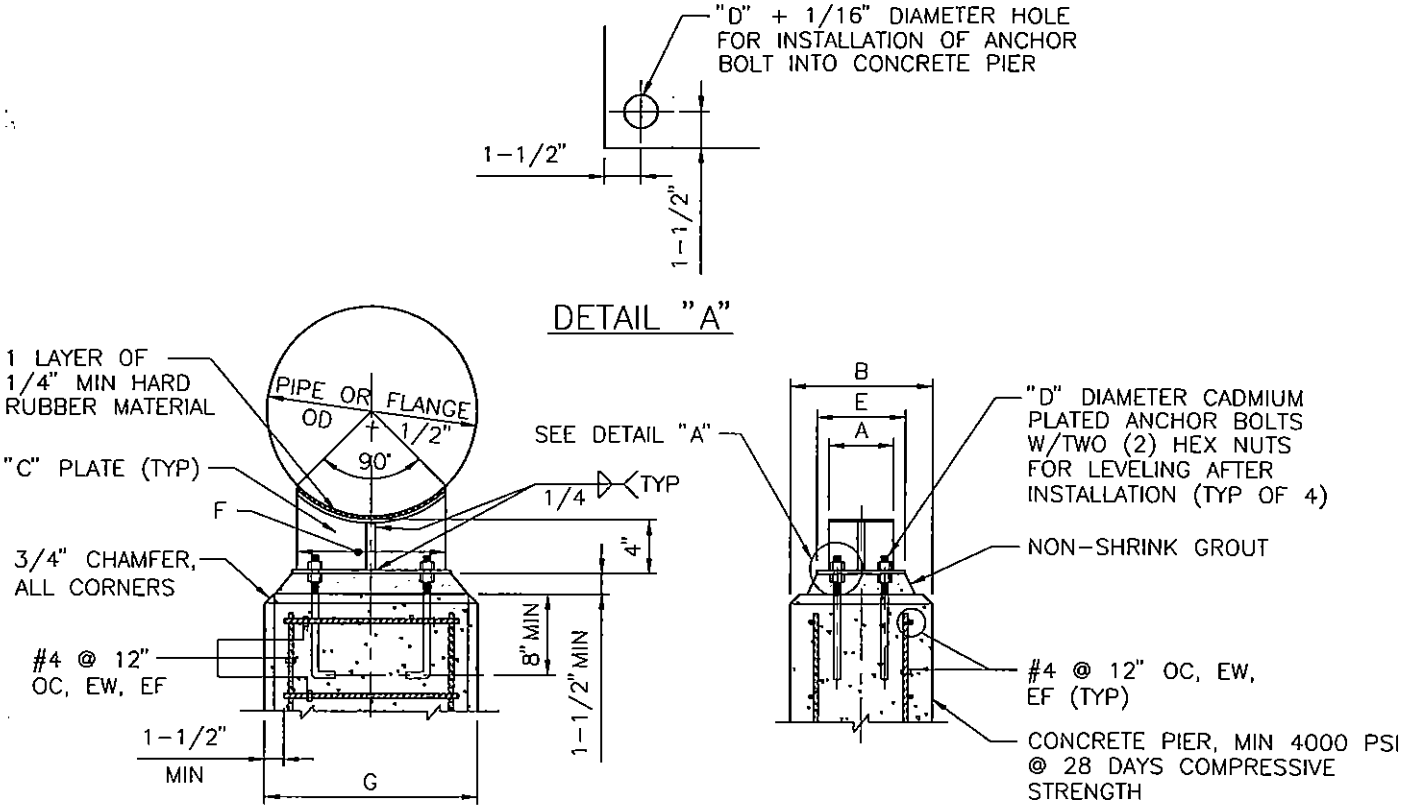

NOTE: GALVANIZE ASSEMBLY AFTER WELDING FABRICATION.

PIPE SUPPORT TABLE

NOMINAL PIPE SIZE						SUPPORTING STL CYL PIPE		SUPPORTING FLANGE	
	A	B	C	D	E	F	G	F	G
12"	4"	12"	3/8"	5/8"	6"	10"	14"	14"	18"
16"	4"	12"	3/8"	5/8"	6"	12"	16"	17"	21"
18"	4"	12"	3/8"	5/8"	6"	14"	18"	18"	22"
20"	4"	12"	3/8"	5/8"	6"	16"	20"	20"	24"
24"	4"	12"	3/8"	5/8"	6"	19"	23"	23"	27"
30"	5"	12"	3/8"	3/4"	6"	23"	29"	28"	34"
36"	6"	15"	3/8"	3/4"	6"	27"	33"	33"	39"
42"	6"	18"	1/2"	1"	8"	32"	38"	38"	44"
48"	6"	18"	1/2"	1"	8"	36"	42"	42"	48"
54"	6"	18"	1/2"	1"	8"	40"	46"	47"	53"
60"	6"	18"	1/2"	1"	8"	44"	50"	52"	58"
66"	6"	18"	1/2"	1"	8"	48"	54"	57"	63"
72"	6"	18"	1/2"	1"	8"	52"	58"	62"	68"

PIPE SUPPORT DETAIL

NOT TO SCALE PL05-1 071003

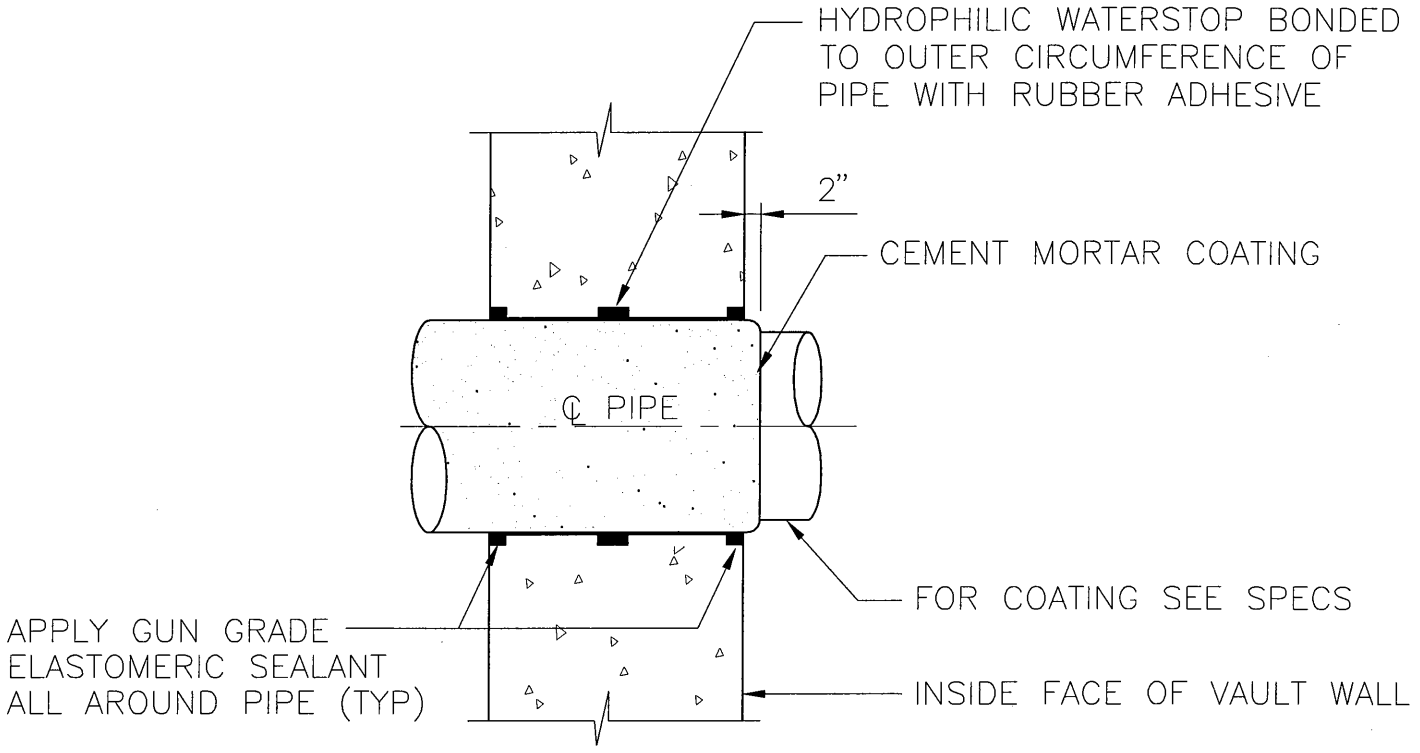

WALL PENETRATION DETAIL

NOT TO SCALE PL05-2 122603

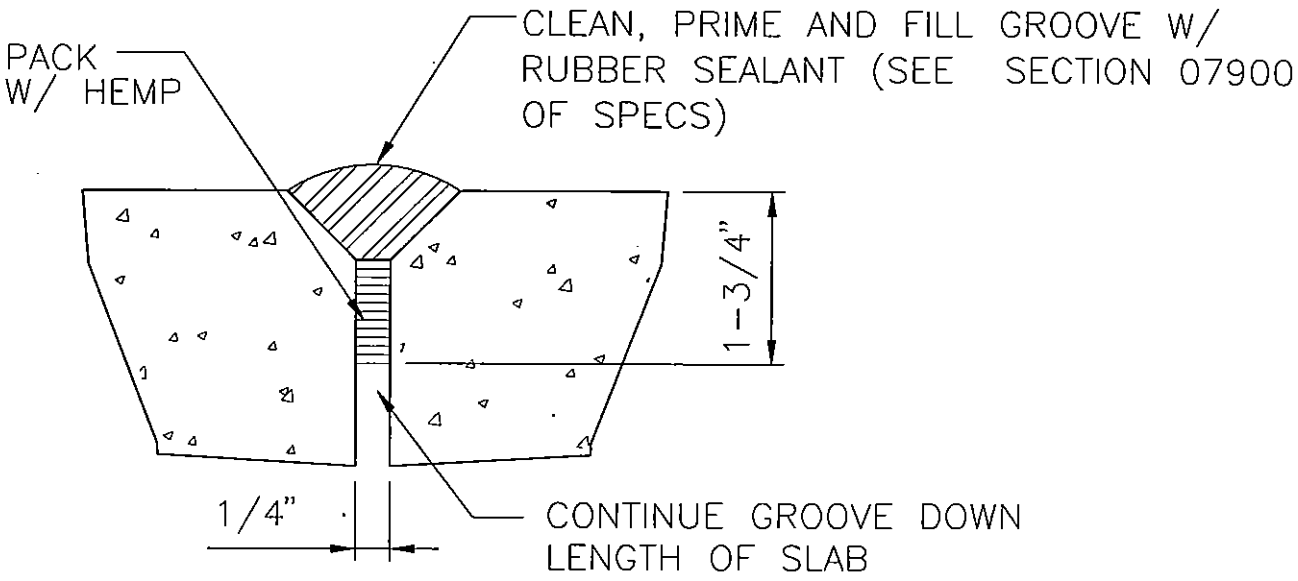

SEALANT GROOVE DETAIL

NOT TO SCALE PL05-3 071003

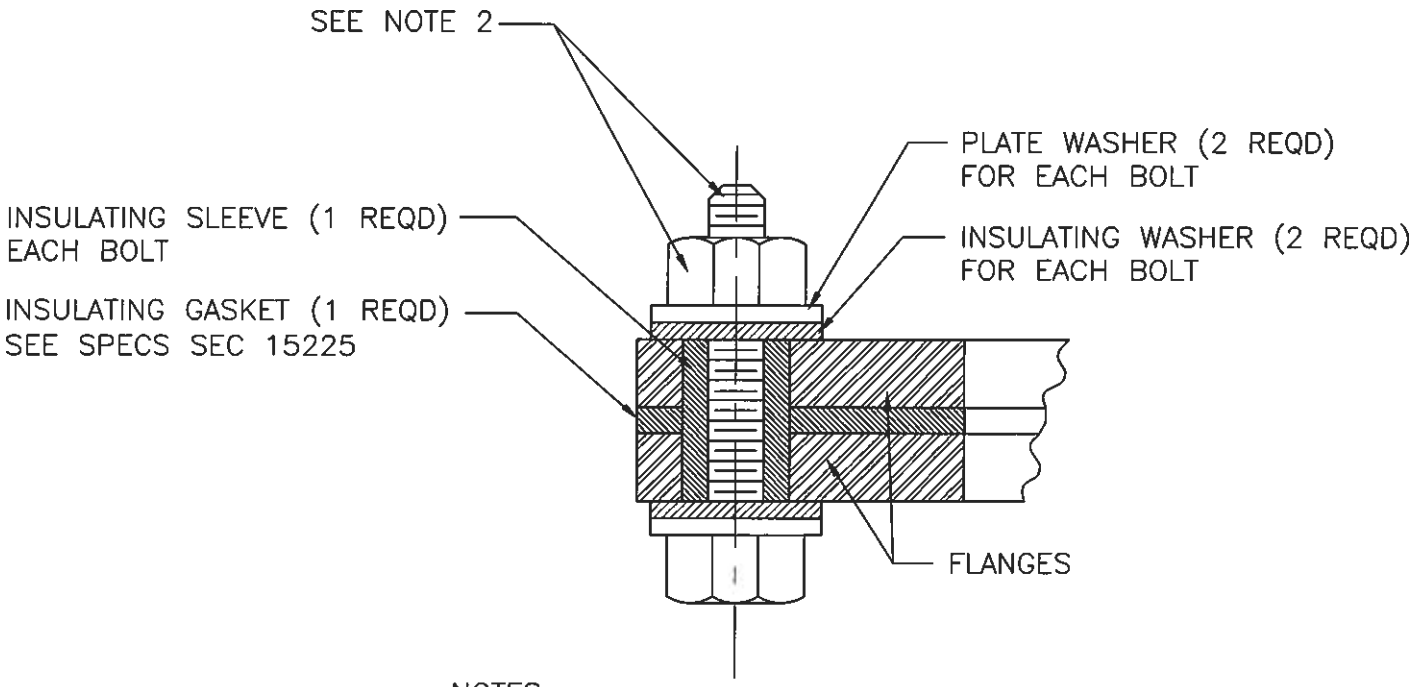

NOTES:

1. TORQUE BOLTS PER INSULATING FLANGE SET MANUFACTURERS RECOMMENDATIONS (TYP).

2. VAULT LOCATIONS:
   ASTM F593, SS TYPE 316 BOLT WITH ASTM A563 NUT, XYLAN 1000 SERIES COATING.

   BURIED OR EXPOSED LOCATIONS:
   ASTM A307 BOLT – UNC THREADS, WITH ASTM A563 NUT, ZINC COATED.

INSULATING FLANGE SET DETAIL

NOT TO SCALE PL05–4 022509

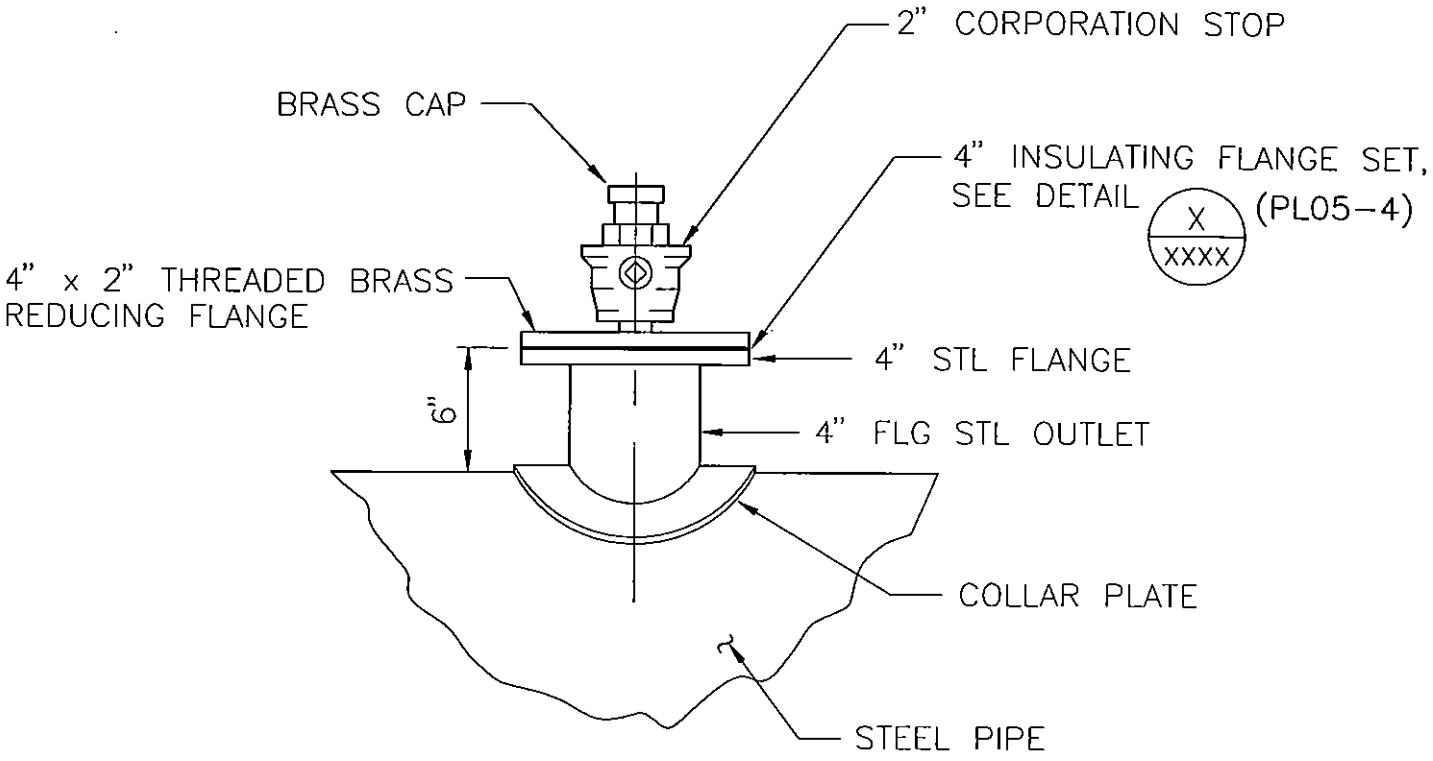

CORPORATION STOP DETAIL

NOT TO SCALE PL05-5 071003

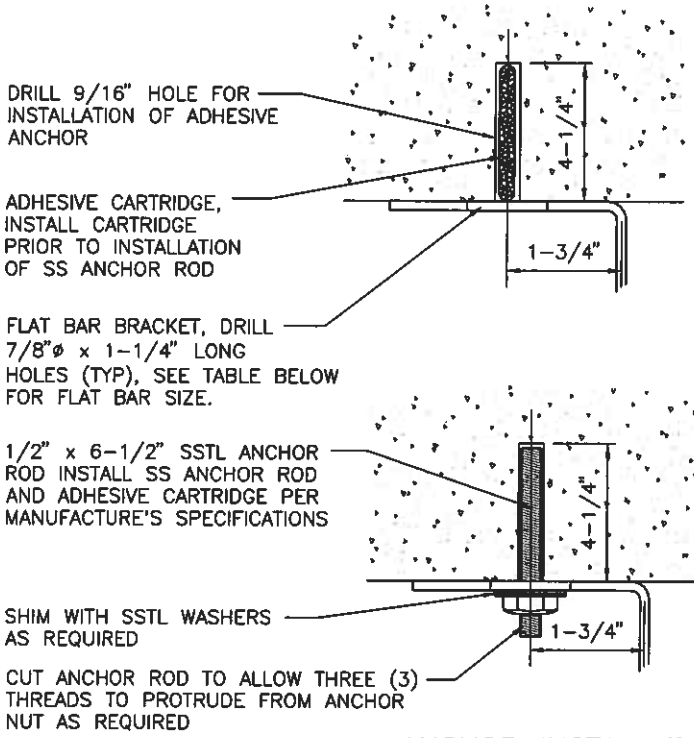

ANCHOR INSTALLATION

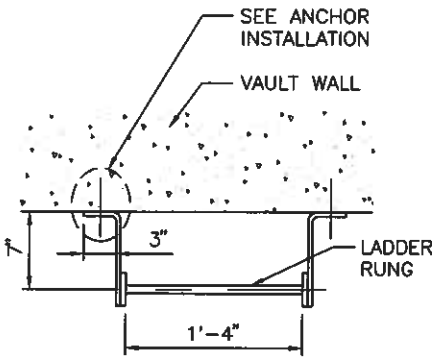

LADDER IN VAULT

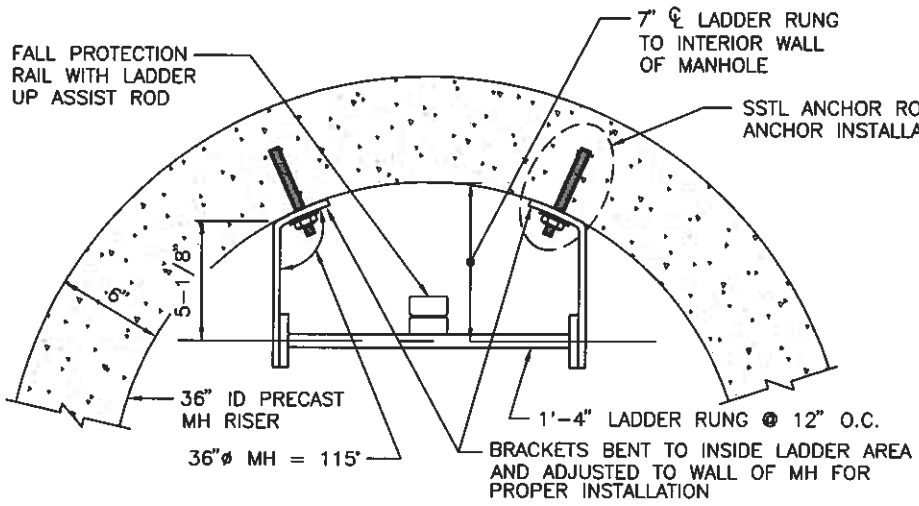

LADDER IN MANHOLE

FLAT BAR SIZE	
LADDER LENGTH	FLAT BAR SIZE
5'-0" TO 20'-0"	3" x 3/8"
OVER 20'-0"	4" x 1/2"

NOTES

1. ALL FIXED LADDERS (OVER 20 FEET IN LENGTH) SHALL BE INSTALLED WITH A FALL PROTECTION RAIL AS SHOWN ABOVE.
2. APPROVAL OF THE ENGINEER REQUIRED FOR ANY BRACKET SPACING OVER 5'-0" OC
3. LADDER SHALL BE MADE OF MILD CARBON STEEL WITH 3/4"ø SMOOTH BAR RUNGS PLUG WELDED TO RUNNERS.
4. GALVANIZE LADDER ASSEMBLY AFTER WELDING.

LADDER INSTALLATION DETAILS

NOT TO SCALE PL05-6 110309

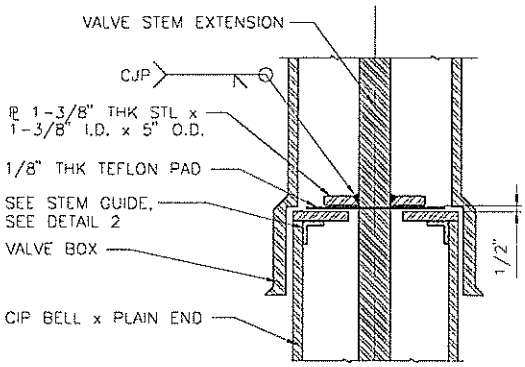

GUIDE PLATE – DETAIL 1

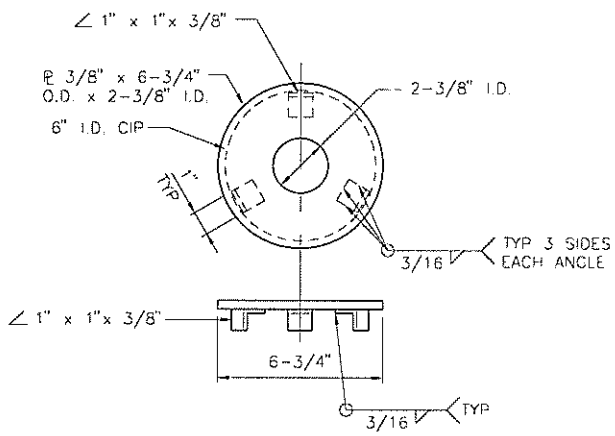

STEM GUIDE – DETAIL 2

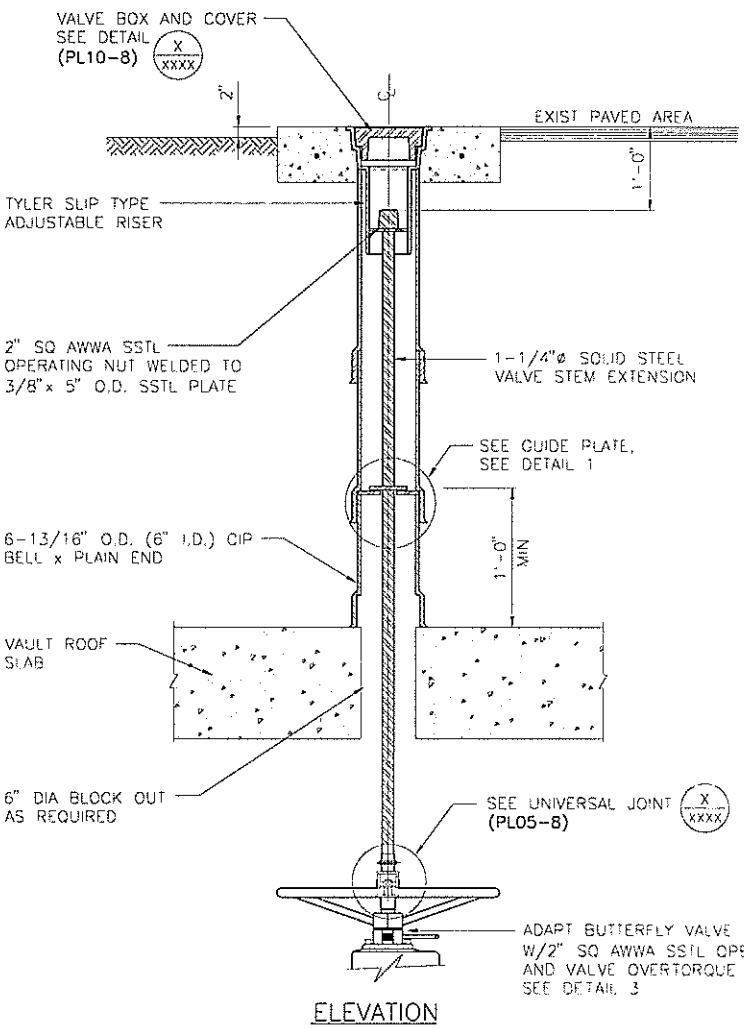

ELEVATION

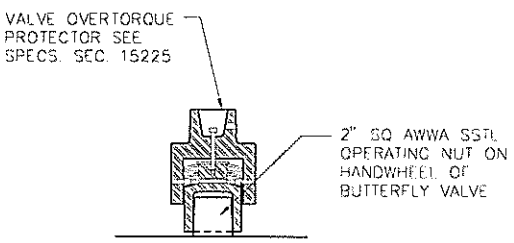

HANDWHEEL OPERATING NUT – DETAIL 3

VALVE BOX ON VAULT DETAIL

NOT TO SCALE PL05-7 062007

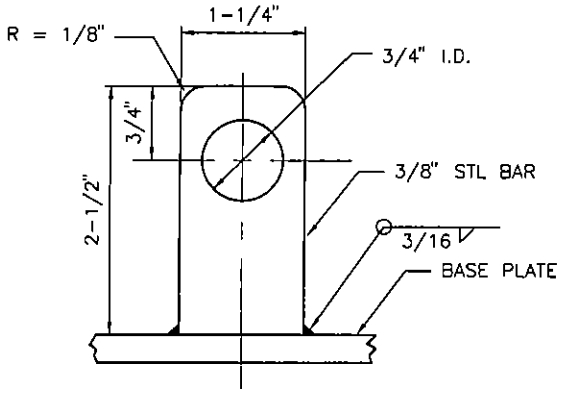

UNIVERSAL JOINT SIDES

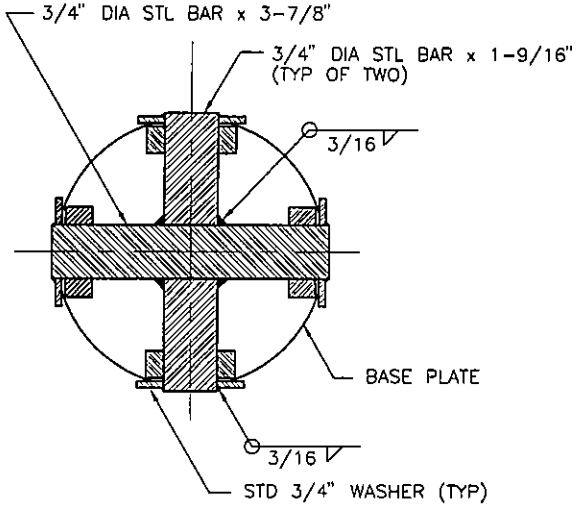

JOINT CROSS

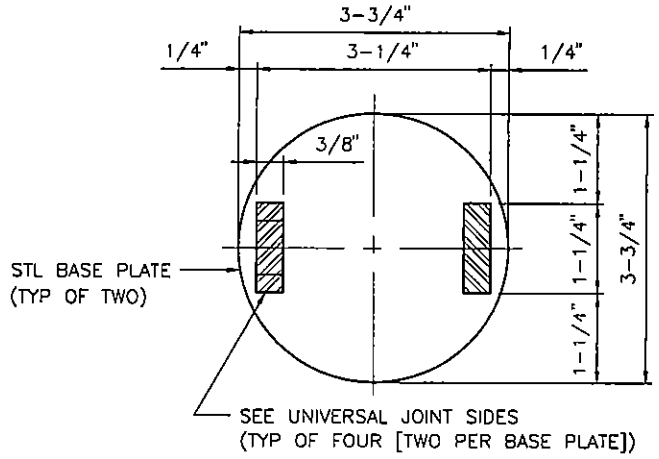

BASE PLATE

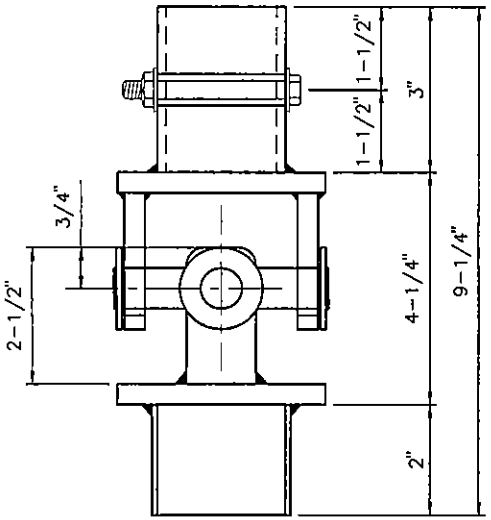

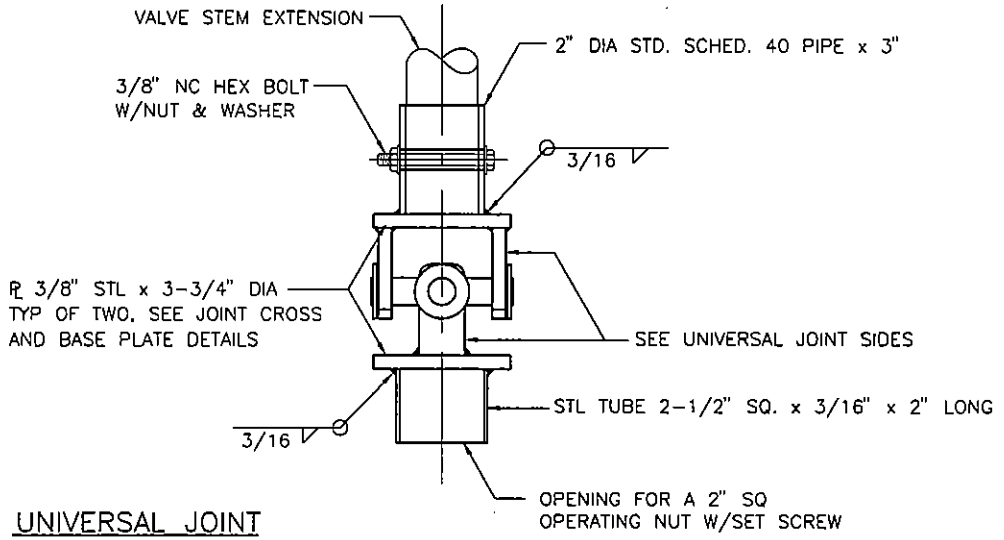

UNIVERSAL JOINT

NOTE
ASSEMBLY SHALL BE GALVANIZED AFTER WELDING.

UNIVERSAL JOINT DETAIL

NOT TO SCALE PL05-8 071003

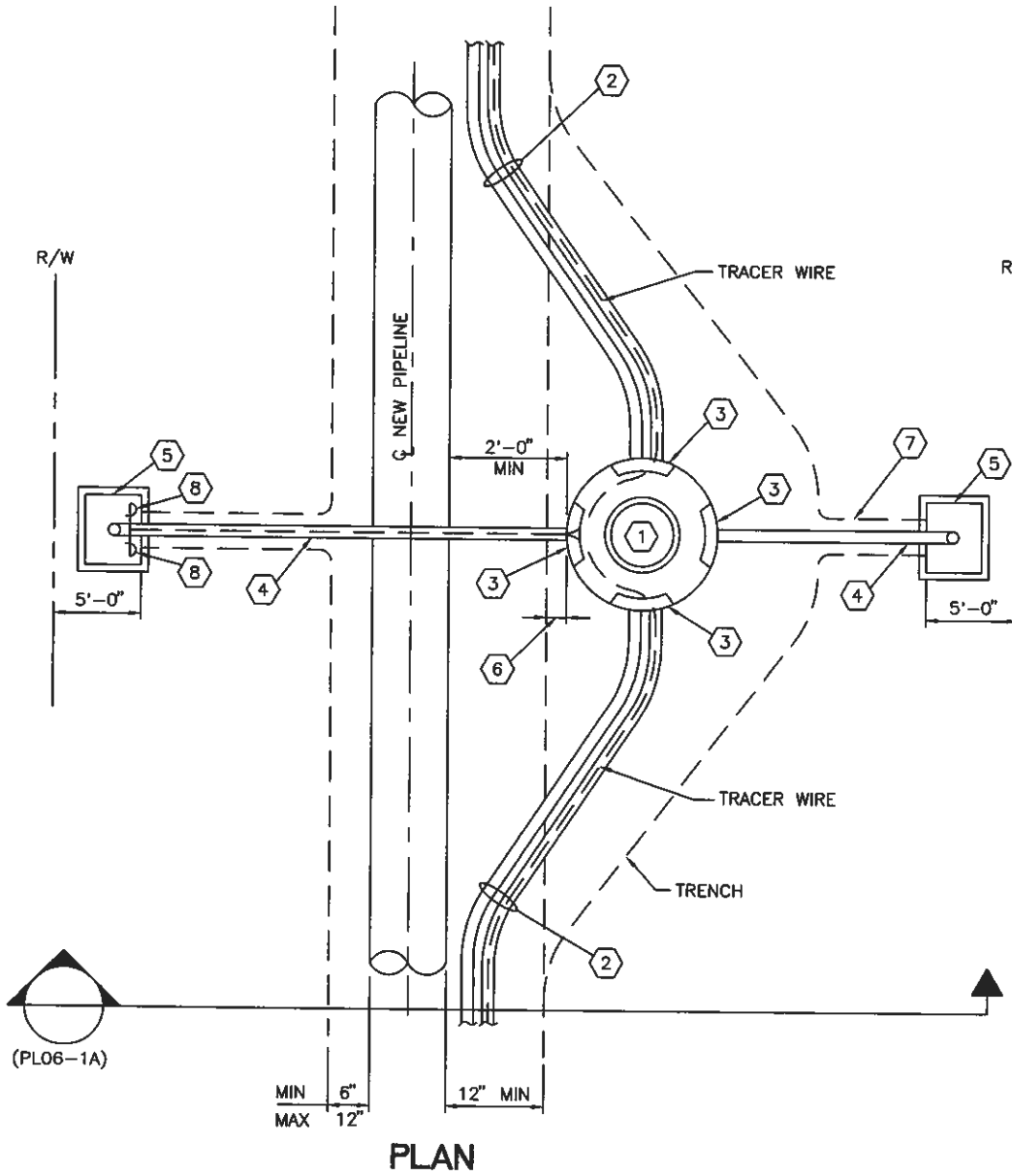

PLAN

DESIGNER NOTE:
INSTALLATION OF BOTH FIBER OPTIC PULLBOXES SHALL BE DETERMINED BY LVVWD ENGINEER PER PROJECT REQUIREMENTS (TYP)

LEGEND

1. FIBER SPLICE PIT ASSEMBLY. SEE SPECS AND DETAIL X/XXXX (PL06-3)
2. 2-4" CONDUITS, SCHEDULE 40 PVC, SWEEP UP TO SPLICE PIT ENTRY.
3. PENETRATE AND CAP CONDUIT AT SPLICE PIT. SEE DETAIL X/XXXX (PL08-6)
4. 1-4" CONDUIT, SCHEDULE 40 PVC, UP TO #5 CONCRETE PULLBOX AT EDGE OF RIGHT-OF-WAY. (WHERE RIGHT-OF-WAY IS EXISTING OR OBTAINED).
5. CLARK COUNTY UNIFORM STANDARD DRAWING NO. 326 #5 CONCRETE PULLBOX WITH CONCRETE COLLAR/PANEL (SEE NOTE) MARKED "LVVWD FIBER OPTIC", H20 LOADING BOLT-DOWN GASKETED STEEL COVER. (TO BE REPLACED WHEN RIGHT-OF-WAY IS FULLY DEVELOPED).
6. ACTUAL DISTANCE BETWEEN FIBER SPLICE PIT AND EDGE OF PIPE TRENCH TO BE DETERMINATED BY SOIL CONDITIONS, BUT SHALL NOT BE LESS THAN 1'-0".
7. TRENCH AS REQUIRED (12" MIN) FROM SPLICE PIT TO PULLBOX NEAR EDGE OF RIGHT-OF-WAY.
8. COIL 48" OF TRACER WIRE. STRIP 3/4" OF INSULATION OF EACH TRACER AND TWIST A SEALANT-FILLED WIRE-NUT ON EACH TRACER TO PREVENT MOISTURE BUT ALLOW WIRE-NUT TO BE EASILY REMOVED FOR FUTURE USE.

NOTE:

UNIMPROVED AREAS INSTALL 12" WIDE x 4" THICK CONCRETE COLLAR.
IMPROVED AREAS INSTALL NEW SIDEWALK PANEL AS REQUIRED.

FIBER OPTIC PULLBOX LOCATION

NOT TO SCALE PL06-1 070208

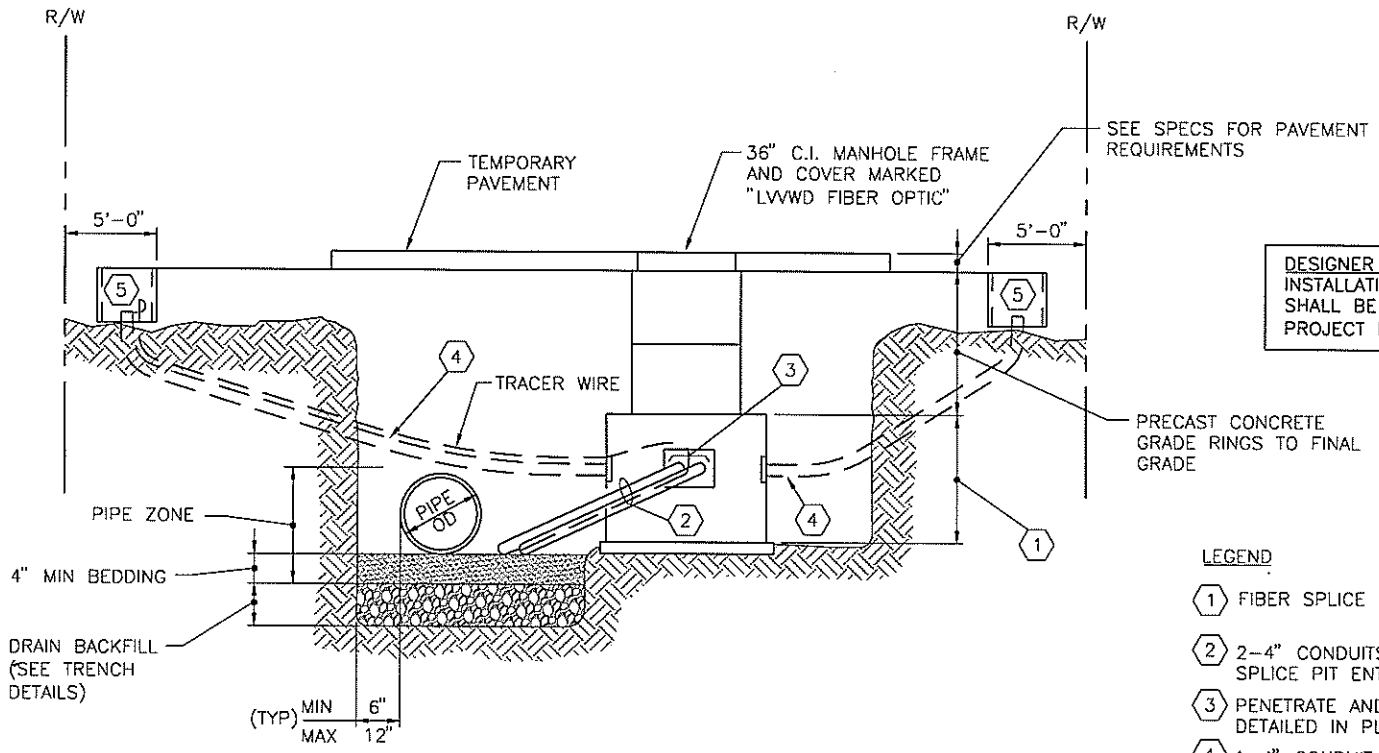

SECTION

NOT TO SCALE PL06-1A 120605

DESIGNER NOTE:
INSTALLATION OF BOTH FIBER OPTIC PULLBOXES SHALL BE DETERMINED BY LVVWD ENGINEER PER PROJECT REQUIREMENTS (TYP)

LEGEND

1. FIBER SPLICE PIT ASSEMBLY. SEE SPECS AND DETAIL X/XXXX (PL06-3)
2. 2-4" CONDUITS, SCHEDULE 40 PVC, SWEEP UP TO SPLICE PIT ENTRY.
3. PENETRATE AND CAP CONDUIT AT PIT INTERIOR WALLS AS DETAILED IN PL08-6. GROUT AROUND CONDUIT OPENINGS.
4. 1-4" CONDUIT, SCHEDULE 40 PVC, UP TO #5 CONCRETE PULLBOX AT EDGE OF RIGHT-OF-WAY. (WHERE RIGHT-OF-WAY IS EXISTING OR OBTAINED).
5. CLARK COUNTY UNIFORM STANDARD DRAWING NO. 326 #5 CONCRETE PULLBOX WITH CONCRETE COLLAR/PANEL (SEE NOTE) MARKED "LVVWD FIBER OPTIC", H20 LOADING BOLT-DOWN GASKETED STEEL COVER. (TO BE REPLACED WHEN RIGHT-OF-WAY IS FULLY DEVELOPED).

NOTE:

UNIMPROVED AREAS INSTALL 12" WIDE x 4" THICK CONCRETE COLLAR.
IMPROVED AREAS INSTALL NEW SIDEWALK PANEL AS REQUIRED.

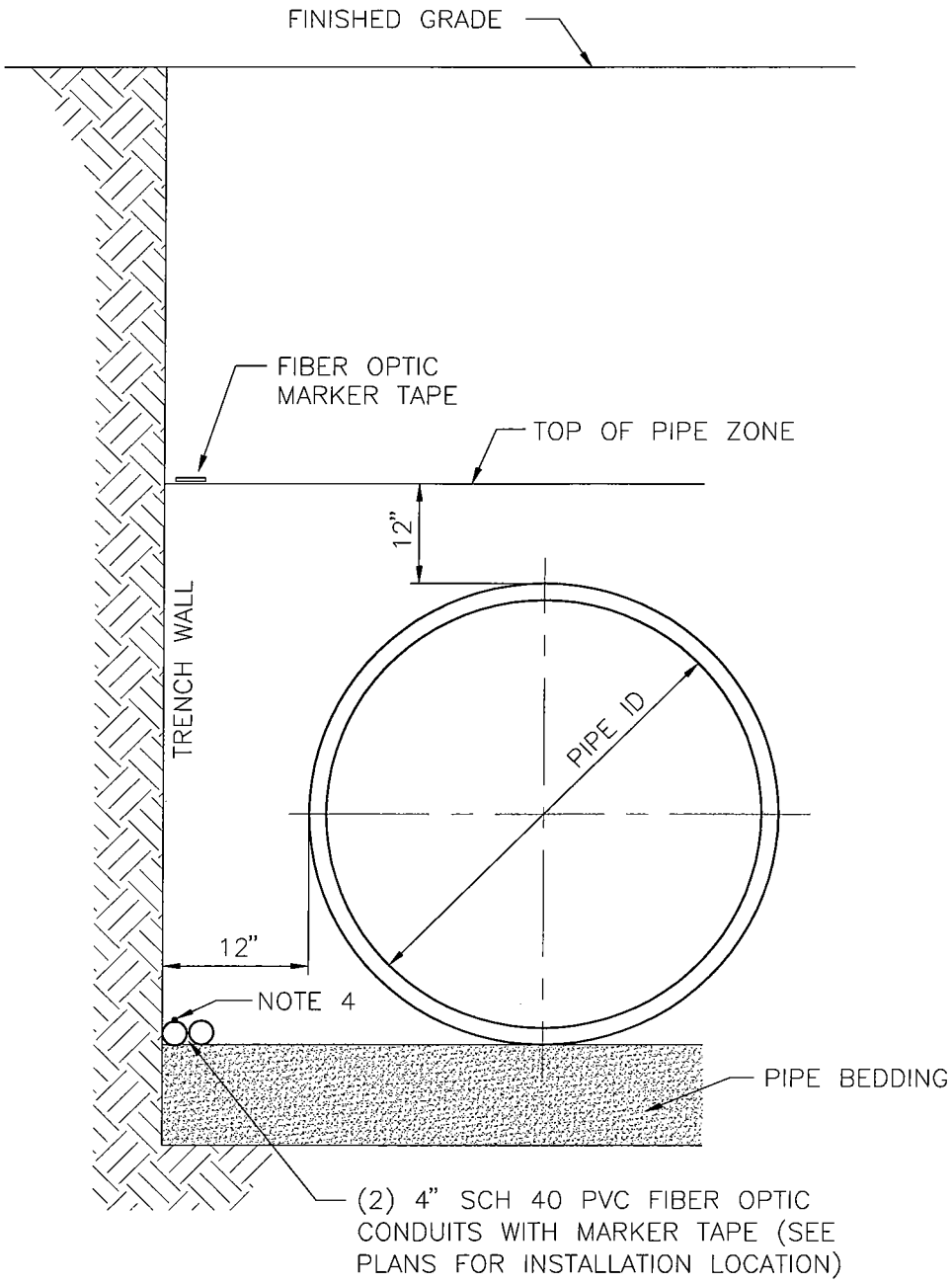

NOTES:

1. CHANGES IN DIRECTION OF THE FIBER OPTIC CONDUIT BY MORE THAN 10° HORIZONTALLY OR VERTICALLY SHALL BE ACCOMPLISHED USING BENDS WITH A MINIMUM RADIUS OF 12 TIMES THE CONDUIT DIAMETER.
2. FOR ADDITIONAL TRENCH BACKFILL REQUIREMENTS SEE DETAIL X/XXXX
3. SUPPORT FIBER OPTIC CONDUITS WITH SANDBAGS AND SPOT LOAD AS REQUIRED DURING INSTALLATION OF CLSM IN PIPE ZONE AND PIPE BEDDING AREAS.
4. 12 AWG TRACER WIRE WITH BLUE THW INSULATION. ATTACH TO CONDUIT EVERY 8 FEET WITH WRAPPED ELECTRICAL TAPE. LABEL TRACER WIRE "F.O. CONDUIT TRACER" IN ACCORDANCE WITH SECTION 16075. SPACE LABELS EVERY 8' ALONG THE PIPELINE AND EVERY 4" IN THE SPLICE PIT AND PULL BOXES.

FIBER OPTIC CONDUIT TRENCH LOCATION

NOT TO SCALE PL06-2 021405

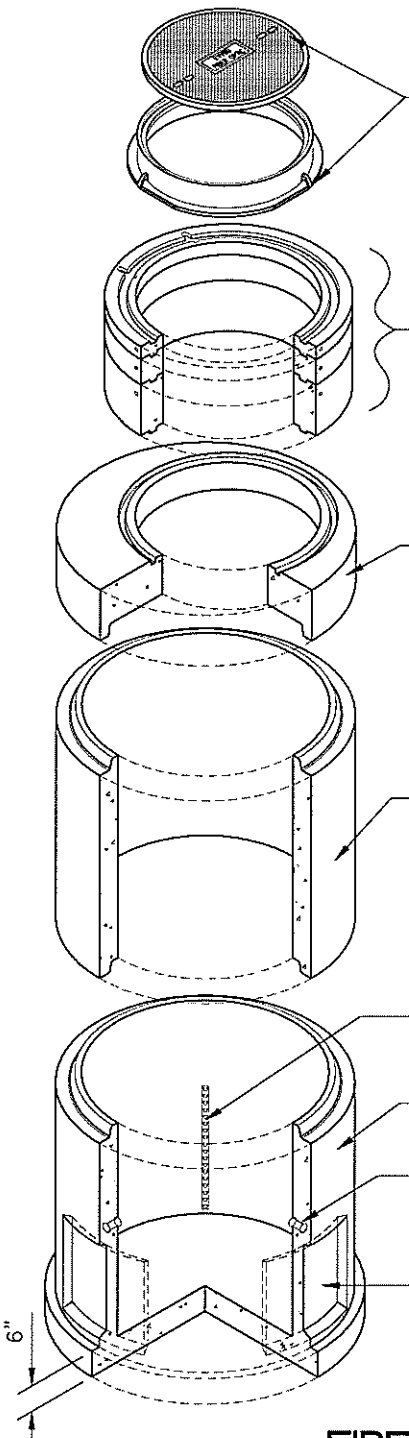

NOTES:

1. ENTIRE PIT ASSEMBLY AND CONDUIT INSTALLATION SHALL BE CLEAN AND DRY AT TIME OF ACCEPTANCE.
2. BACKFILL AROUND PIT ASSEMBLY IN ACCORDANCE WITH SPEC SEC 02300
3. INSTALL LADDER ASSEMBLY IN SPLICE PIT ASSEMBLIES DEEPER THAN 4'-0", SEE X/XXXX (PL05-6)
4. FINAL MANHOLE FRAME ADJUSTMENT AND CONCRETE COLLAR INSTALLATION REQUIREMENTS, SEE X/XXXX (PL08-4)
5. INSTALL 3' DIA x 3' DEEP DRAIN GRAVEL PACK UNDER 12" DRAIN HOLE AND COVER (CENTERED).

FIBER OPTIC SPLICE PIT ASSEMBLY

NOT TO SCALE PL06-3 030206

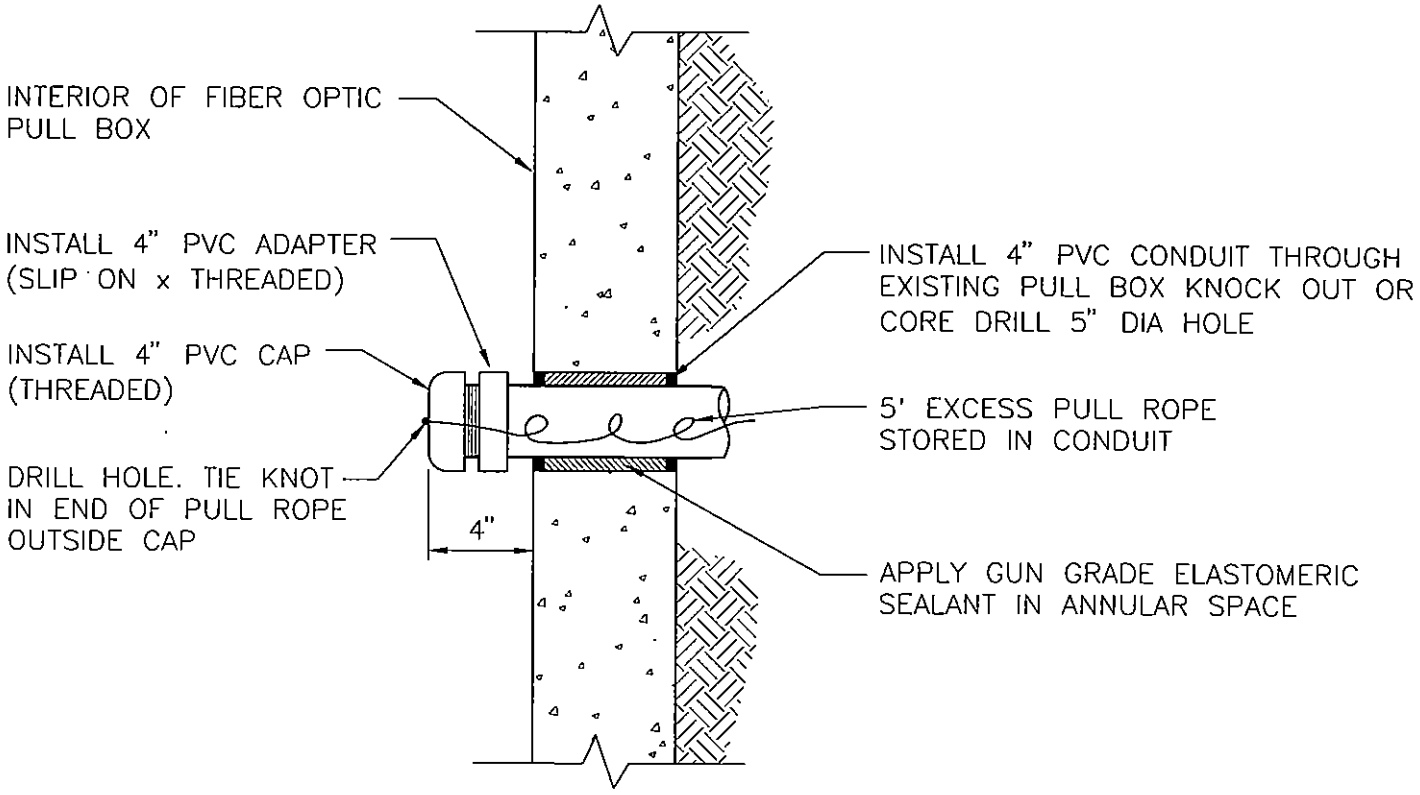

CONDUIT PENETRATION FOR VAULT STRUCTURES

NOT TO SCALE

PL06-4 071003

DESIGNER NOTE:
THIS ACCESS MANHOLE PLAN TO BE USED FOR THE REDUCING CONE MANHOLE ASSEMBLY ONLY.

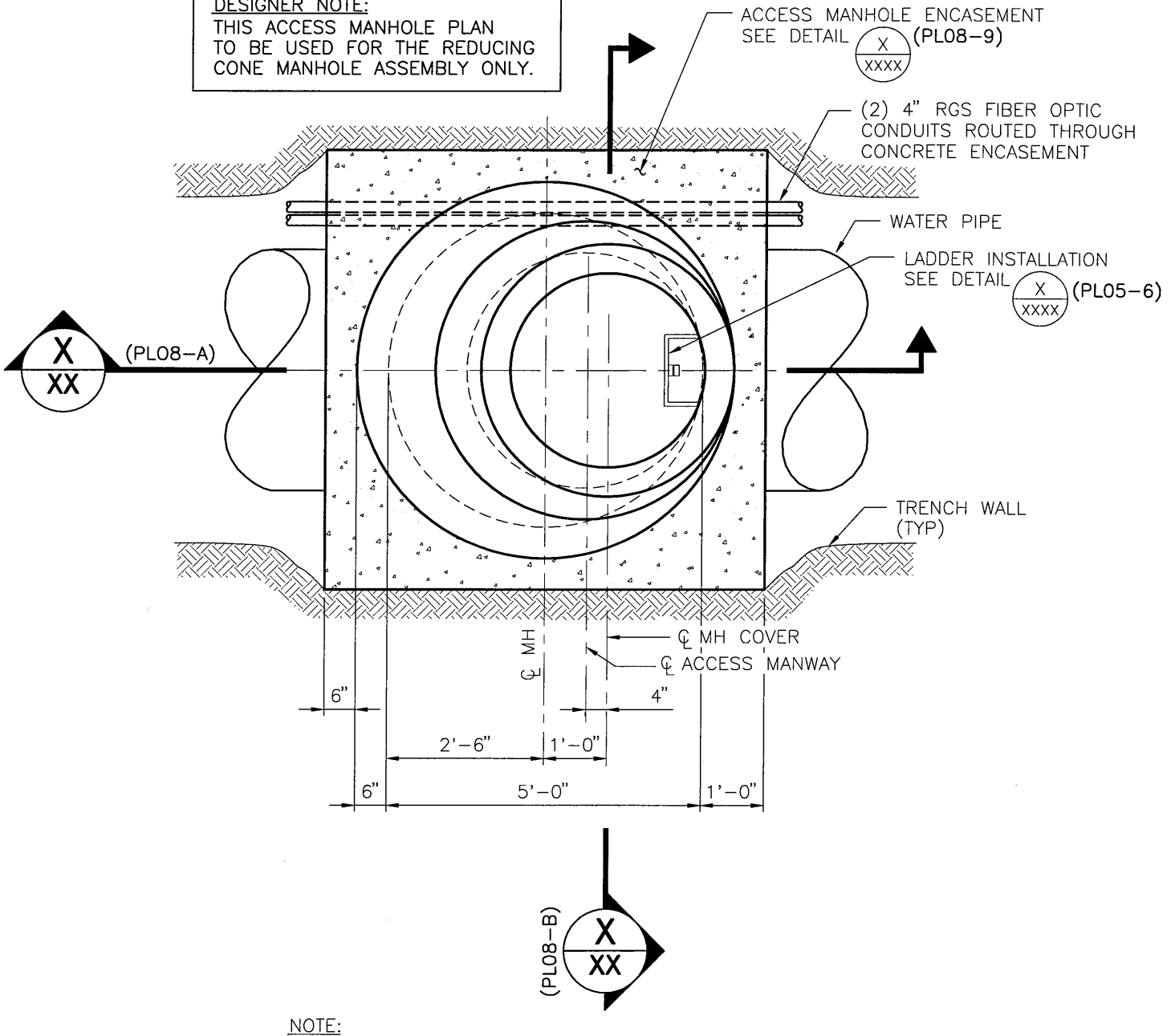

NOTE:
MH FRAME AND COVER AND MANWAY ARE BOTH SHOWN

ACCESS MANHOLE PLAN

NOT TO SCALE PL08-1 122603

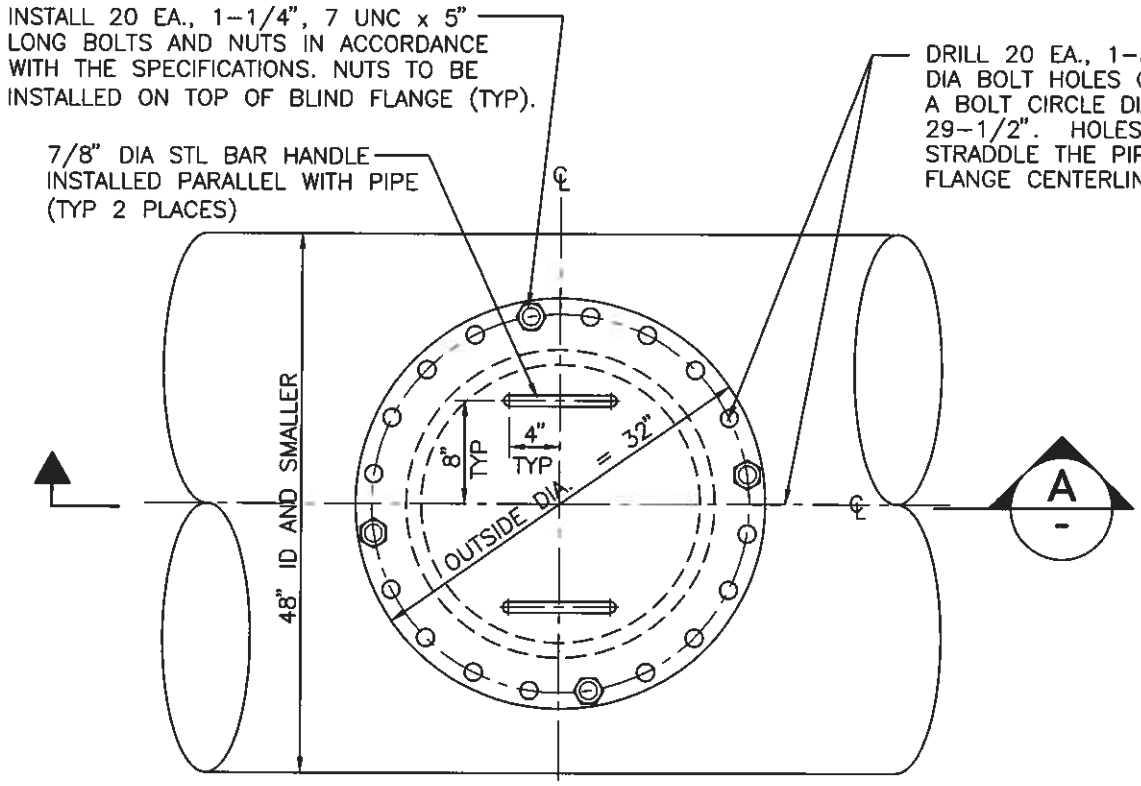

PLAN

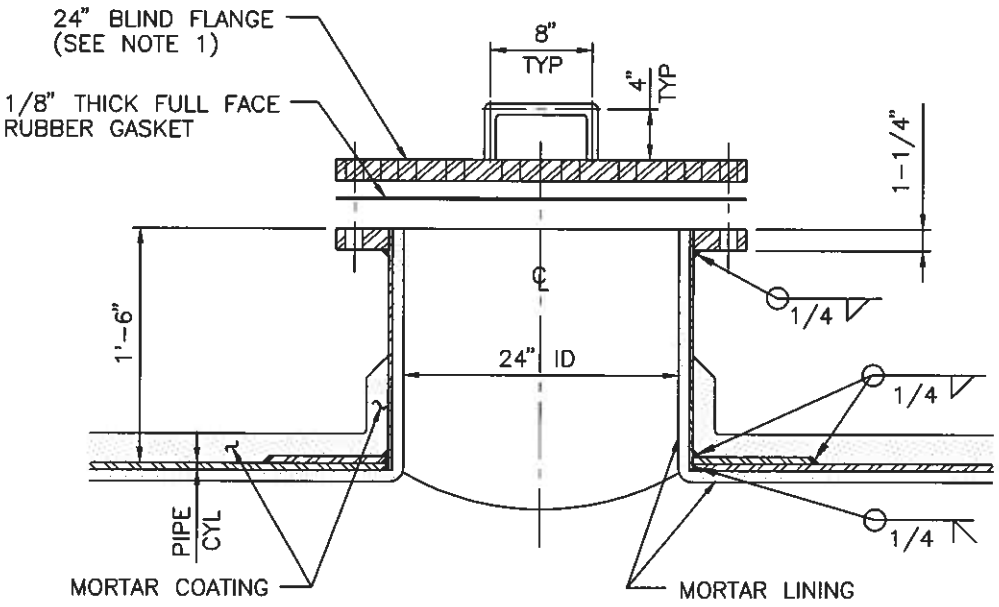

SECTION A

NOTES

1. STANDARD BLIND FLANGE CLASS "D" (1.657" THICK) PER AWWA C207-94.
2. SEE SPECS SEC 02511 FOR MORTAR LINED AND COATED STEEL PIPE

24-INCH PIPE ACCESS MANWAY

NOT TO SCALE PL08-2 012709

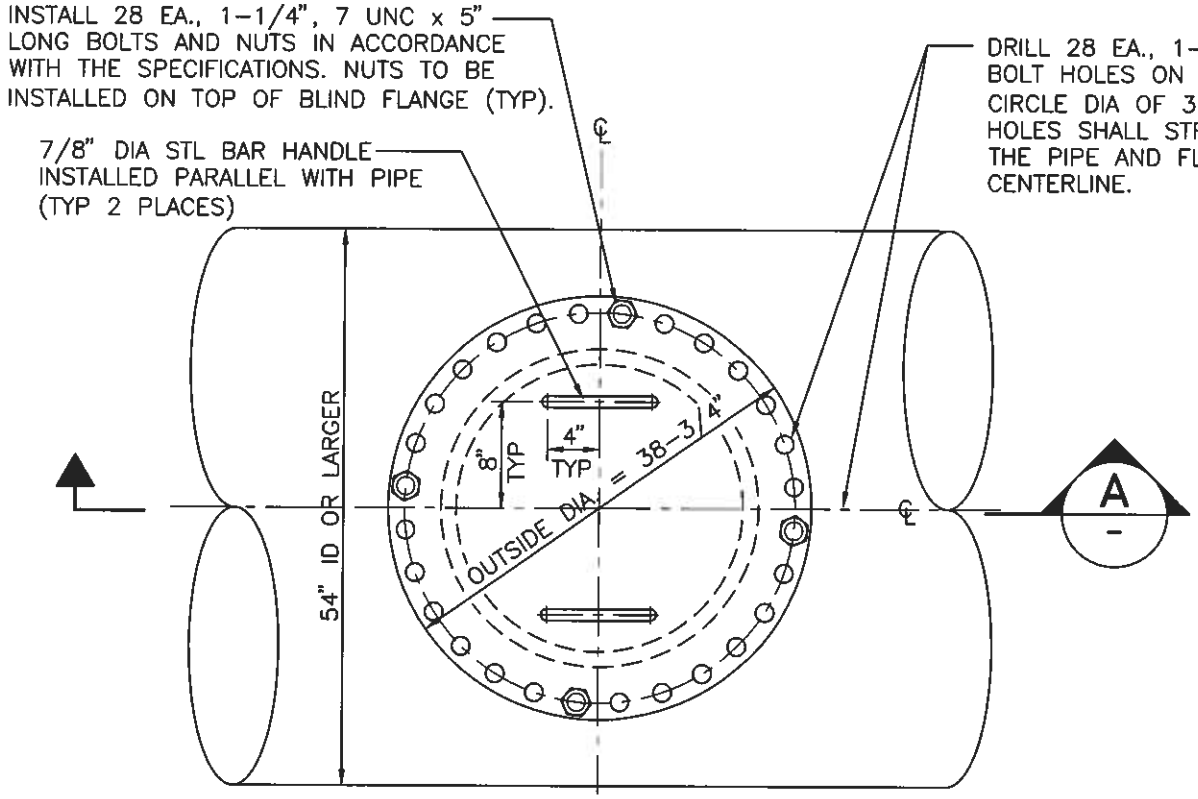

PLAN

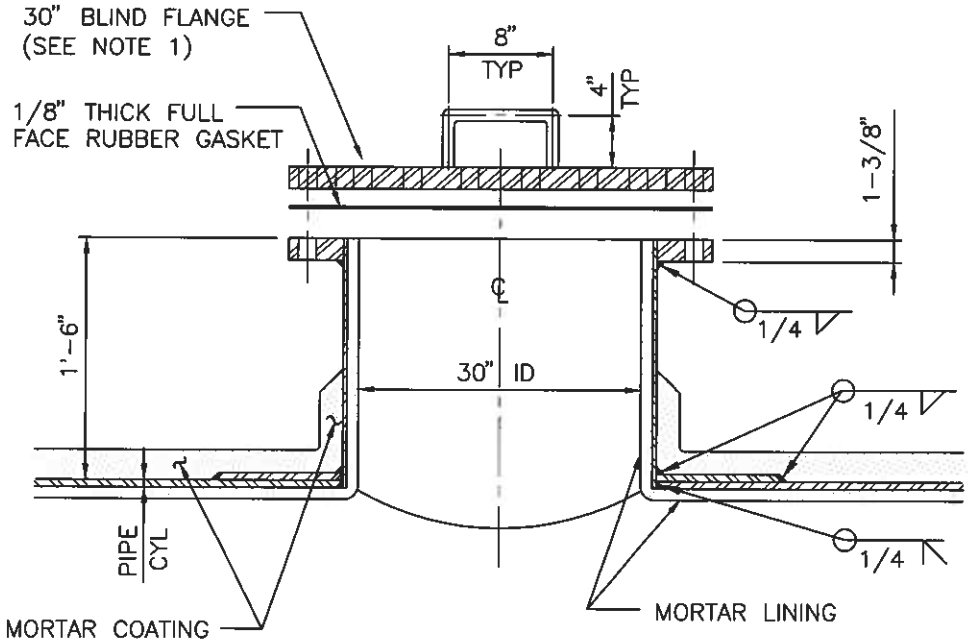

SECTION A

NOTES

1. STANDARD BLIND FLANGE CLASS "D" (2.003" THICK) PER AWWA C207-94.
2. SEE SPECS SEC 02511 FOR MORTAR LINED AND COATED STEEL PIPE

30-INCH PIPE ACCESS MANWAY

NOT TO SCALE PL08-2A 012709

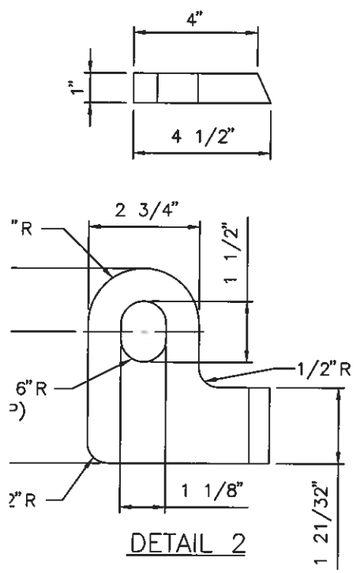

DETAIL 2

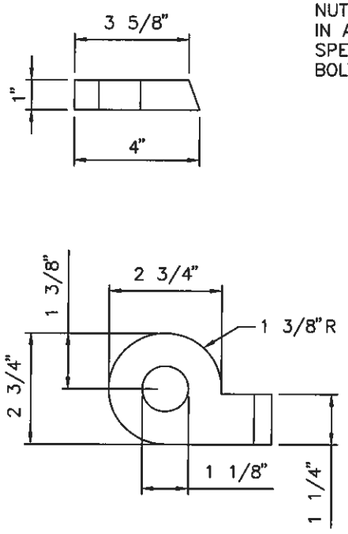

DETAIL 3

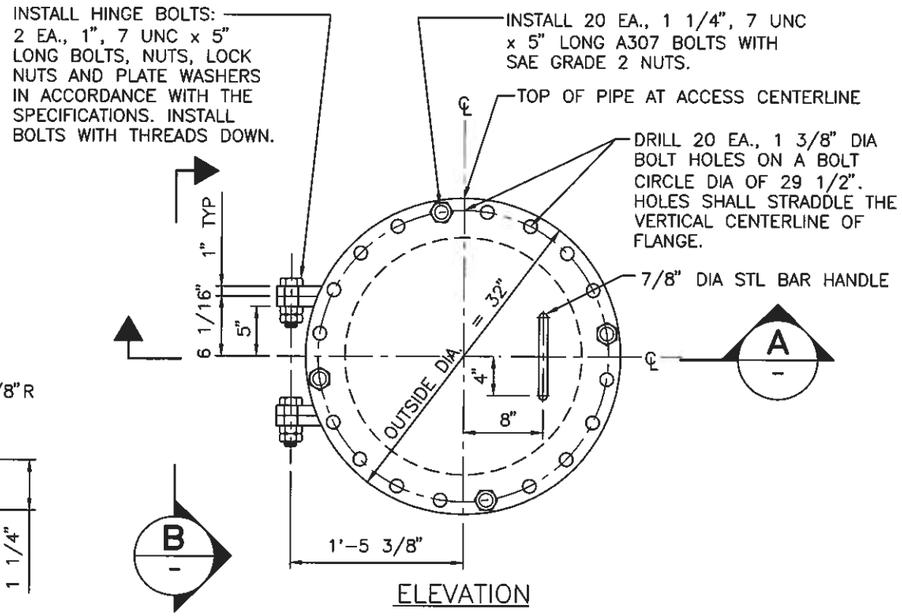

ELEVATION

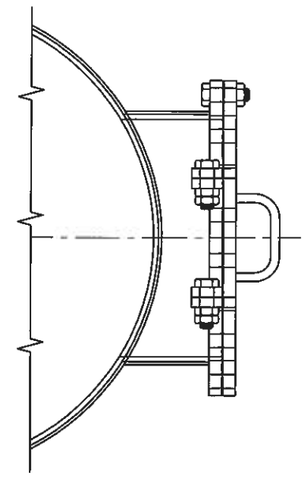

SECTION B

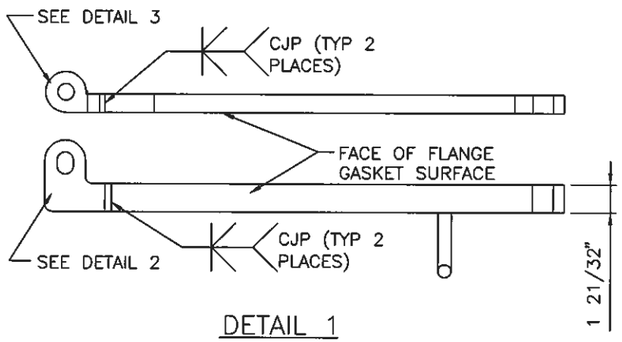

DETAIL 1

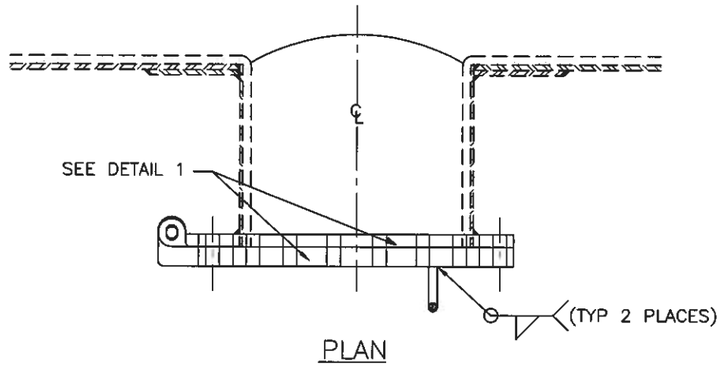

PLAN

NOTES

1. STANDARD BLIND FLANGE PER AWWA C207-94.
2. SEE SPECS SEC 02511 FOR MORTAR LINED AND COATED STEEL PIPE.

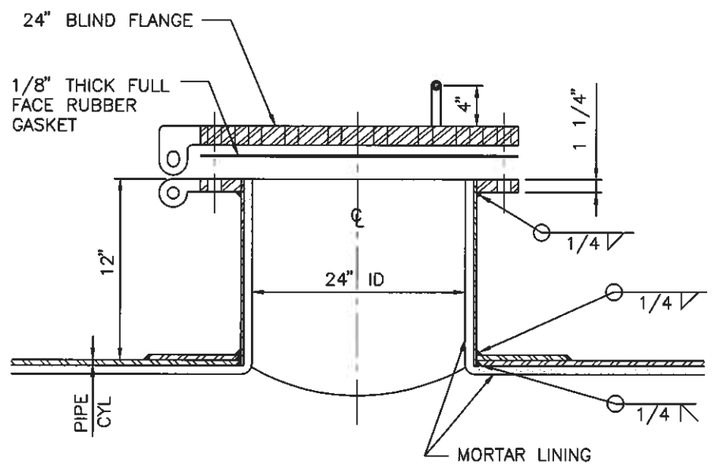

SECTION A

24-INCH VAULT ACCESS MANWAY

NOT TO SCALE PL08-3 012709

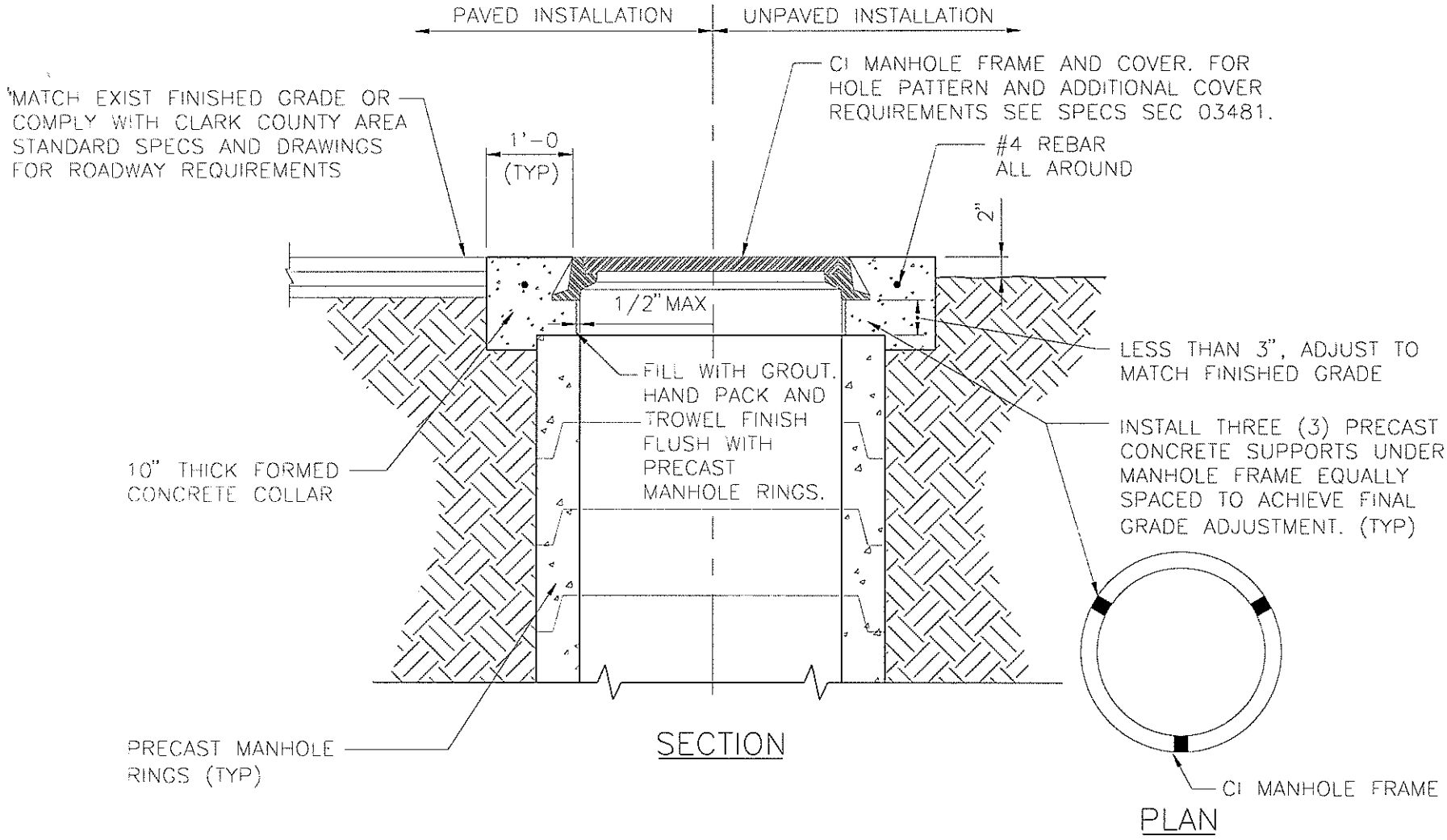

MANHOLE COVER AND COLLAR INSTALLATION

NOT TO SCALE PL08-4 062007

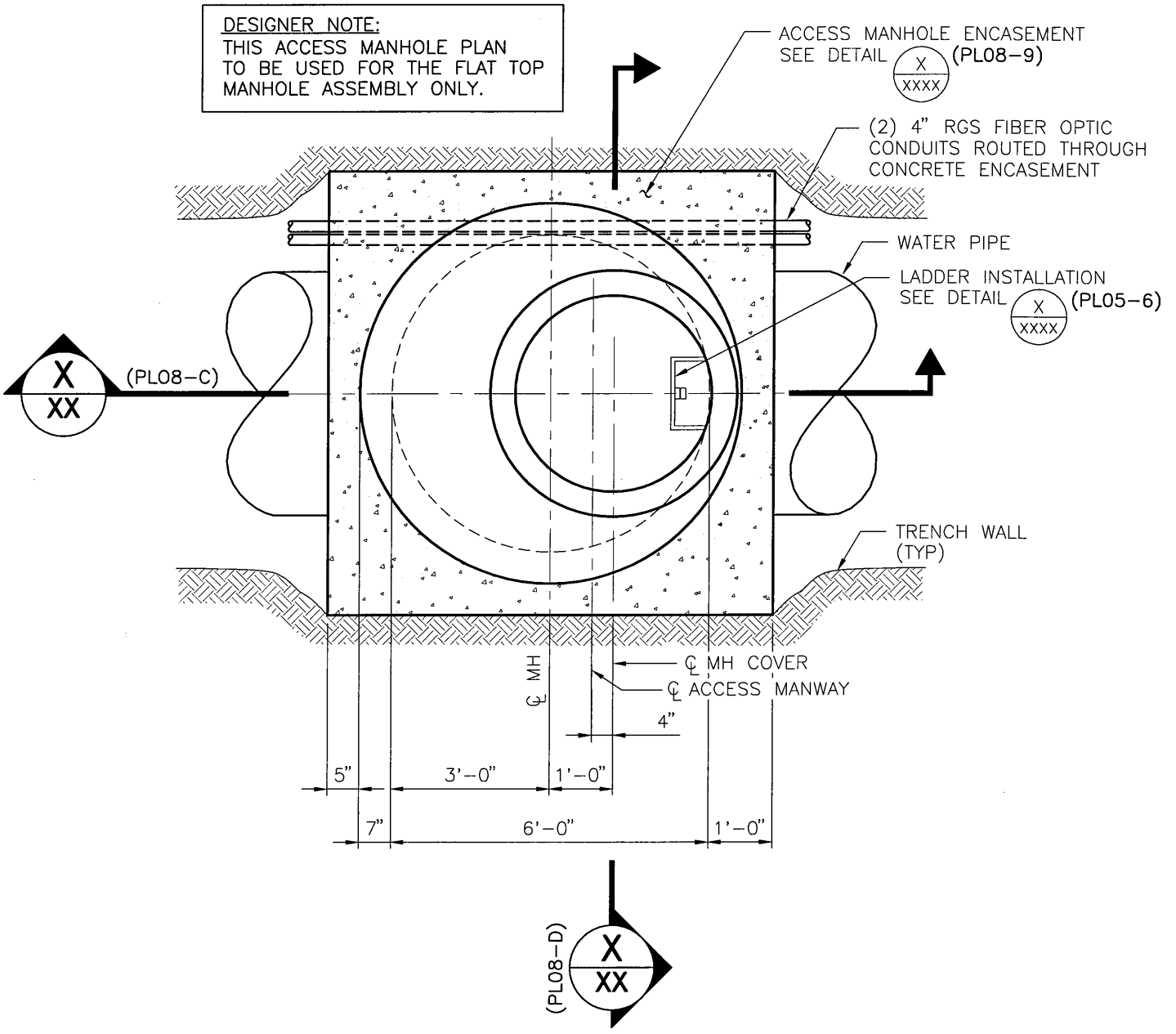

NOTE:
MH FRAME AND COVER AND MANWAY ARE BOTH SHOWN

ACCESS MANHOLE PLAN

NOT TO SCALE PL08-5 122603

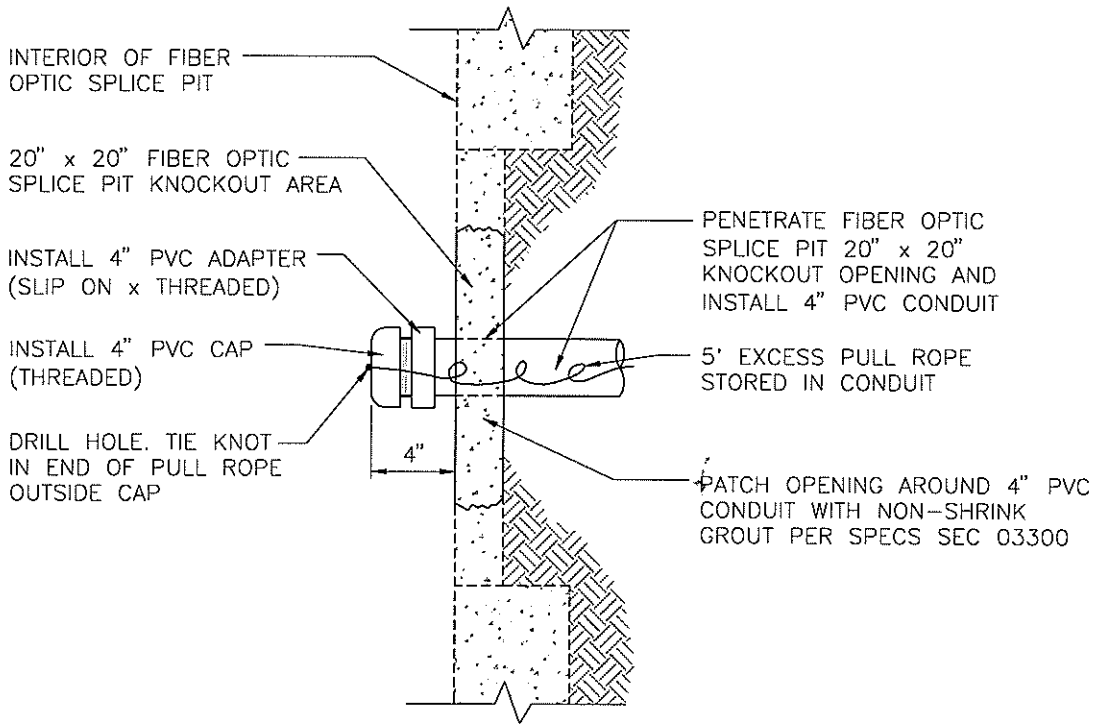

FIBER OPTIC SPLICE PIT PENETRATION DETAIL

NOT TO SCALE

PL08-6 070706

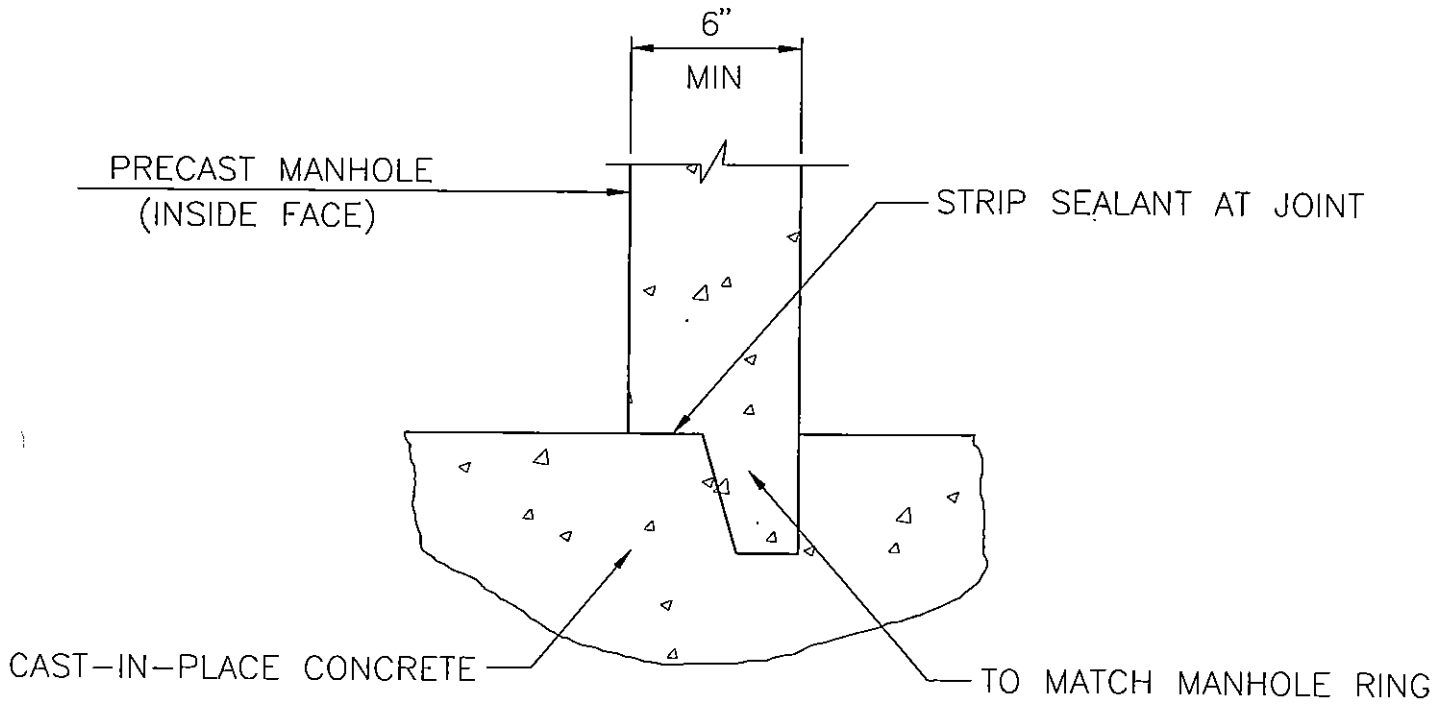

PRECAST TO CIP CONC BASE JT DETAIL

NOT TO SCALE

PL08-7 071003

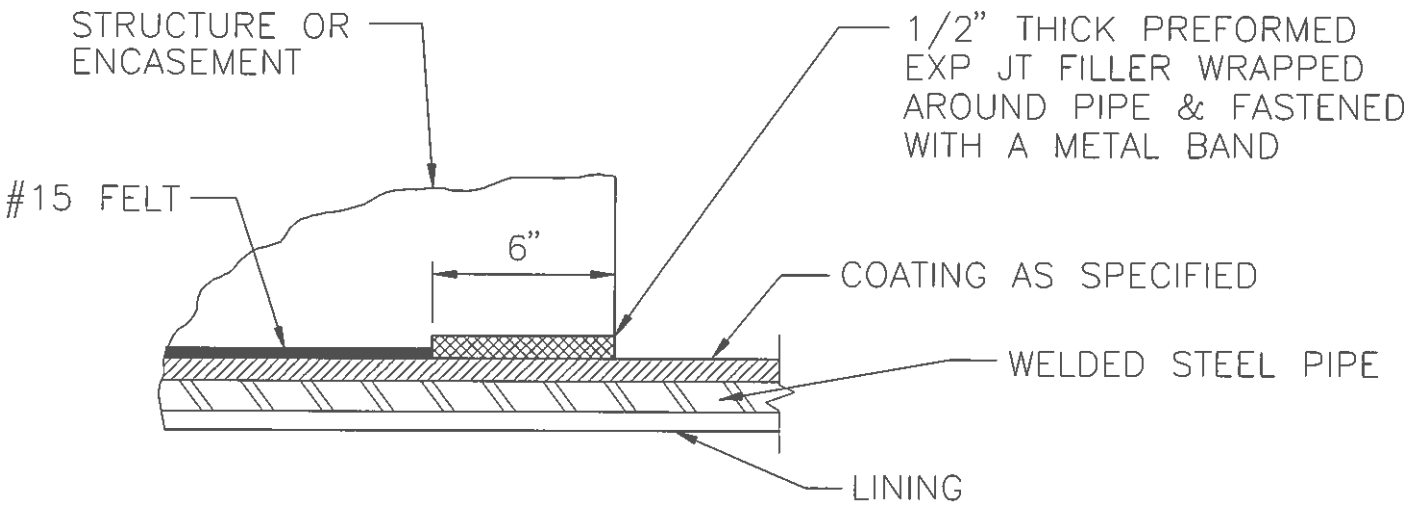

TYPICAL AT ENDS OF ACCESS MANHOLE STRUCTURES AND ENCASEMENTS

NOT TO SCALE

PL08-8 030308

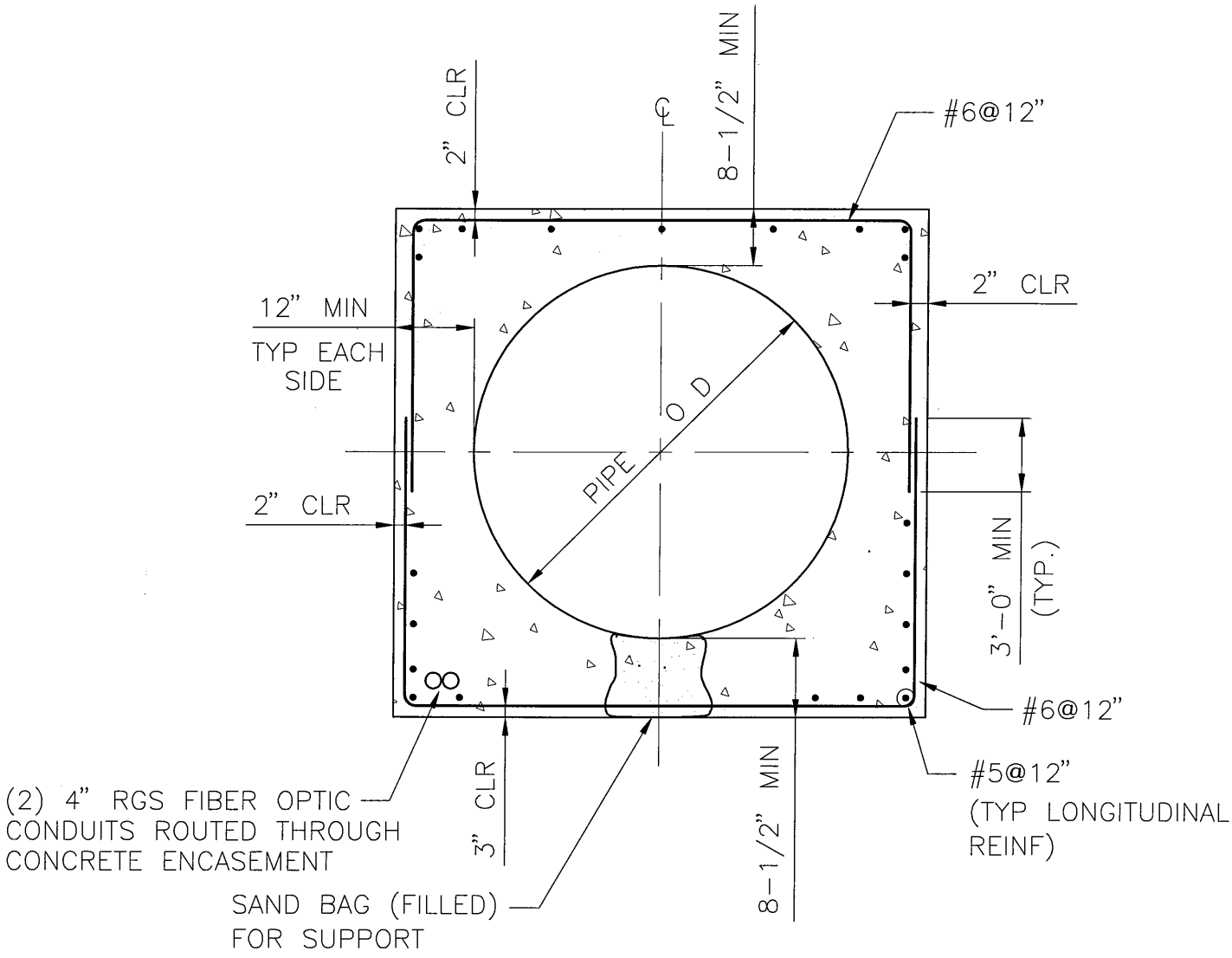

ACCESS MANHOLE ENCASEMENT

NOT TO SCALE PL08-9 122603

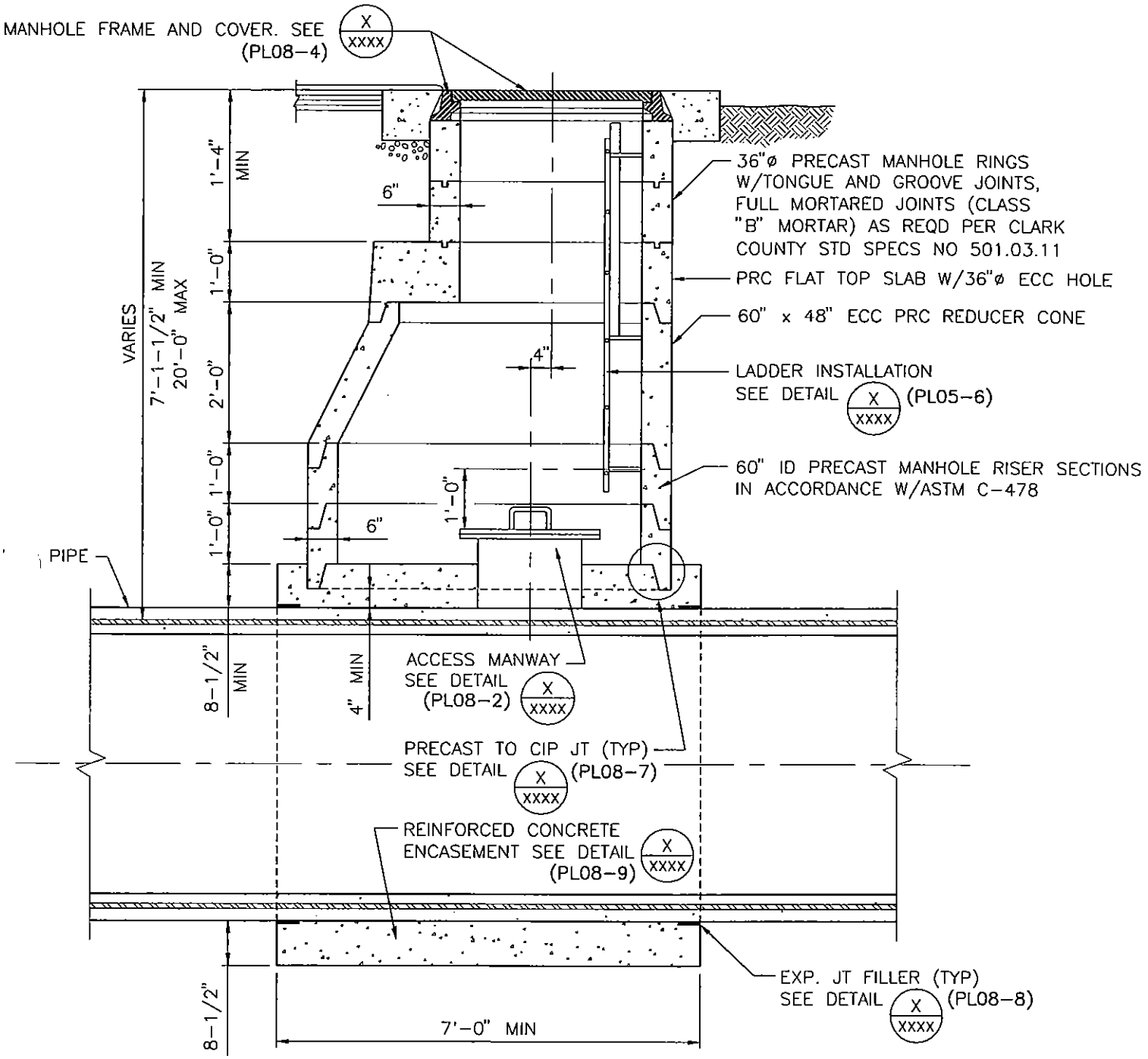

SECTION

NOT TO SCALE PL08-A 071003

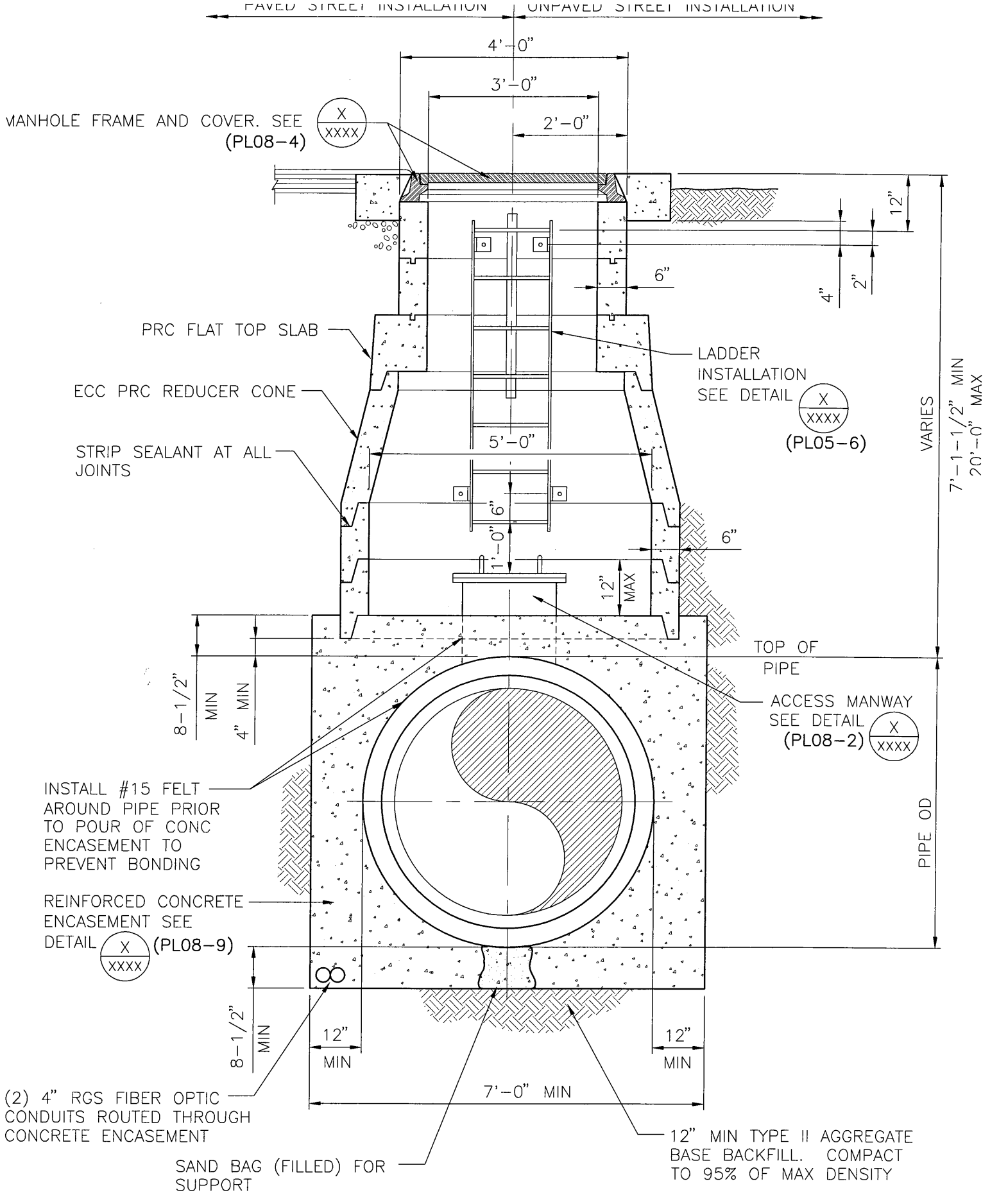

SECTION

NOT TO SCALE PL08-B 122603

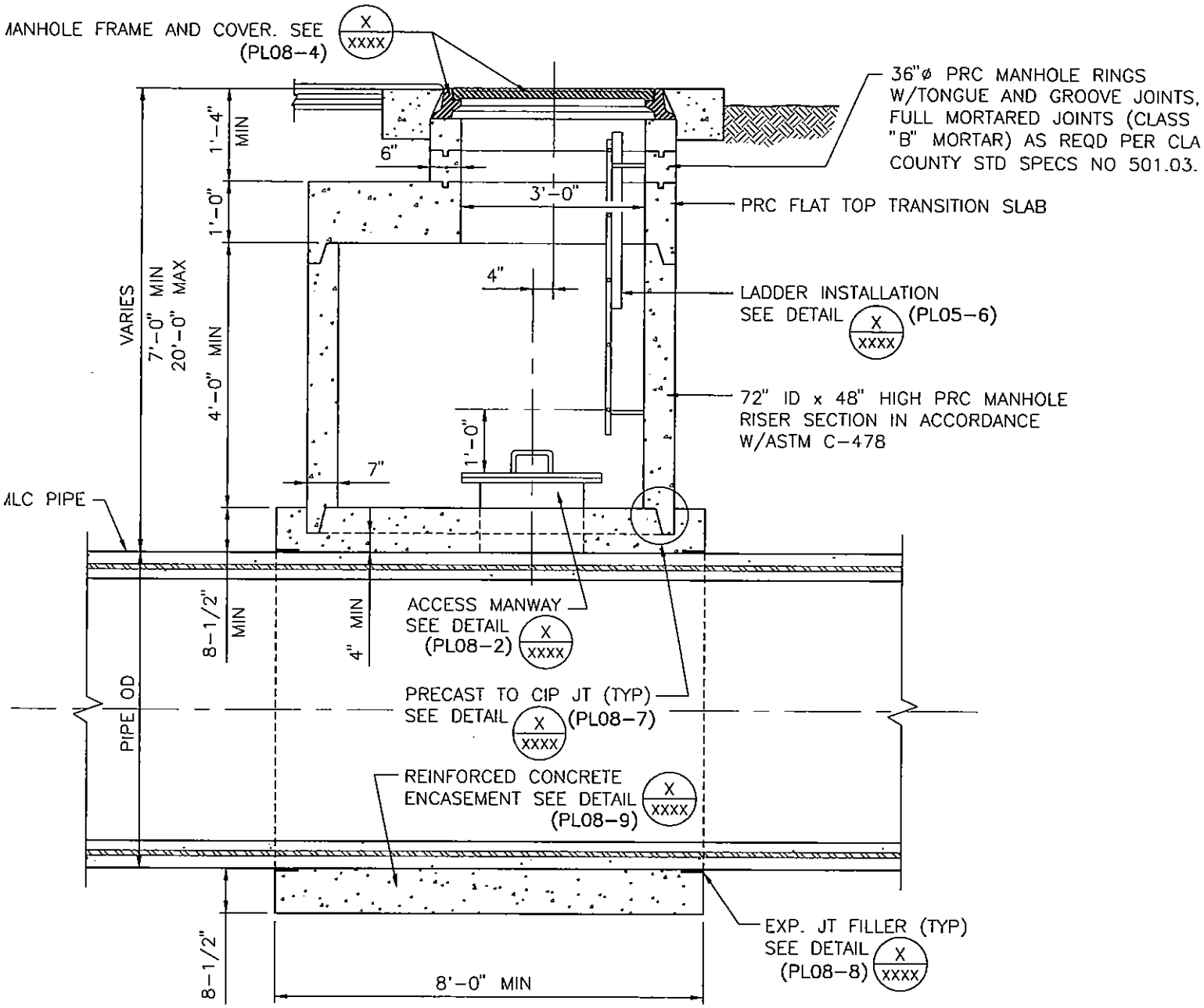

SECTION

NOT TO SCALE PL08-C 070703

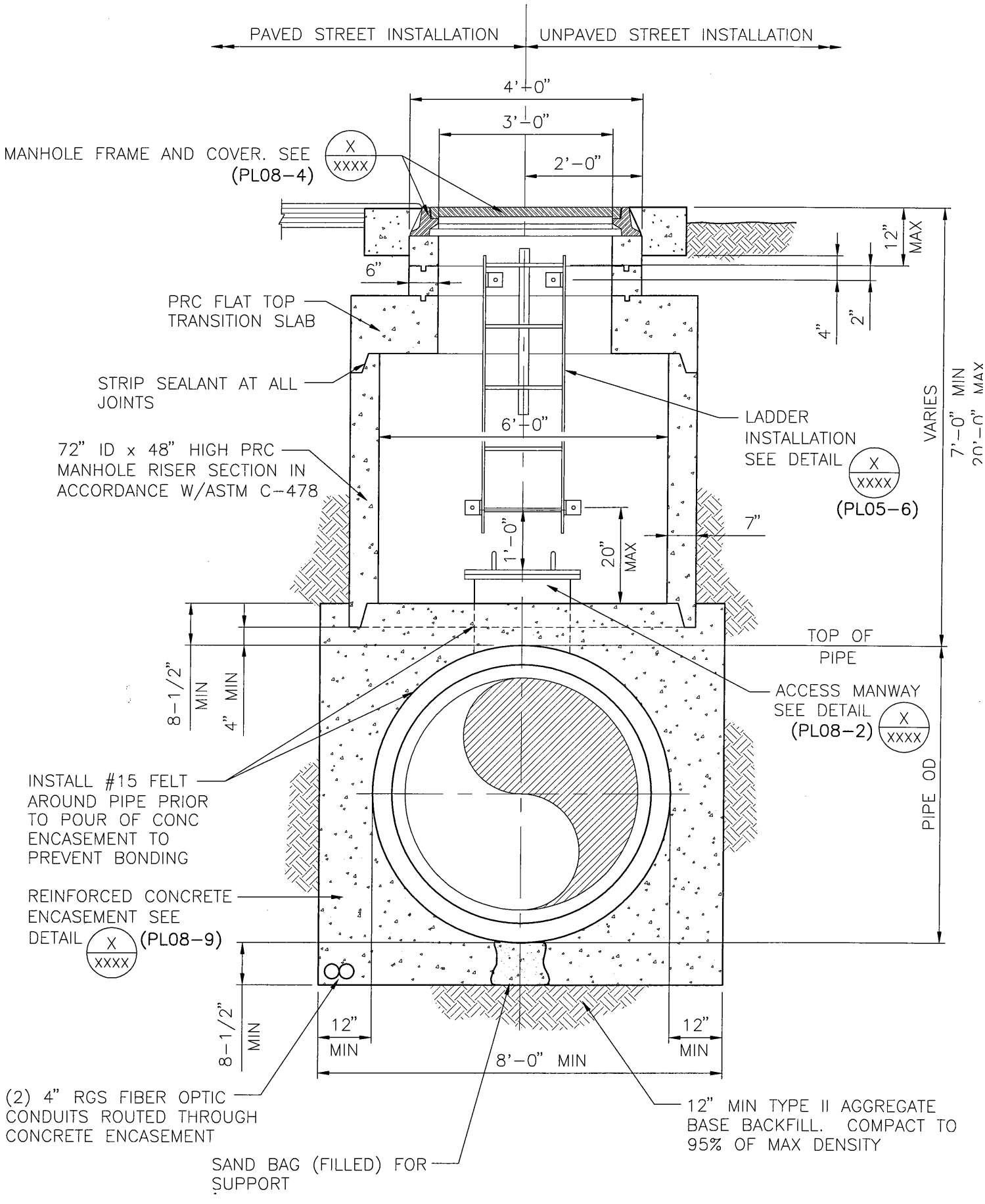

SECTION

NOT TO SCALE PL08-D 122603

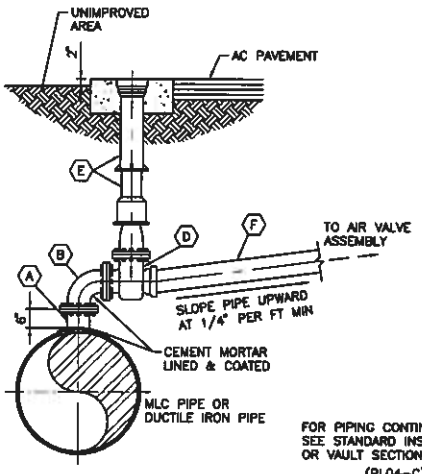

STANDARD INSTALLATION

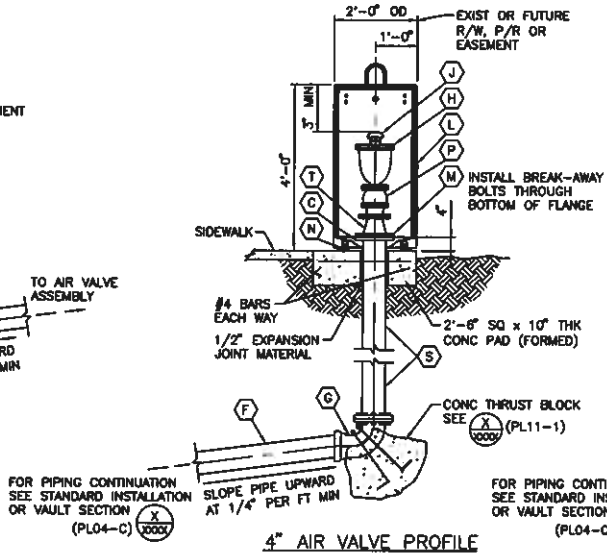

4" AIR VALVE PROFILE

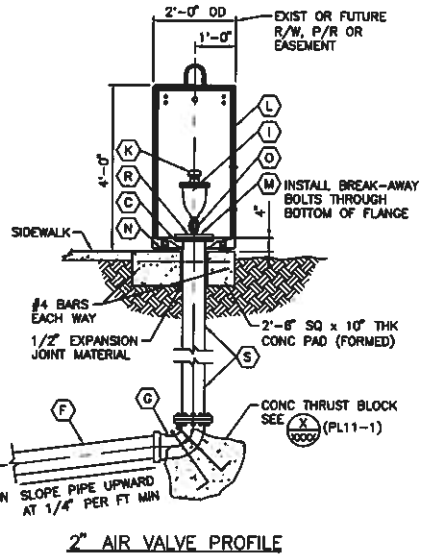

2" AIR VALVE PROFILE

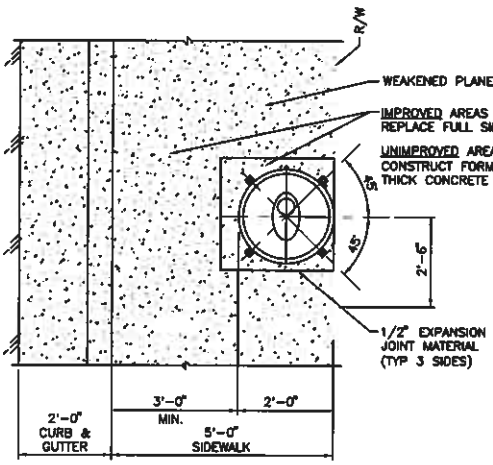

PLAN VIEW

LEGEND

- (A) 6" FLG STL OUTLET FOR MLC STLPIPE, FLG TEE FOR DIP
- (B) 6"– 90° FLG DUCTILE IRON BEND
- (C) 6" DUCTILE IRON FLANGE ADAPTOR
- (D) 6" FLG x PO OR FLG x MJ GATE VALVE W/2" OPERATING NUT
- (E) VALVE BOX AND COVER – SEE DETAIL (X XXXX) (PL10–8)
- (F) 6" DUCTILE IRON PC350 PIPE OR 6" PVC CL150 DR18 PIPE
- (G) 6" – 90° FLG x PO OR FLG x MJ DI BEND
- (H) 4" AIR VALVE, FLANGED INLET
- (I) 2" AIR VALVE, THREADED INLET
- (J) 4" MUSHROOM VENT CAP
- (K) 2" MUSHROOM VENT CAP
- (L) 2'–0" OD x 4'–0" HIGH STEEL COVER
- (M) 5/8"–11NC BREAK–AWAY ZINC PLATED HEX HD BOLT, HEX NUT AND LOCKWASHER
- (N) 1/2"ø x 8" ANCHOR BOLT
- (O) 2" CORP STOP, THREADED BOTH ENDS
- (P) 4" BALL VALVE – QUARTER TURN
- (R) 6" x 2" THREADED STL REDUCING FLANGE
- (S) 6" DUCTILE IRON PC350 PIPE
- (T) 6" x 4" FLG x FLG DI REDUCER

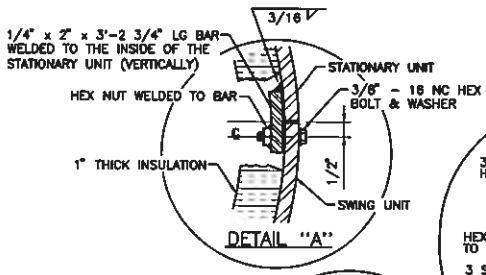

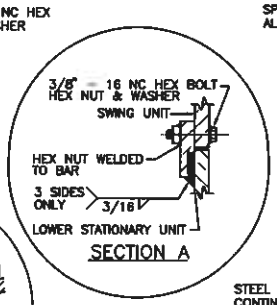

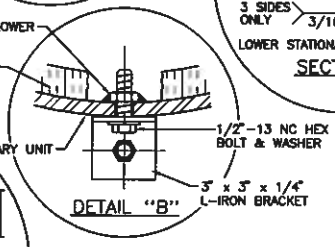

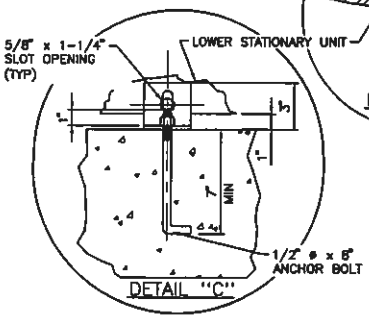

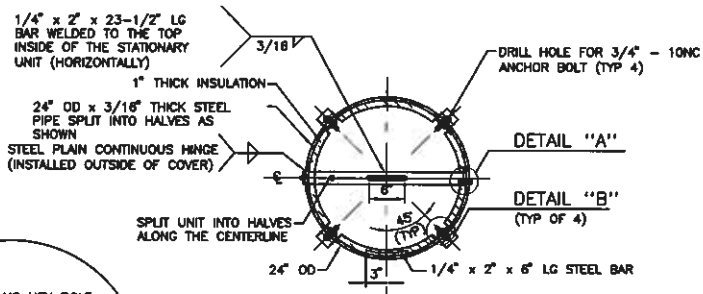

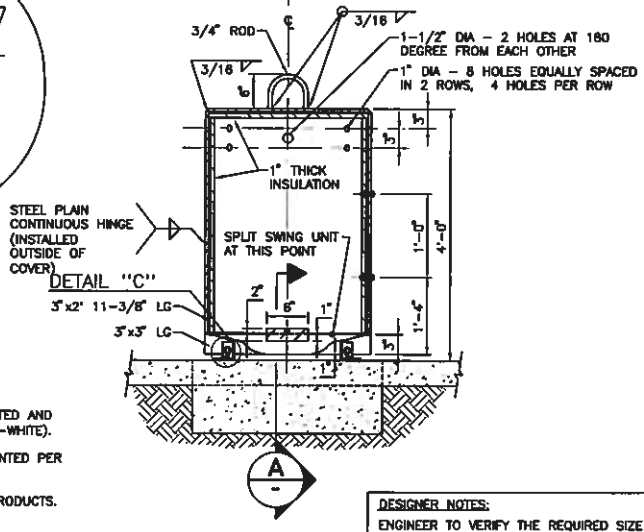

NOTES:

1. EXPOSED AIR VALVE ASSEMBLY TO BE COATED AND PAINTED PER SPECS SEC 09965, (COLOR –WHITE).
2. STEEL ENCLOSURE TO BE COATED AND PAINTED PER SPECS SEC 09965, (COLOR –BEIGE).
3. SEE SPECIFICATIONS FOR ALL APPROVED PRODUCTS.

DESIGNER NOTES:

ENGINEER TO VERIFY THE REQUIRED SIZE AND TYPE OF AIR VALVE ASSEMBLY PER PROJECT REQUIREMENTS.

USE ONLY THE APPROPRIATE DRAWING(S) AND DESCRIPTIONS FOR CORRECT SIZE OF AIR VALVE ASSEMBLY.

AIR VALVE ASSEMBLY FOR 2" AND 4" VALVES (STEEL ENCLOSURE)

NOT TO SCALE PL09–1 070208

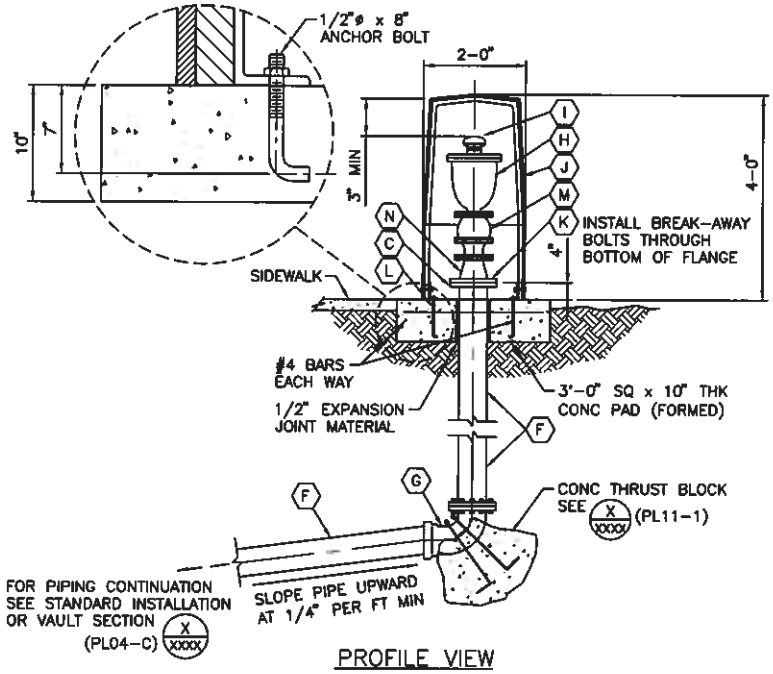

PROFILE VIEW

LEGEND

- (A) 6" FLG STL OUTLET FOR MLC STL PIPE, FLG TEE FOR DIP
- (B) 6" – 90° FLG DUCTILE IRON BEND
- (C) 6" DUCTILE IRON FLANGE ADAPTOR
- (D) 6" FLG x PO OR FLG x MJ GATE VALVE W/2" OPERATING NUT
- (E) VALVE BOX AND COVER – SEE DETAIL X XXXX (PL10-8)
- (F) 6" DUCTILE IRON PC350 PIPE OR 6" PVC CL150 DR18 PIPE
- (G) 6" – 90° FLG x PO OR FLG x MJ DI BEND
- (H) 4" AIR VALVE, FLANGED INLET
- (I) 4" MUSHROOM VENT CAP
- (J) APPROVED ENCLOSURE
- (K) 5/8"-11NC BREAK-AWAY ZINC PLATED HEX HD BOLT, HEX NUT AND LOCKWASHER
- (L) 1/2"ø x 8" ANCHOR BOLT
- (M) 4" BALL VALVE– QUARTER TURN
- (N) 6" x 4" FLG x FLG DI REDUCER

NOTE SEE SPECIFICATIONS FOR ALL APPROVED PRODUCTS

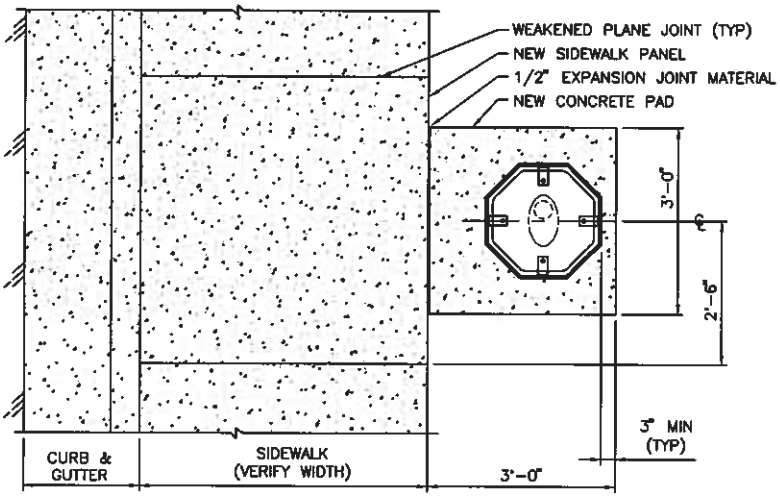

PLAN VIEW

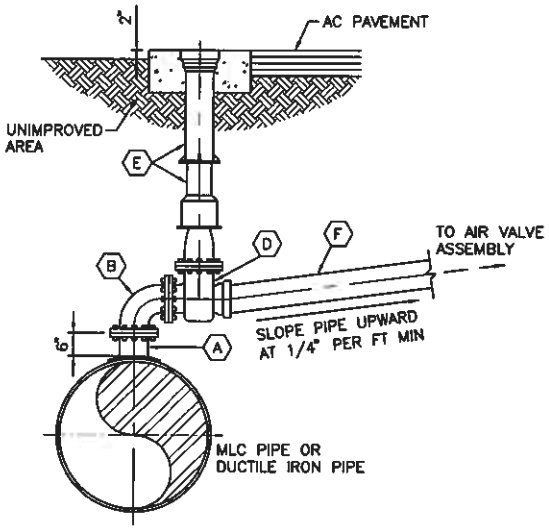

STANDARD INSTALLATION

DESIGNER NOTE:
ENGINEER TO VERIFY THE REQUIRED SIZE AND TYPE OF AIR VALVE ASSEMBLY PER PROJECT REQUIREMENTS.

AIR VALVE ASSEMBLY FOR 4" VALVES

NOT TO SCALE PL09-1A 070208

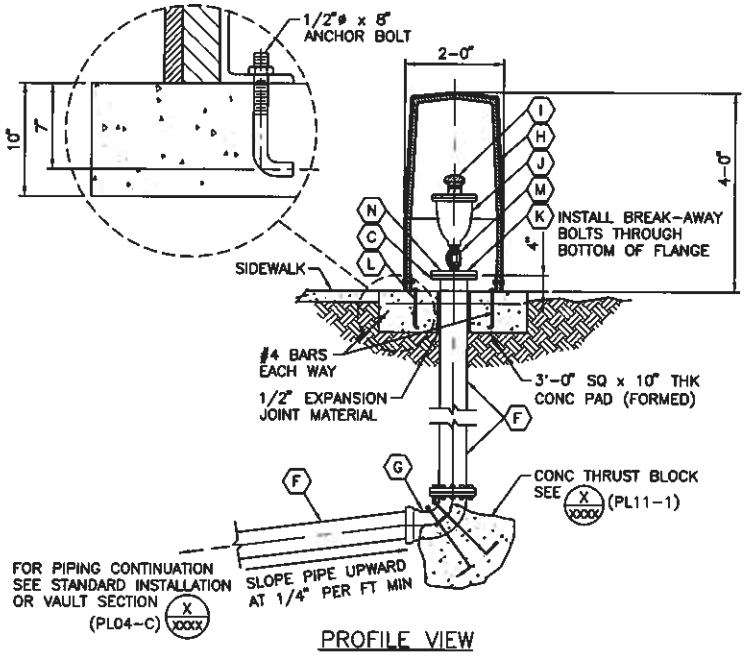

PROFILE VIEW

LEGEND

- (A) 6" FLG STL OUTLET FOR MLC STL PIPE, FLG TEE FOR DIP
- (B) 6" – 90° FLG DUCTILE IRON BEND
- (C) 6" DUCTILE IRON FLANGE ADAPTOR
- (D) 6" FLG x PO OR FLG x MJ GATE VALVE W/2" OPERATING NUT
- (E) VALVE BOX AND COVER – SEE DETAIL X XXXX (PL10-8)
- (F) 6" DUCTILE IRON PC350 PIPE OR 6" PVC CL150 DR18 PIPE
- (G) 6" – 90° FLG x PO OR FLG x MJ DI BEND
- (H) 2" AIR VALVE, THREADED INLET
- (I) 2" MUSHROOM VENT CAP
- (J) APPROVED ENCLOSURE
- (K) 5/8"–11NC BREAK-AWAY ZINC PLATED HEX HD BOLT, HEX NUT AND LOCKWASHER
- (L) 1/2"ø x 8" ANCHOR BOLT
- (M) 2" CORP STOP, THREADED BOTH ENDS
- (N) 6" x 2" THREADED STL REDUCING FLANGE

NOTE SEE SPECIFICATIONS FOR ALL APPROVED PRODUCTS

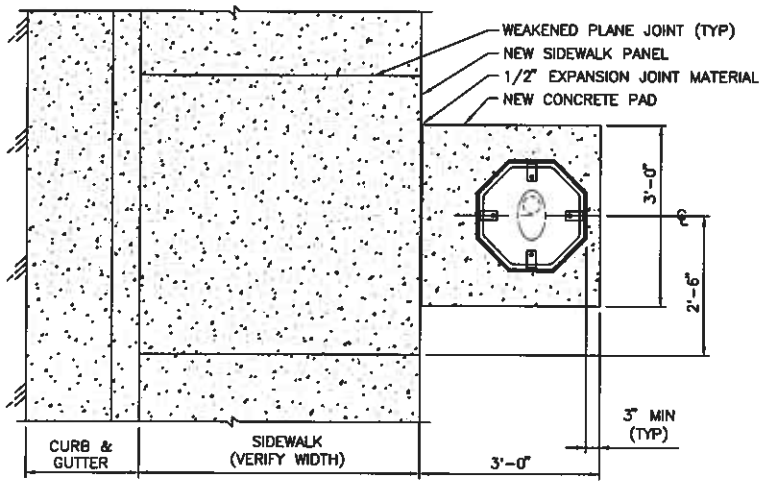

PLAN VIEW

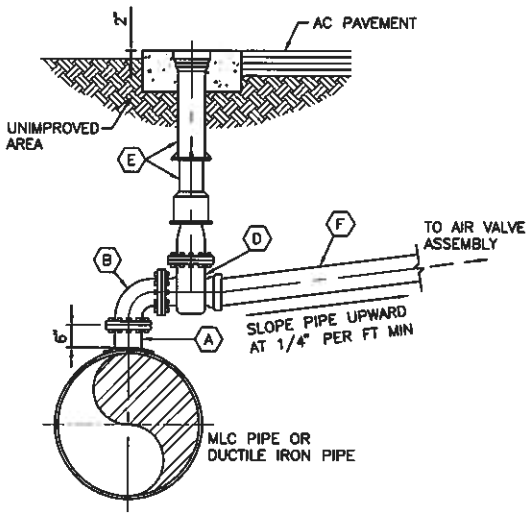

STANDARD INSTALLATION

DESIGNER NOTE:
ENGINEER TO VERIFY THE REQUIRED SIZE AND TYPE OF AIR VALVE ASSEMBLY PER PROJECT REQUIREMENTS.

AIR VALVE ASSEMBLY FOR 2" VALVES

NOT TO SCALE PL09-1B 070208

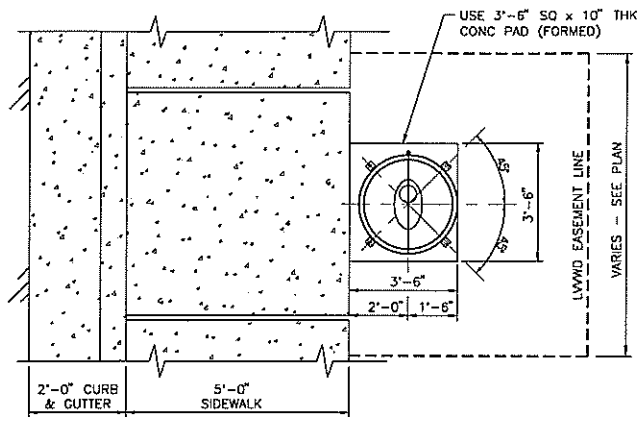

PLAN VIEW

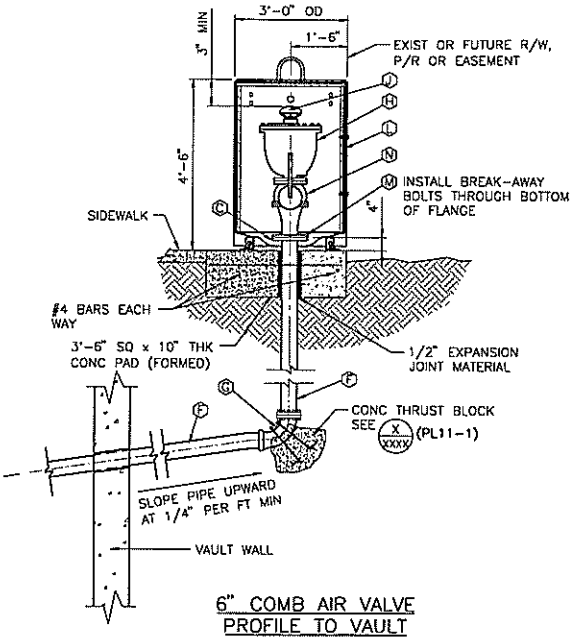

6" COMB AIR VALVE PROFILE TO VAULT

NOTES

IN IMPROVED AREAS CONTRACTOR TO REPLACE FULL SIDEWALK PANEL.

IN UNIMPROVED AREAS CONTRACTOR TO CONSTRUCT FORMED 3'-6" SQ x 10" THICK CONCRETE SLAB.

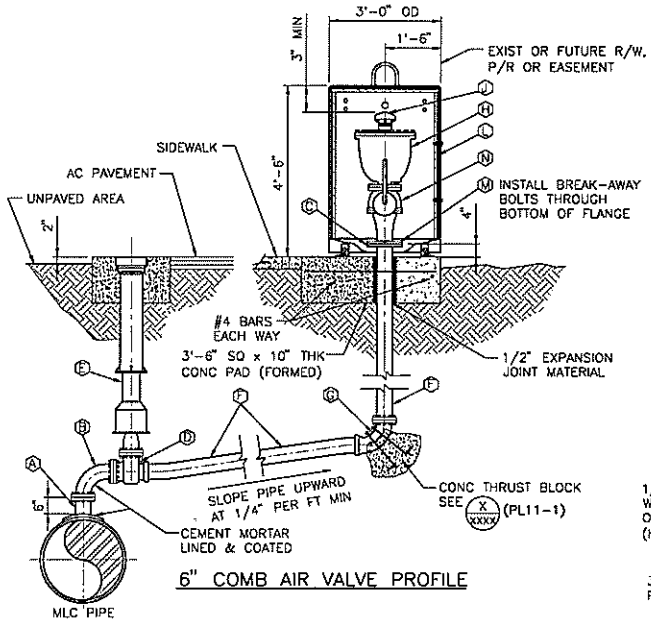

6" COMB AIR VALVE PROFILE

LEGEND

- (A) 6" FLG STL OUTLET FOR MLC STL PIPE, FLG TEE FOR DIP
- (B) 6" - 90° FLG DUCTILE IRON BEND
- (C) 6" DUCTILE IRON FLANGE ADAPTOR
- (D) 6" FLG x PO OR FLG x MJ GATE VALVE W/2" OPERATING NUT
- (E) VALVE BOX & COVER - SEE DETAIL X XXXX (PL10-8)
- (F) 6" DUCTILE IRON PC350 OR 6" PVC CL150 DR18 PIPE
- (G) 6" - 90° FLG x PO OR FLG x MJ CI BEND
- (H) 6" AIR VALVE, FLANGED INLET
- (J) 6" MUSHROOM VENT CAP
- (L) 3'-0" OD x 4'-6" HIGH STEEL COVER
- (M) 5/8"-11NC BREAK-AWAY ZINC PLATED HEX HD BOLT, HEX NUT AND LOCKWASHER
- (N) 6" BALL VALVE - QUARTER TURN

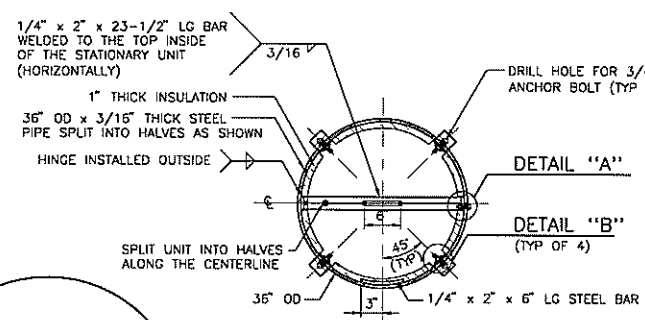

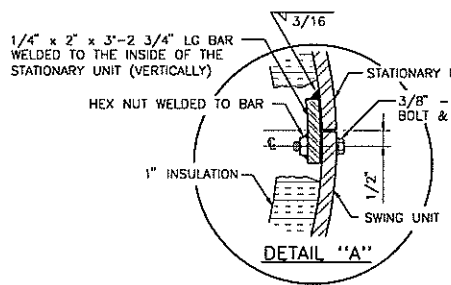

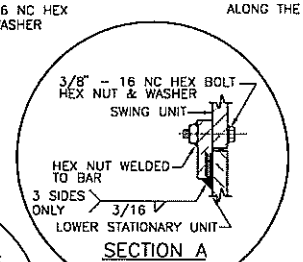

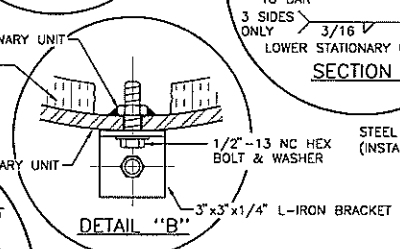

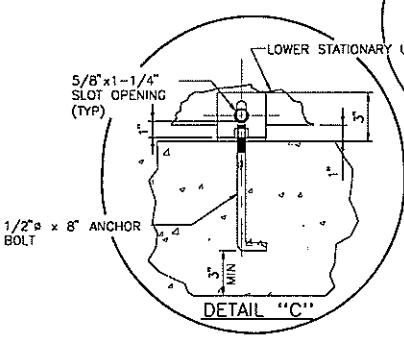

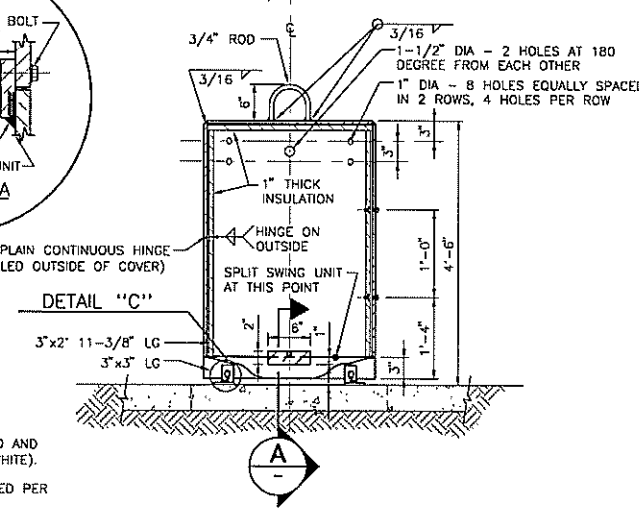

NOTES:

1. EXPOSED AIR VALVE ASSEMBLY TO BE COATED AND PAINTED PER SPECS SEC 09965, (COLOR -WHITE).
2. STEEL ENCLOSURE TO BE COATED AND PAINTED PER SPECS SEC 09965, (COLOR -BEIGE).
3. SEE SPECIFICATIONS FOR ALL APPROVED PRODUCTS.

AIR VALVE ASSEMBLY FOR 6-INCH VALVES

NOT TO SCALE PL09-1C 030206

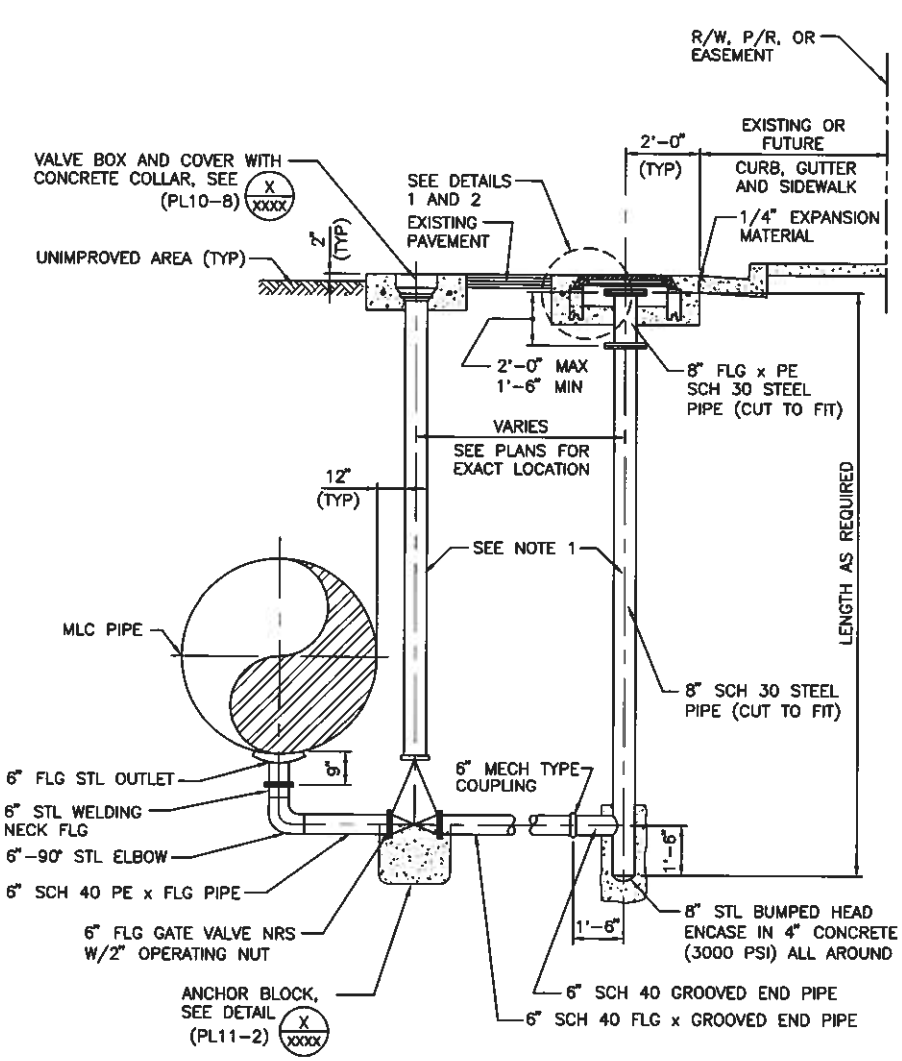

BLOW-OFF ASSEMBLY

NOTES

1. IN ORDER TO AVOID UNDUE STRESS ON THE VALVE BOX, VALVE AND BLOW-OFF ASSEMBLY THEY MUST BE PROPERLY SUPPORTED UNTIL THE BACKFILL OPERATION IS COMPLETED.
2. ALL 6" AND 8" STEEL PIPES AND FITTINGS SHALL HAVE CEMENT MORTAR LINING AND COATING.
3. ALL EXPOSED FERROUS SURFACES TO BE COATED IN ACCORDANCE WITH SPECS SEC 03481 AND 09965.

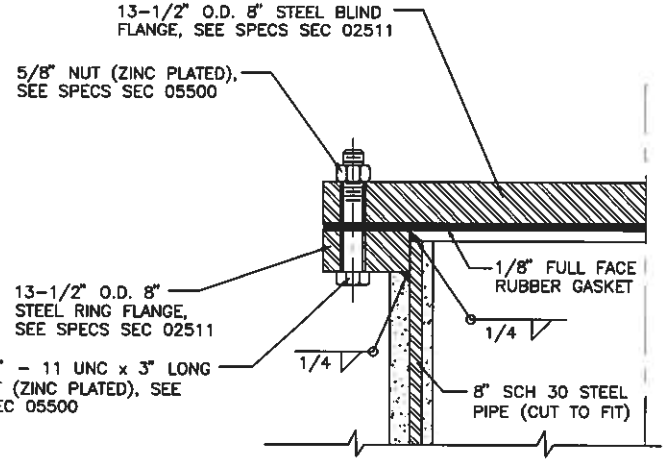

DETAIL 1

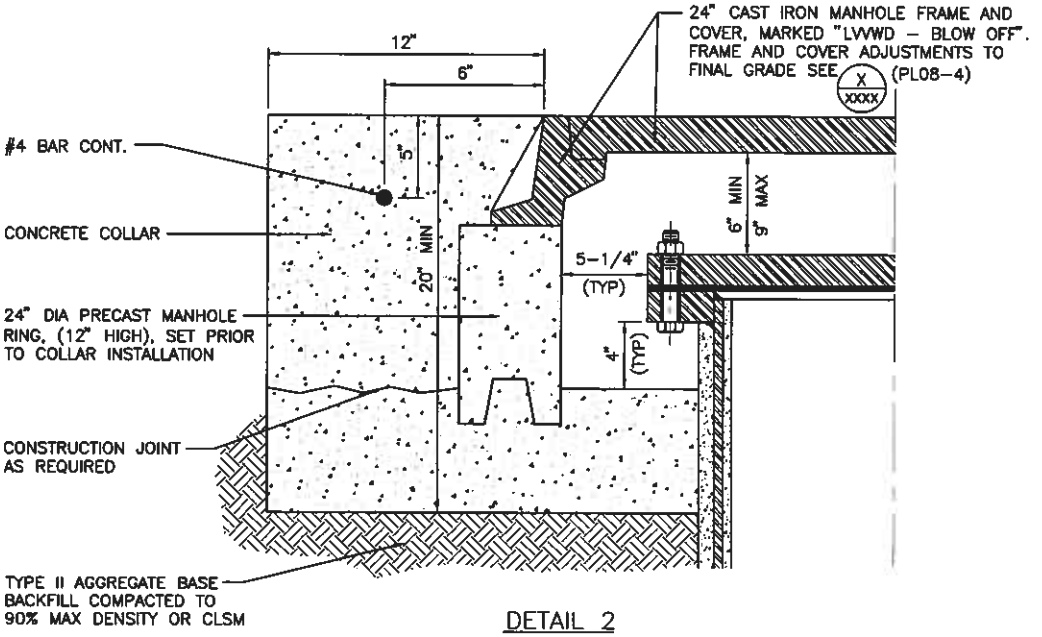

DETAIL 2

BLOW-OFF ASSEMBLY AND COVER DETAIL

NOT TO SCALE PL09-2 091008

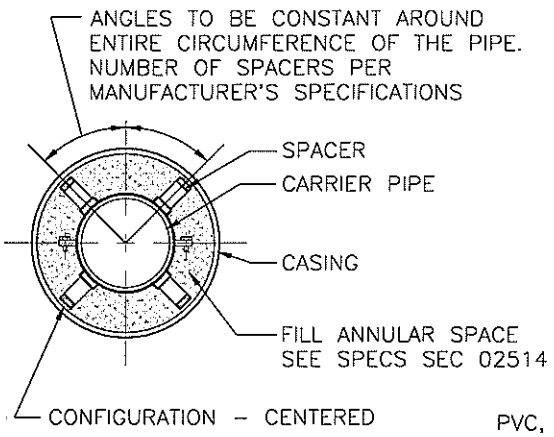

CROSS–SECTION

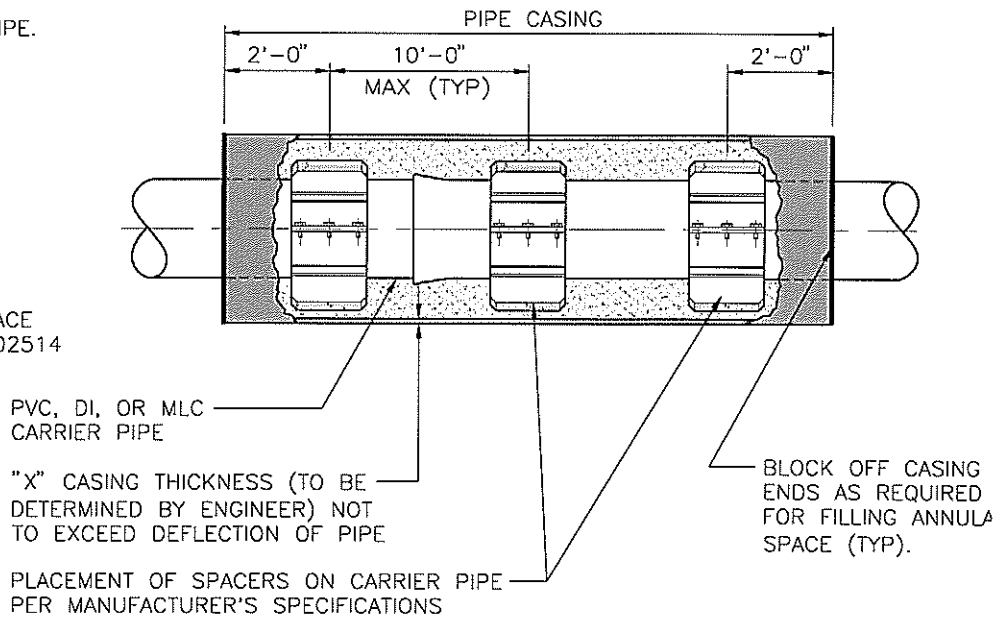

DI CARRIER PIPE	
8" SPACER WIDTH	
PIPE SIZE	CASING ID
12"	24"
16"	30"
18"	30"
20"	36"
24"	42"
30"	48"
36"	54"

MLC CARRIER PIPE			
8" SPACER WIDTH		12" SPACER WIDTH	
PIPE SIZE	CASING ID	PIPE SIZE	CASING ID
24"	42"	42"	60"
30"	48"	48"	66"
36"	54"	54"	72"
		60"	78"
		66"	84"
		72"	90"

NOTES:

1. MLC PIPE JOINTS INSIDE PIPE CASING TO BE WELDED. PVC AND DI PIPE JOINTS INSIDE PIPE CASING TO BE RESTRAINED (TYP).
2. INTERIOR OF CASING TO BE GROUND SMOOTH AND LUBRICATED FOR SPACER INSTALLATION.
3. ALL CONDUITS AND FITTINGS INSTALLED WITHIN CASING IN ACCORDANCE WITH SPECS SEC 16134.
4. ENTIRE PIPE CASING TO BE INSTALLED LEVEL (6"±) UNLESS OTHERWISE SHOWN ON DRAWINGS. SEE SPECS SEC 02514 FOR FURTHER REQUIREMENTS.

CASING ASSEMBLY DETAIL

NOT TO SCALE PL09–3 030506

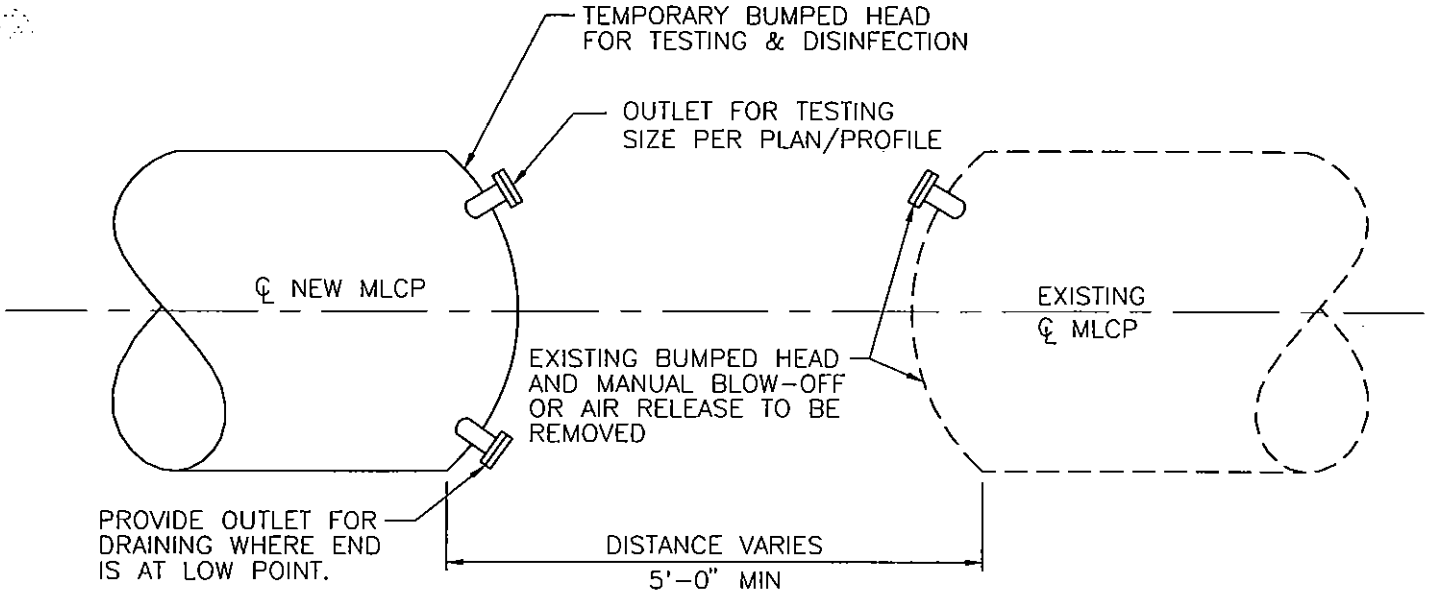

PROFILE BEFORE CONNECTION

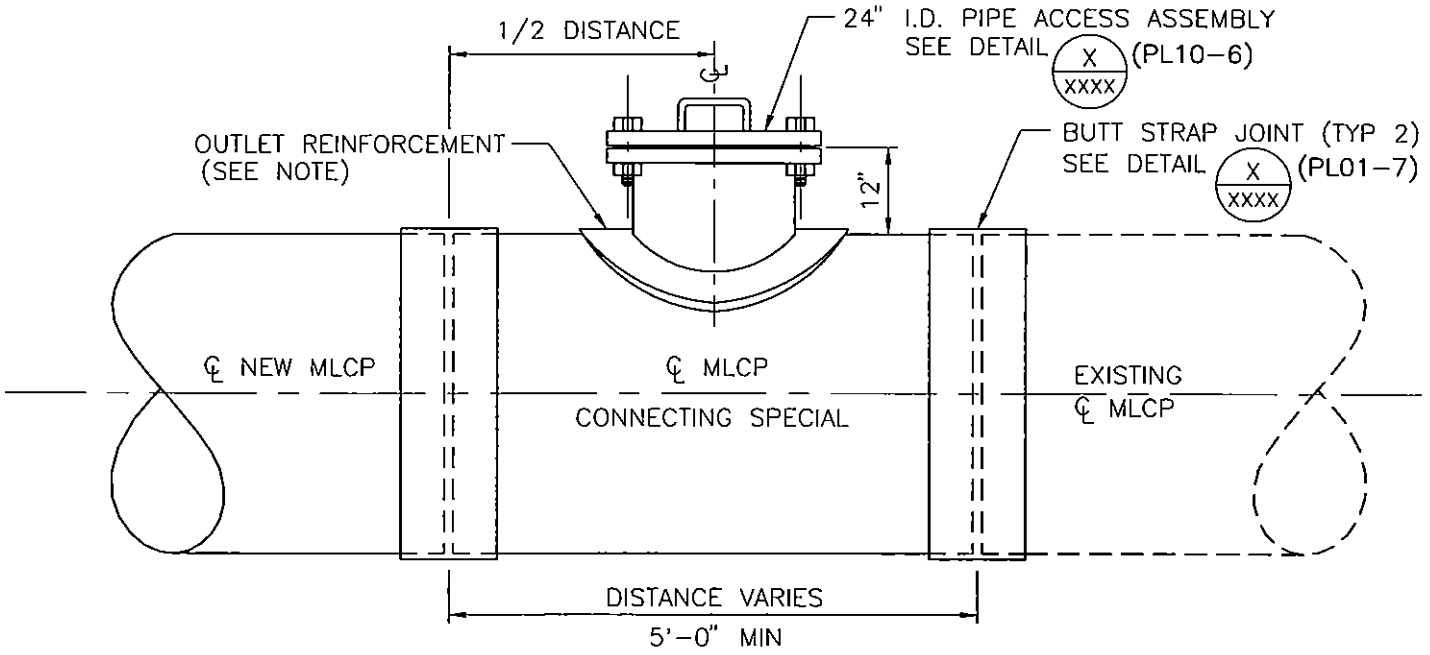

PROFILE AFTER CONNECTION

NOTE

1. OUTLET REINFORCEMENT SHALL BE DETERMINED PER AWWA M11 DESIGN METHOD.
2. SEE SPECS SEC 02511 FOR MORTAR LINED AND COATED STEEL PIPE

CONNECTION OF NEW PIPE TO EXISTING PIPE FOR MLCP ONLY

NOT TO SCALE PL10-1 070703

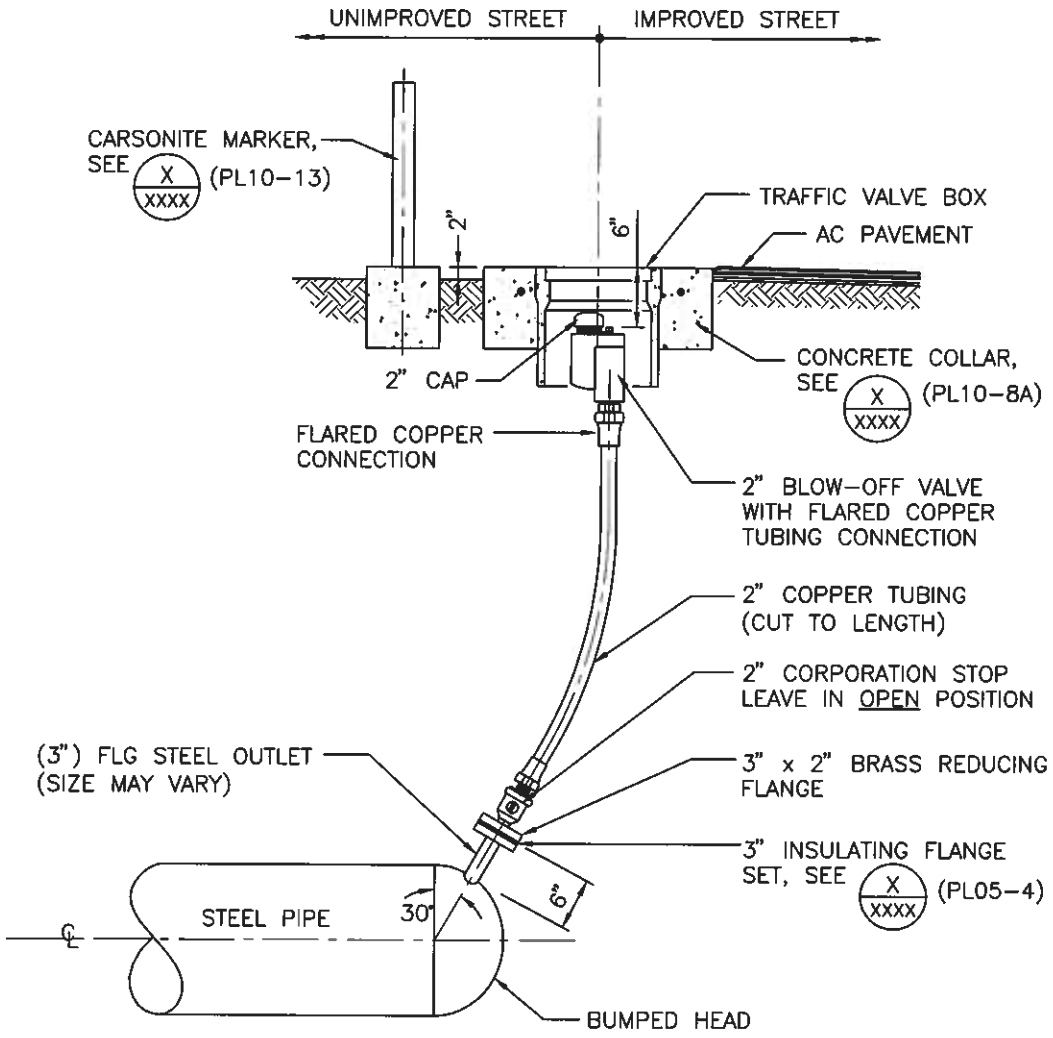

NOTE:

ALL COPPER TUBING AND BRASS PIPE SHALL BE WRAPPED WITH TWO LAYERS OF SIX (6) MIL POLYETHYLENE AND BACKFILLED ALL AROUND WITH 4" MINIMUM OF SAND.

MANUAL AIR RELEASE ASSEMBLY (STEEL PIPE)

NOT TO SCALE PL10-2 070208

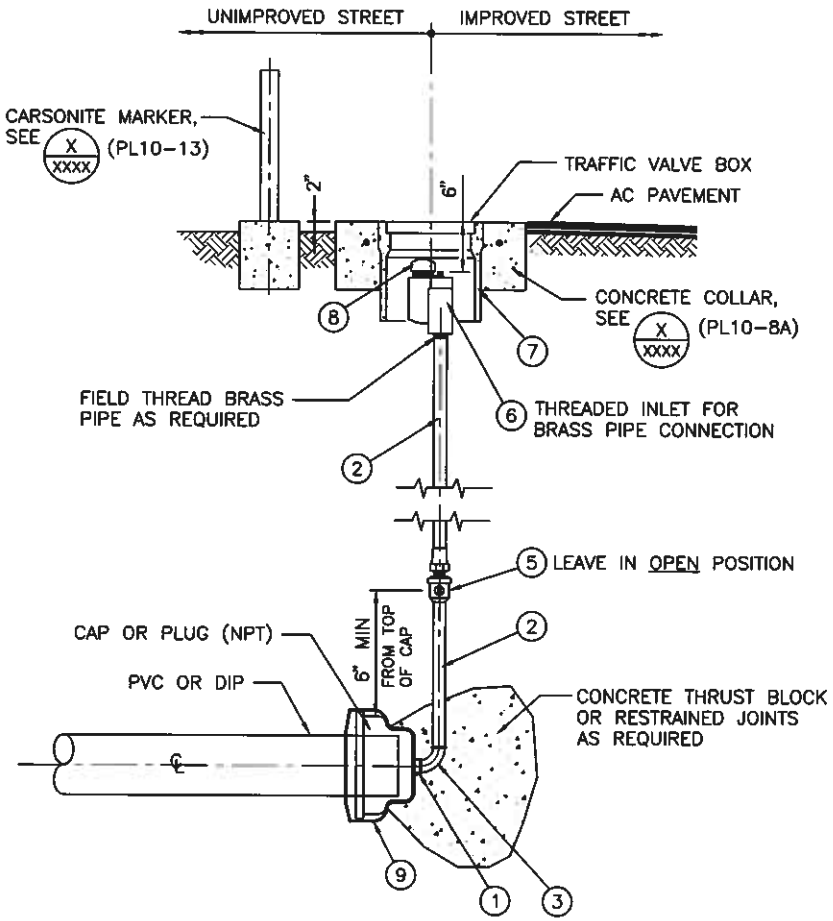

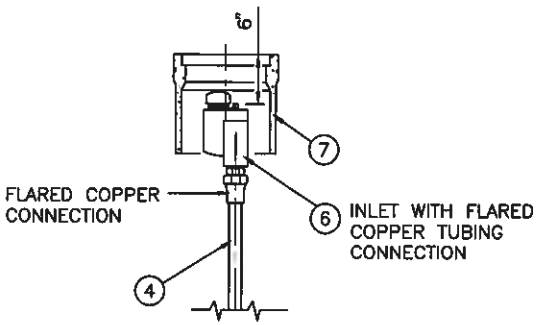

COPPER TUBING ALTERNATE INSTALLATION

NOTES:

1. ALL COPPER TUBING AND BRASS PIPE SHALL BE WRAPPED WITH TWO LAYERS OF SIX (6) MIL POLYETHYLENE AND BACKFILLED ALL AROUND WITH 4" MINIMUM OF SAND.
2. TEFLON TAPE TO BE INSTALLED ON THREADS OF BRASS 90° ELBOW FOR CONNECTION INTO CAP.

LEGEND:

(1) TEFLON TAPE (SEE NOTE 2)
(2) 2" BRASS PIPE (MALE x MALE), LENGTH AS REQUIRED
(3) 2" 90° BRASS ELBOW (FEMALE x MALE)
(4) 2" COPPER TUBING, LENGTH AS REQUIRED
(5) 2" CORP STOP
(6) 2" BLOW-OFF VALVE
(7) TRAFFIC VALVE BOX
(8) 2" CAP
(9) EIGHT (8) MIL POLYETHYLENE (WRAP ENTIRE CAP)

MANUAL AIR RELEASE ASSEMBLY (ALTERNATE METHOD)

NOT TO SCALE PL10-3 070208

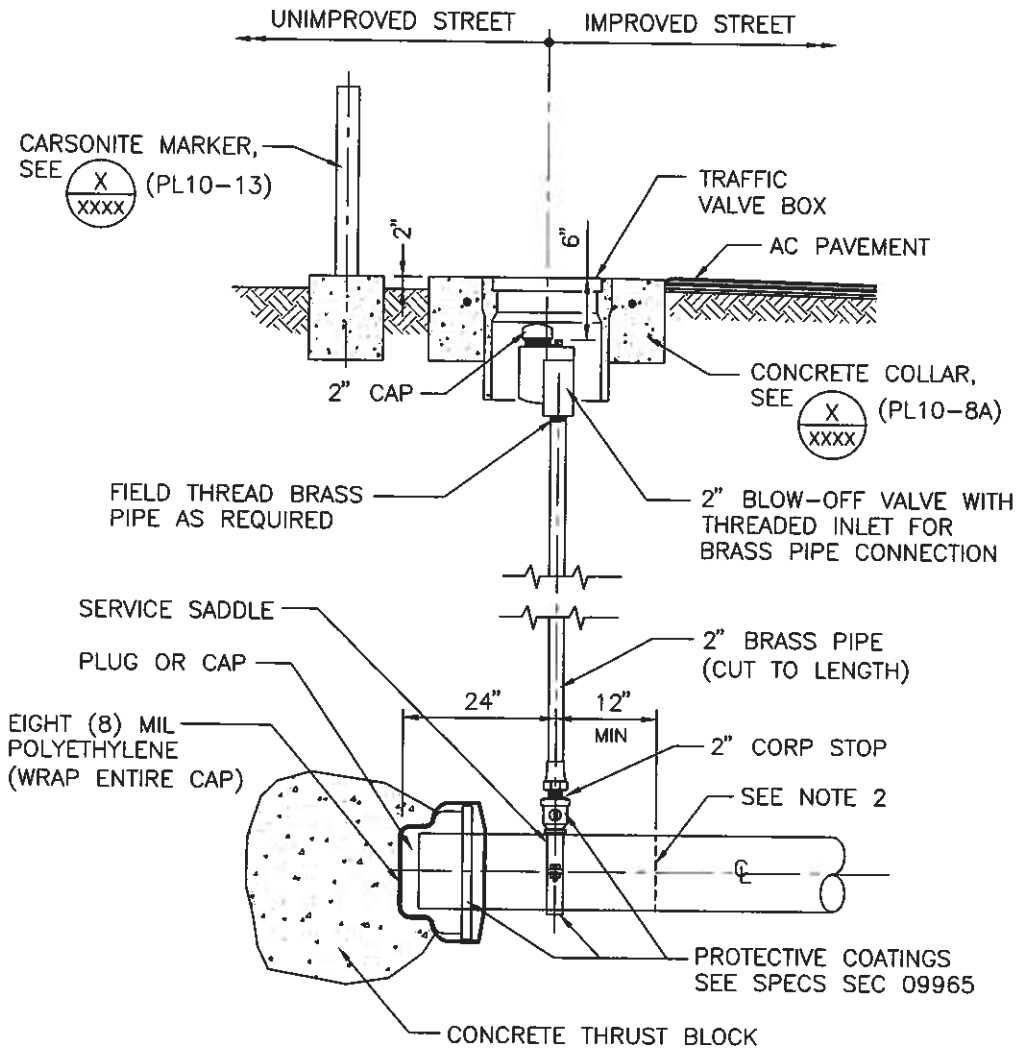

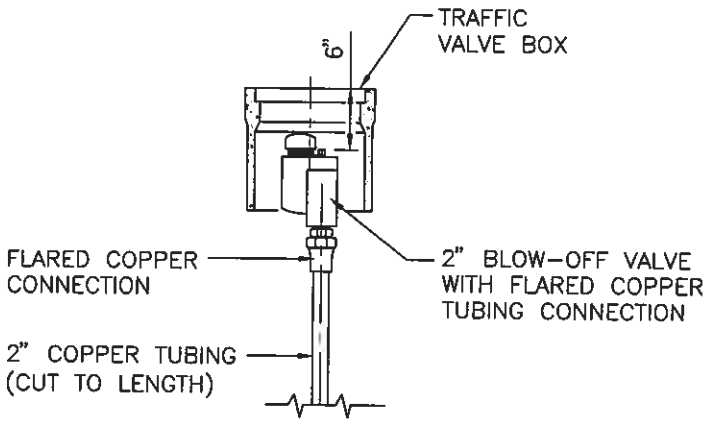

COPPER TUBING ALTERNATE INSTALLATION

NOTES:

1. ALL COPPER TUBING AND BRASS PIPE SHALL BE WRAPPED WITH TWO LAYERS OF SIX (6) MIL POLYETHYLENE AND BACKFILLED ALL AROUND WITH 4" MINIMUM OF SAND.

2. CUT AND REMOVE EXISTING PIPE 12" MIN BEYOND EXISTING BLOW-OFF SERVICE SADDLE PRIOR TO CONNECTING TO EXISTING PIPELINES.

MANUAL AIR RELEASE ASSEMBLY

NOT TO SCALE

PL10-4 070208

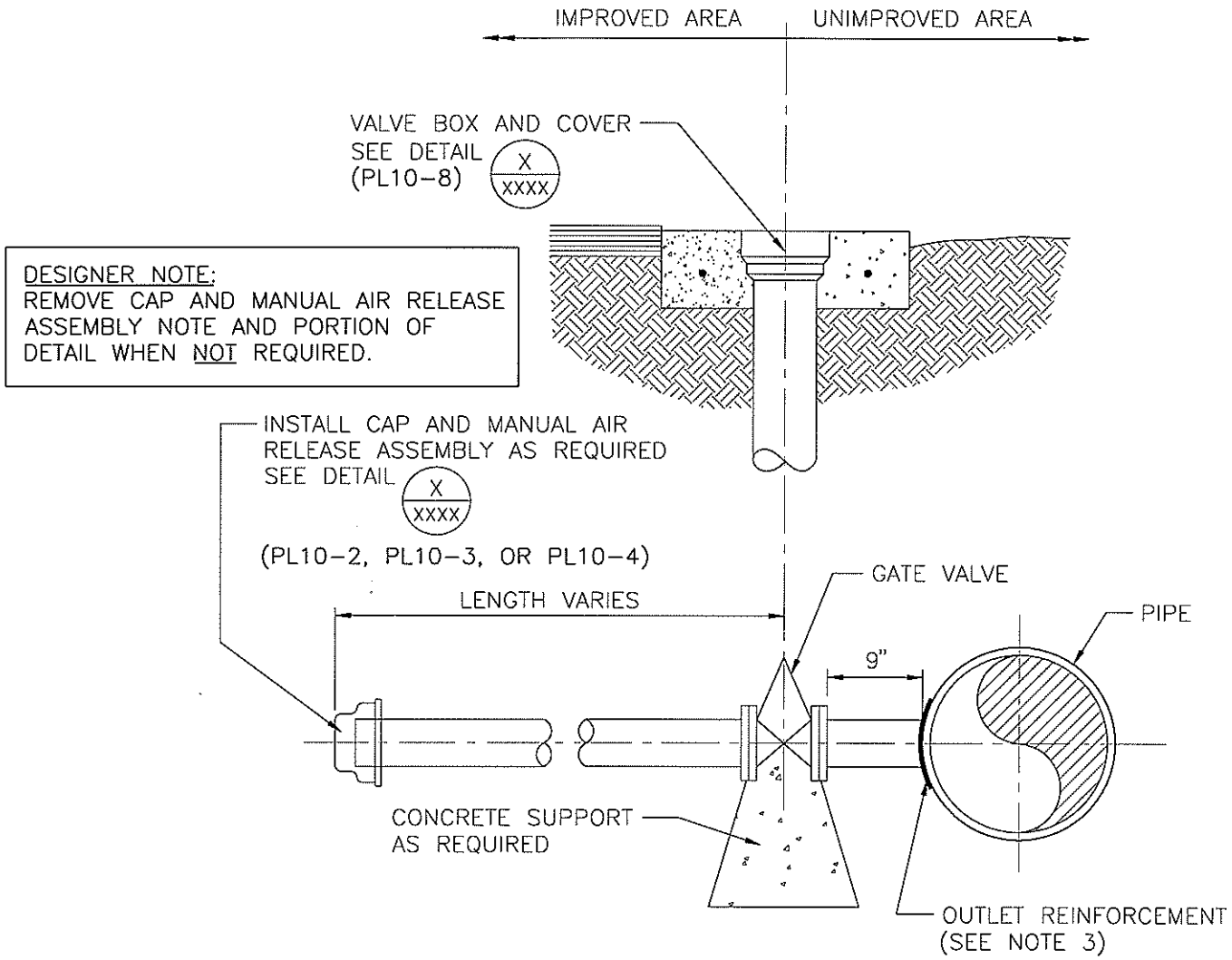

NOTES

1. INSTALL VALVES CLOSED AND OPEN DURING TEST.
2. COAT AND WRAP OUTLET, VALVE AND PLUG. SEE SPECS SEC 03481 AND 09965.
3. OUTLET REINFORCEMENT SHALL BE DETERMINED PER AWWA M11 DESIGN METHOD.

VALVED OUTLET DETAIL

NOT TO SCALE PL10-5 030506

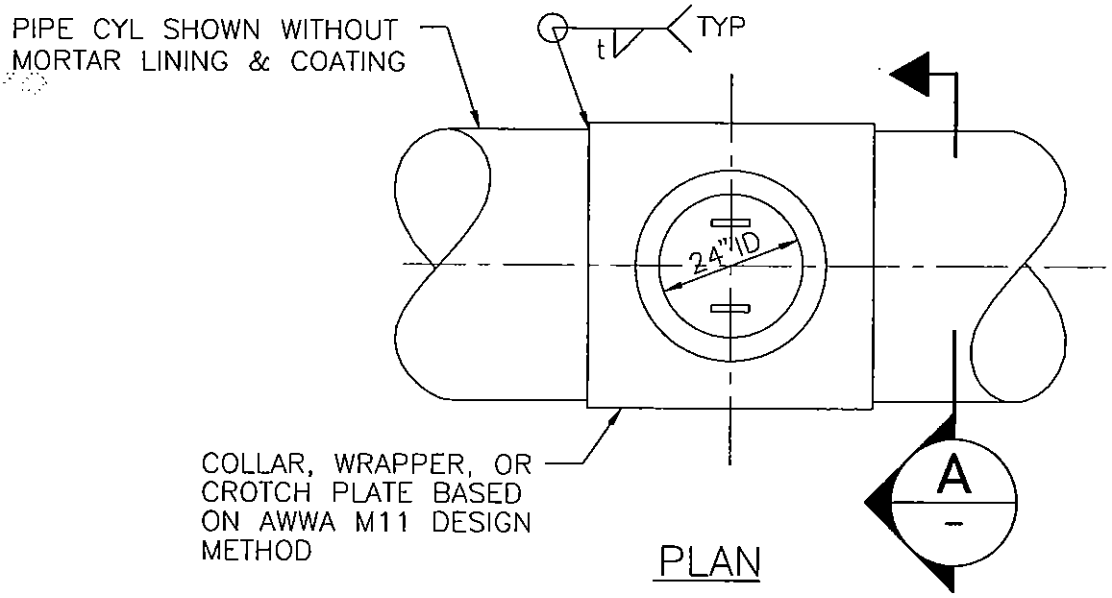

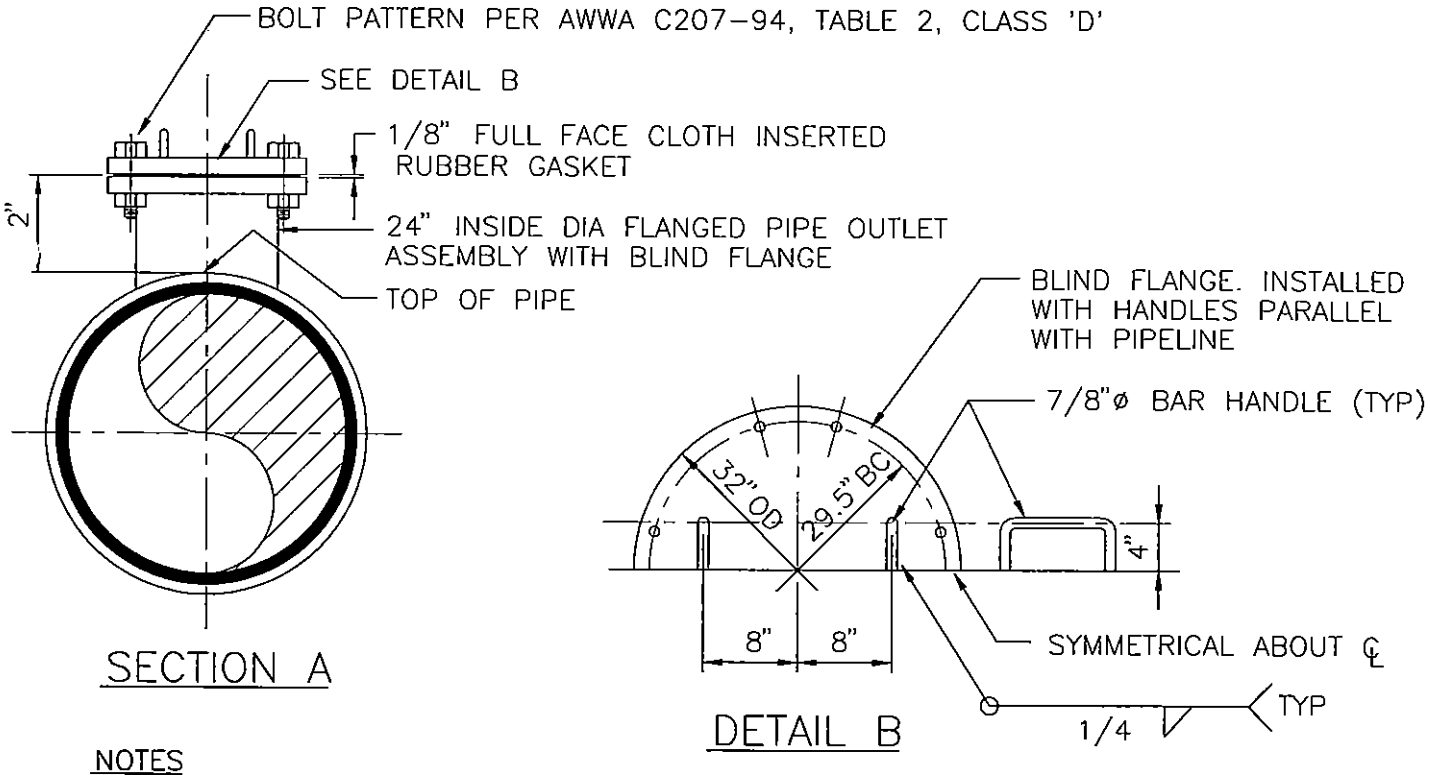

NOTES

1. COAT BURIED EXPOSED METAL SURFACES. WITH 1" THICK CEMENT MORTAR. REINFORCED WITH 1/2" x 1/2" NO 12 GAUGE WELDED WIRE MESH AND WRAP WITH TWO (2) SHEETS OF POLYETHYLENE SHEETING.
2. PIPE ACCESS IS INTENDED FOR USE DURING CONSTRUCTION ONLY.

PIPE ACCESS ASSEMBLY

NOT TO SCALE PL10-6 070703

UNIMPROVED AREA

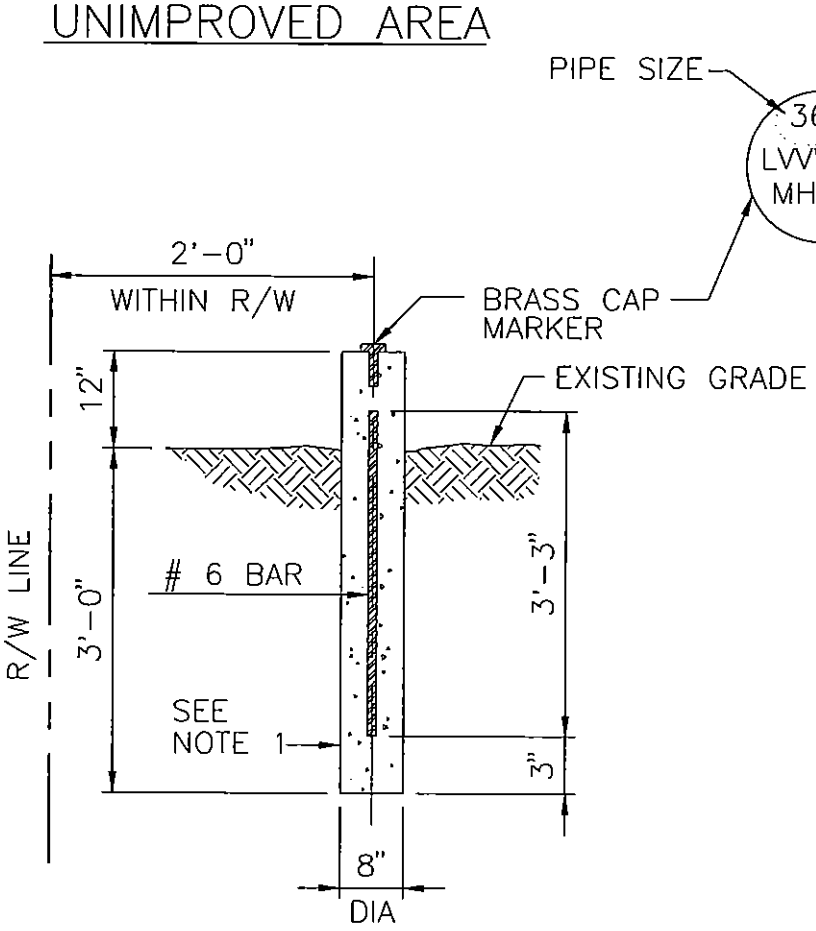

SET 2" DIA BRASS CAP MARKER STAMPED AS SHOWN, IN 8" DIA REINFORCED CONCRETE.

IMPROVED AREA

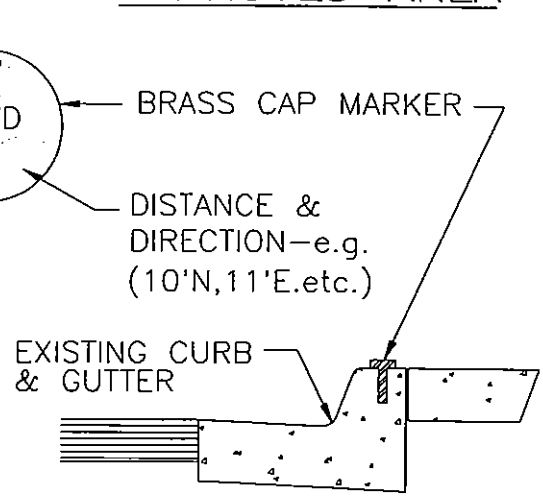

SET 2" DIA BRASS CAP MARKER, STAMPED AS SHOWN, IN TOP OF EXISTING CURB-DRILL CURB AND SET MARKER IN EPOXY.

NOTE

1. CONCRETE SHALL BE 3000 PSI MINIMUM 28 DAYS COMPRESSIVE STRENGTH.
2. MARKER UNNECESSARY WHEN ACCESS MANHOLE CONSTRUCTED.

PIPE ACCESS ASSEMBLY MARKER

NOT TO SCALE PL10-7 070703

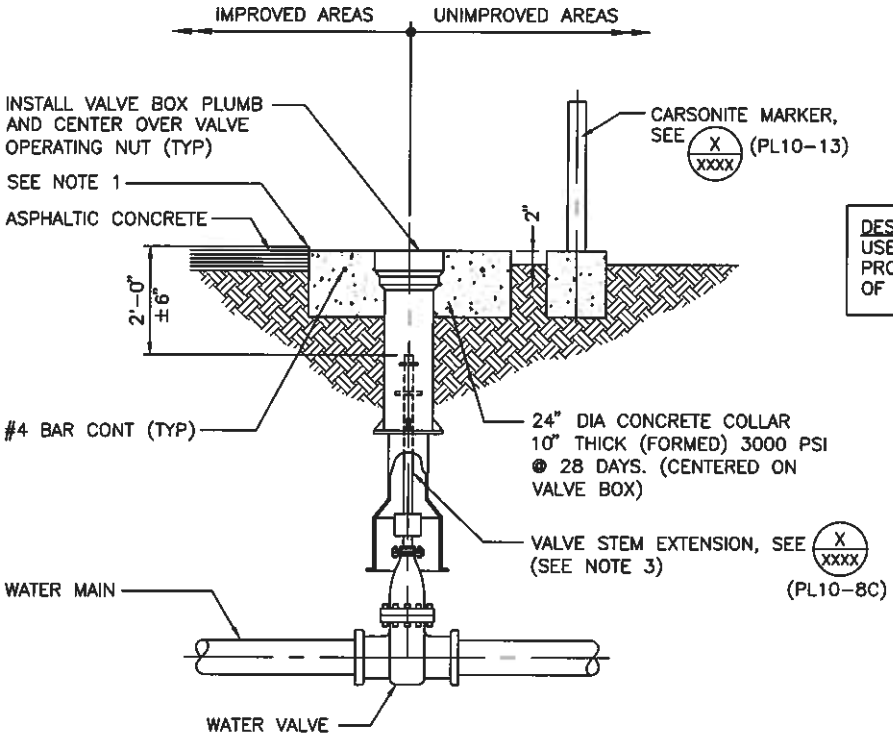

DESIGNER NOTE:
USE ONLY THE VALVE BOX DETAILS PER PROJECT REQUIREMENTS. UNUSED PORTIONS OF THE DETAIL ARE TO BE REMOVED.

NOTES

1. FINAL RIM ELEVATION TO BE 1/8" TO 1/4" BELOW FINAL STREET GRADE.
2. MORE STRINGENT INSTALLATION REQUIREMENTS MAY BE IMPOSED BY THE ENTITY HAVING THE JURISDICTION OVER THE VALVE BOX INSTALLATION LOCATION.
3. A VALVE STEM EXTENSION SHALL BE PROVIDED WHERE THE DEPTH TO THE OPERATING NUT EXCEEDS FIVE (5) FEET.
4. CONTRACTOR TO FORM CONCRETE COLLAR IN UNIMPROVED AREAS WITH SONOTUBE AND REMOVE PRIOR TO BACKFILL INSTALLATION (TYP).
5. SEE SPECIFICATIONS FOR ALL APPROVED PRODUCTS.

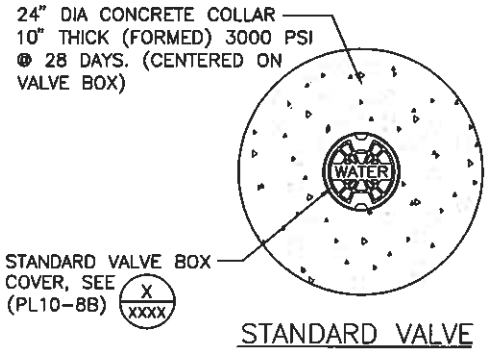

STANDARD VALVE

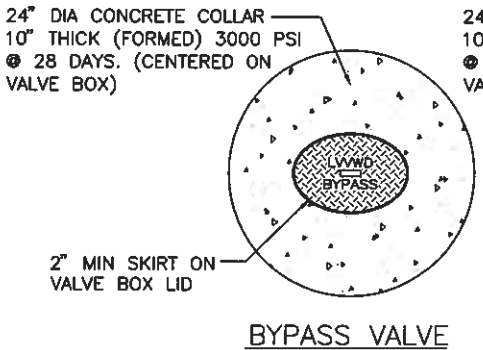

BYPASS VALVE

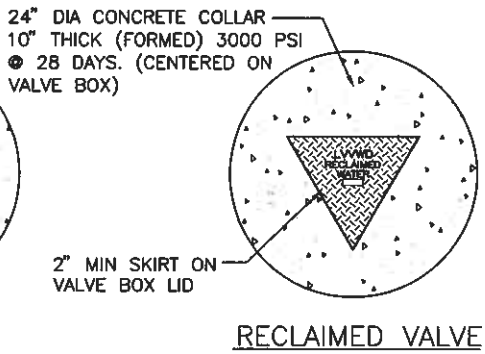

RECLAIMED VALVE

VALVE BOX INSTALLATION

NOT TO SCALE PL10-8 080509

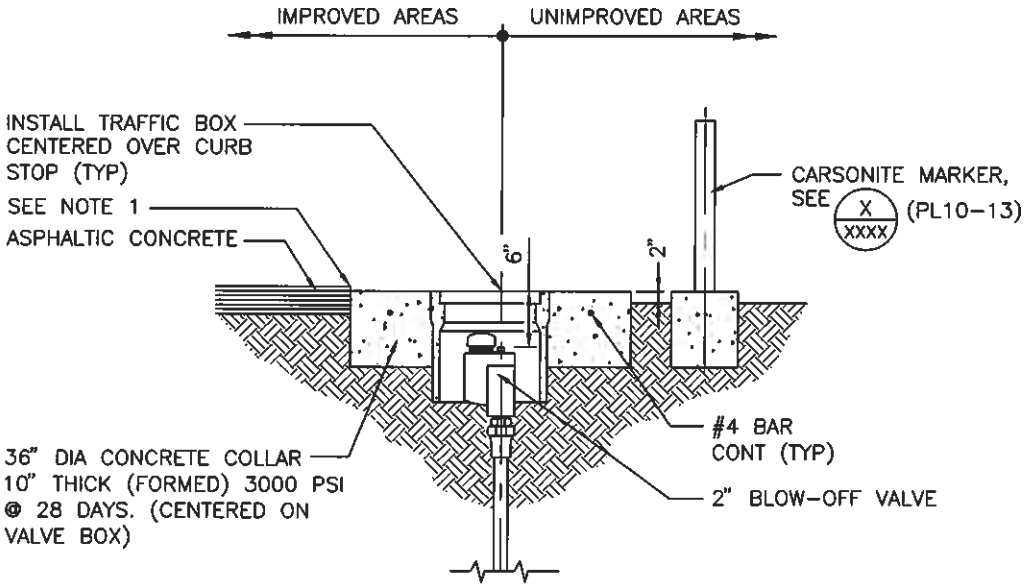

NOTES

1. FINAL RIM ELEVATION TO BE 1/8" TO 1/4" BELOW FINAL STREET GRADE.
2. MORE STRINGENT INSTALLATION REQUIREMENTS MAY BE IMPOSED BY THE ENTITY HAVING THE JURISDICTION OVER THE TRAFFIC BOX INSTALLATION LOCATION.
3. CONTRACTOR TO FORM CONCRETE COLLAR IN UNIMPROVED AREAS WITH SONOTUBE AND REMOVE PRIOR TO BACKFILL INSTALLATION (TYP).
4. SEE SPECIFICATIONS FOR ALL APPROVED PRODUCTS.

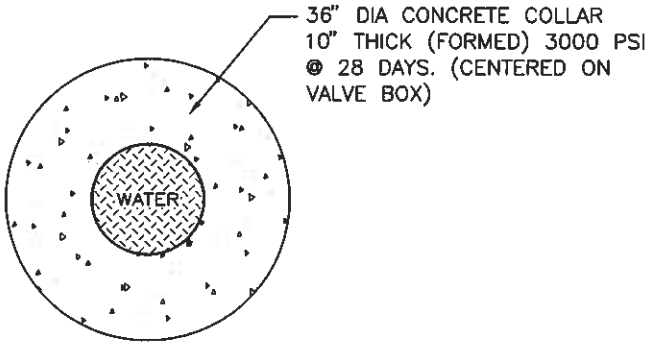

TRAFFIC BOX INSTALLATION

NOT TO SCALE PL10-8A 070208

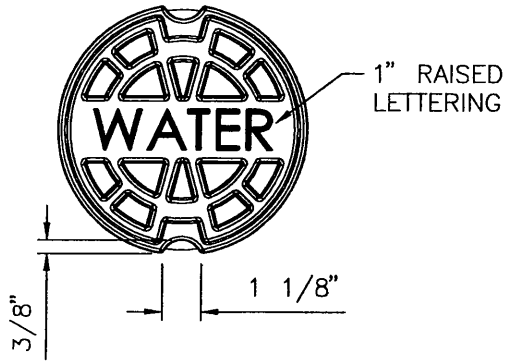

PLAN VIEW

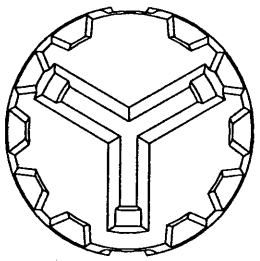

BOTTOM VIEW

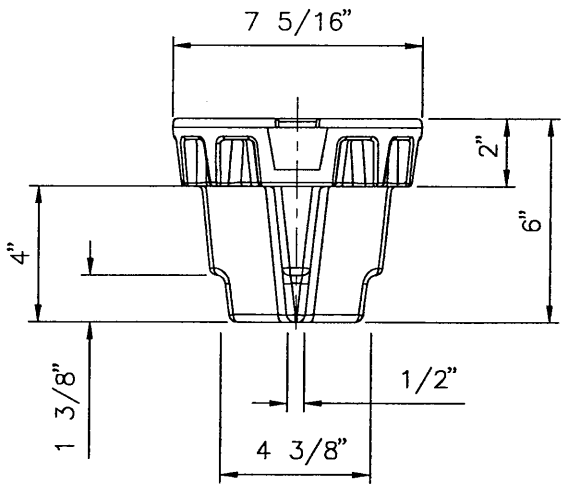

SIDE VIEW

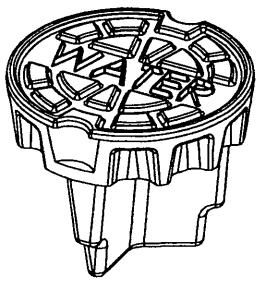

STANDARD VALVE BOX COVER

NOT TO SCALE PL10-8B 041904

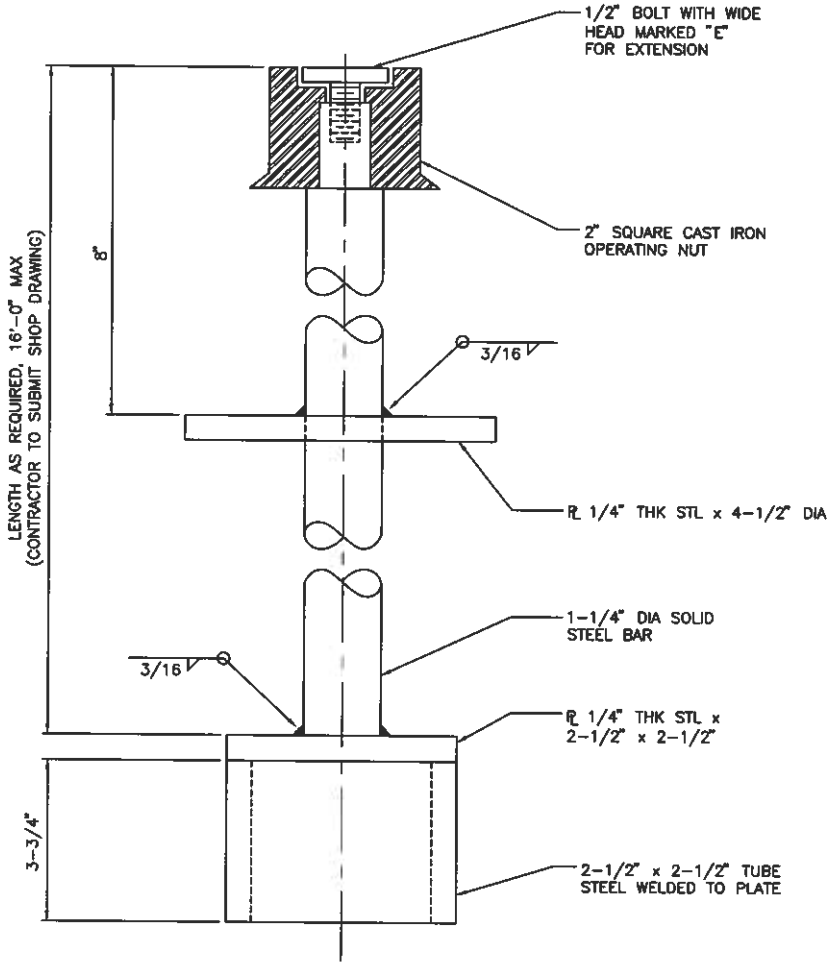

STEM EXTENSIONS 16' AND LESS

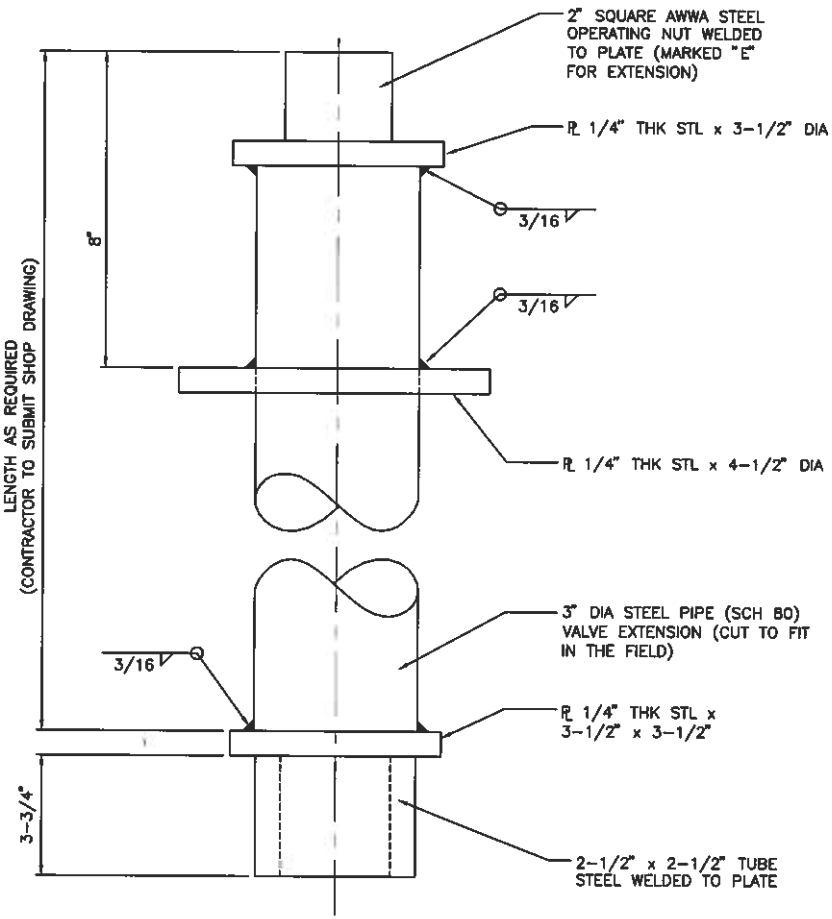

STEM EXTENSIONS GREATER THAN 16'

NOTES:

1. HOT DIP GALVANIZE AFTER FABRICATION.
2. CONTRACTOR TO SUBMIT SHOP DRAWINGS (TYP)

VALVE STEM EXTENSION

NOT TO SCALE PL10-8C 110309

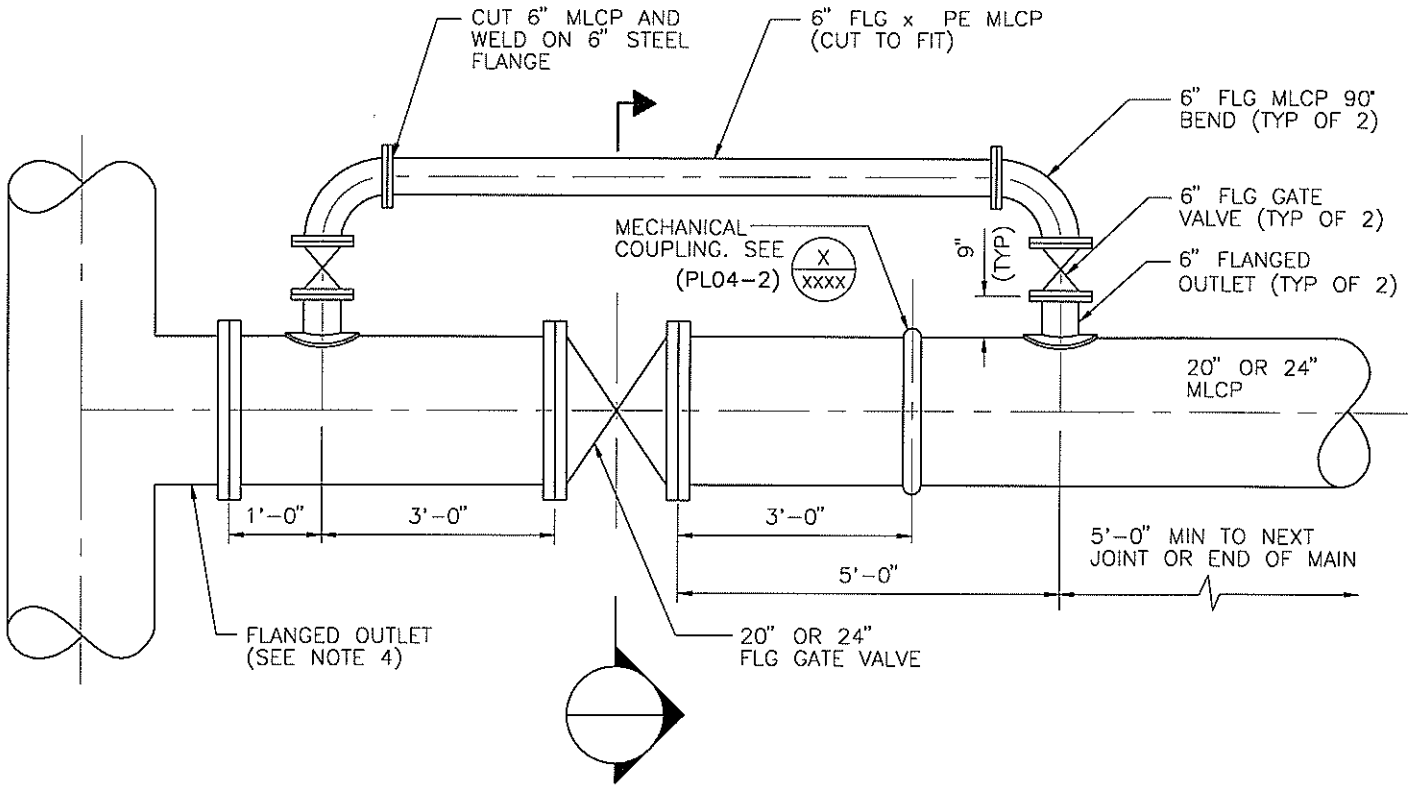

PLAN

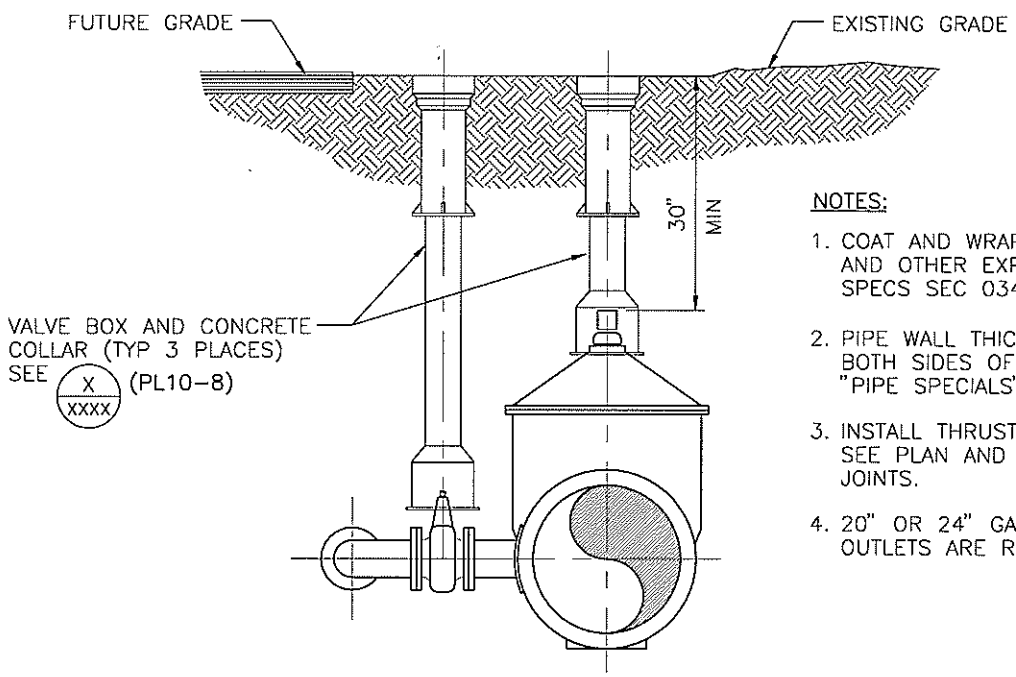

SECTION

NOTES:

1. COAT AND WRAP VALVES, FLANGES, COUPLINGS AND OTHER EXPOSED METAL IN ACCORDANCE WITH SPECS SEC 03481 AND 09965.
2. PIPE WALL THICKNESS FOR MINIMUM TEN FEET ON BOTH SIDES OF VALVE SHALL BE AS REQUIRED FOR "PIPE SPECIALS" IN THE SPECIFICATIONS.
3. INSTALL THRUST/ANCHOR BLOCKS AS REQUIRED. SEE PLAN AND PROFILE FOR LIMITS OF RESTRAINED JOINTS.
4. 20" OR 24" GATE VALVES INSTALLED AS VALVED OUTLETS ARE REQUIRED TO BE FLANGED TO MAIN.

20" AND 24" DIRECT BURIED GATE VALVE WITH BY-PASS INSTALLATION (MLCP)

NOT TO SCALE PL10-9 030506

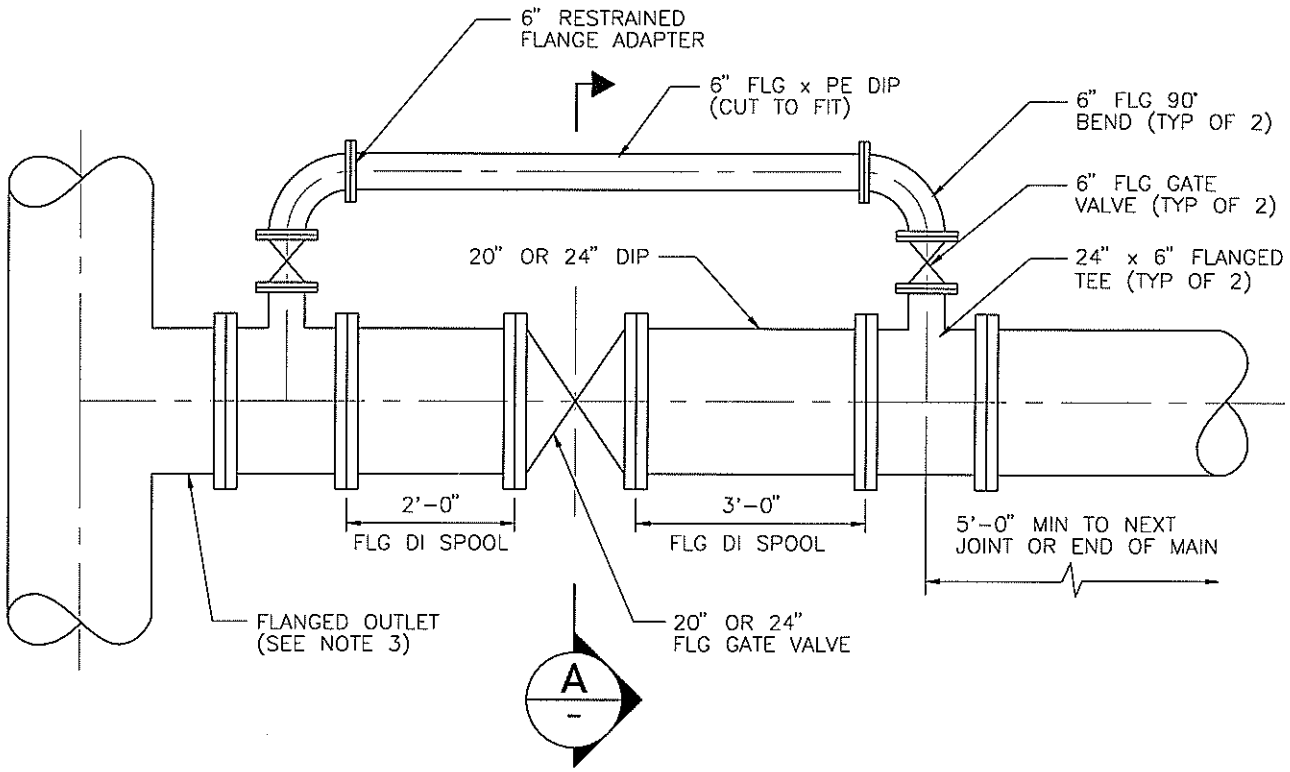

PLAN

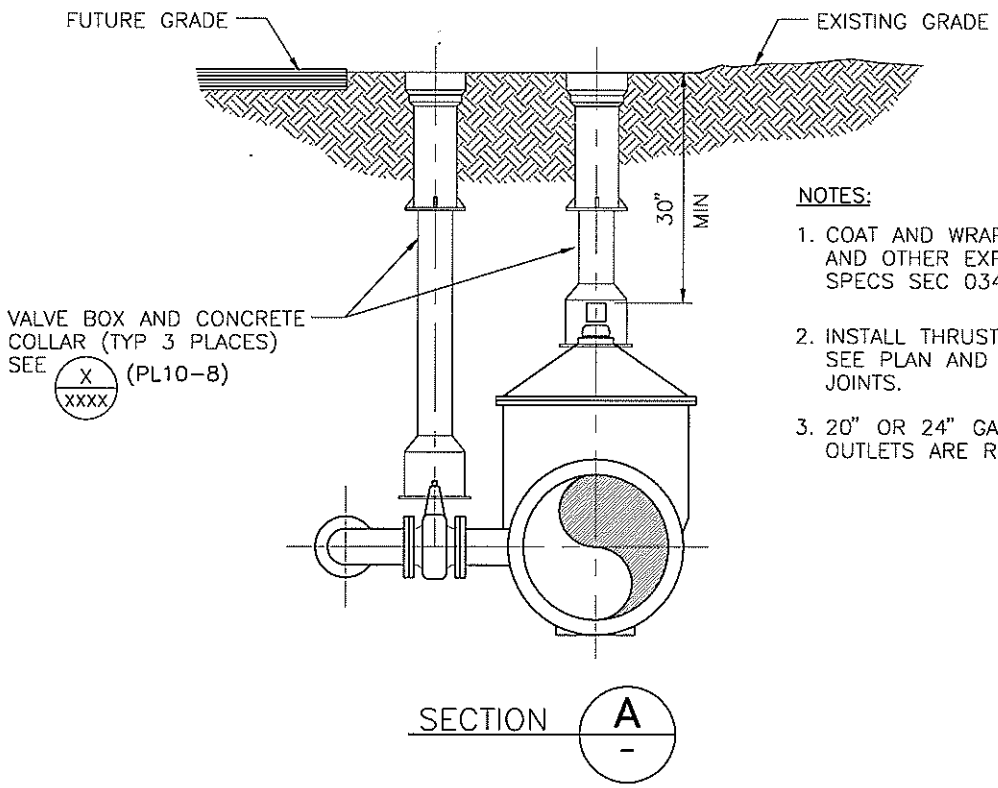

SECTION A -

NOTES:

1. COAT AND WRAP VALVES, FLANGES, COUPLINGS AND OTHER EXPOSED METAL IN ACCORDANCE WITH SPECS SEC 03481 AND 09965.
2. INSTALL THRUST/ANCHOR BLOCKS AS REQUIRED. SEE PLAN AND PROFILE FOR LIMITS OF RESTRAINED JOINTS.
3. 20" OR 24" GATE VALVES INSTALLED AS VALVED OUTLETS ARE REQUIRED TO BE FLANGED TO MAIN.

20" AND 24" DIRECT BURIED GATE VALVE WITH BY-PASS INSTALLATION (DIP)

NOT TO SCALE PL10-10 030506

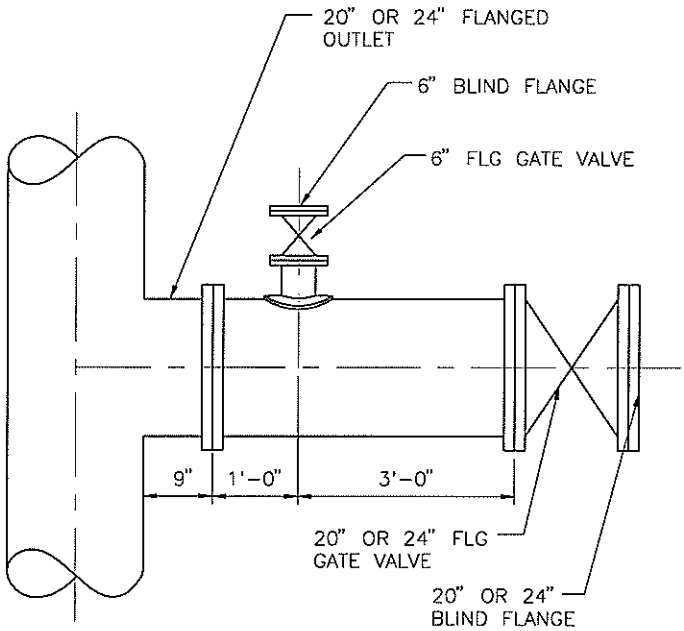

MCLP INSTALLATION

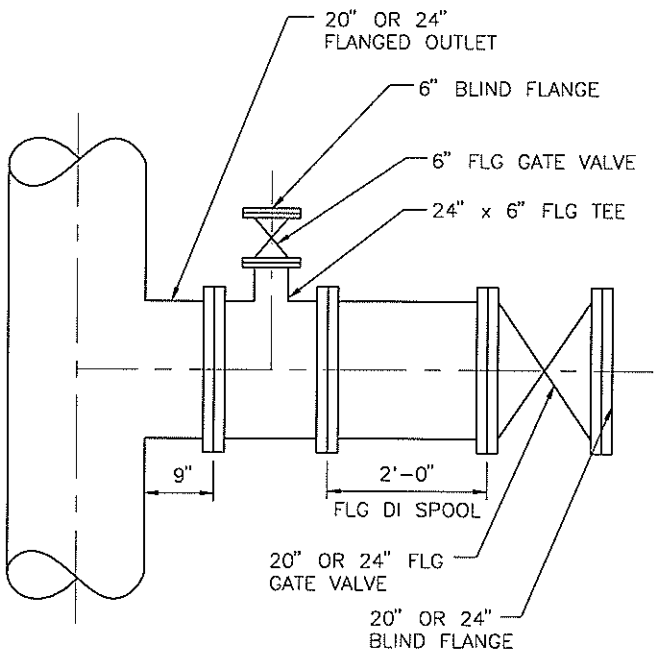

DIP INSTALLATION

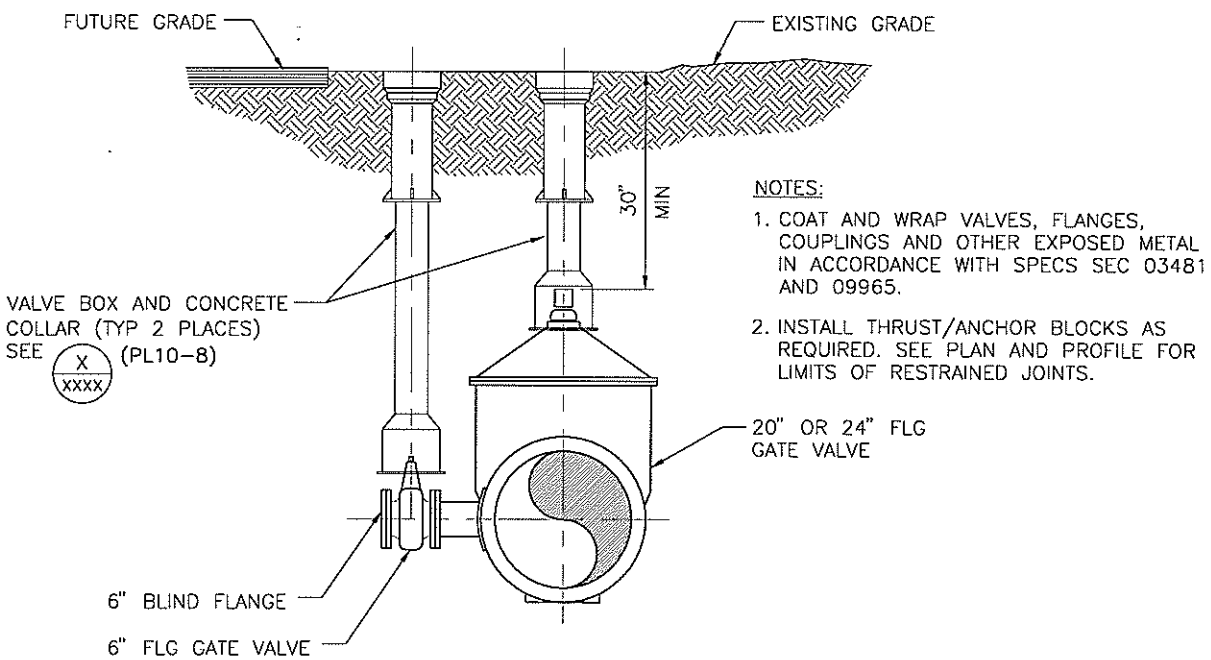

NOTES:

1. COAT AND WRAP VALVES, FLANGES, COUPLINGS AND OTHER EXPOSED METAL IN ACCORDANCE WITH SPECS SEC 03481 AND 09965.
2. INSTALL THRUST/ANCHOR BLOCKS AS REQUIRED. SEE PLAN AND PROFILE FOR LIMITS OF RESTRAINED JOINTS.

SECTION

20" AND 24" VALVED OUTLET WITH DIRECT BURIED GATE VALVE

NOT TO SCALE PL10-11 030506

EXISTING PIPE DATA:	
STEEL CYLINDER OD:	XXXX"
CYLINDER THICKNESS:	XXXX"
LINING THICKNESS:	XXXX"
COATING THICKNESS:	XXXX"
ROD THICKNESS: (IF APPLICABLE)	XXXX"

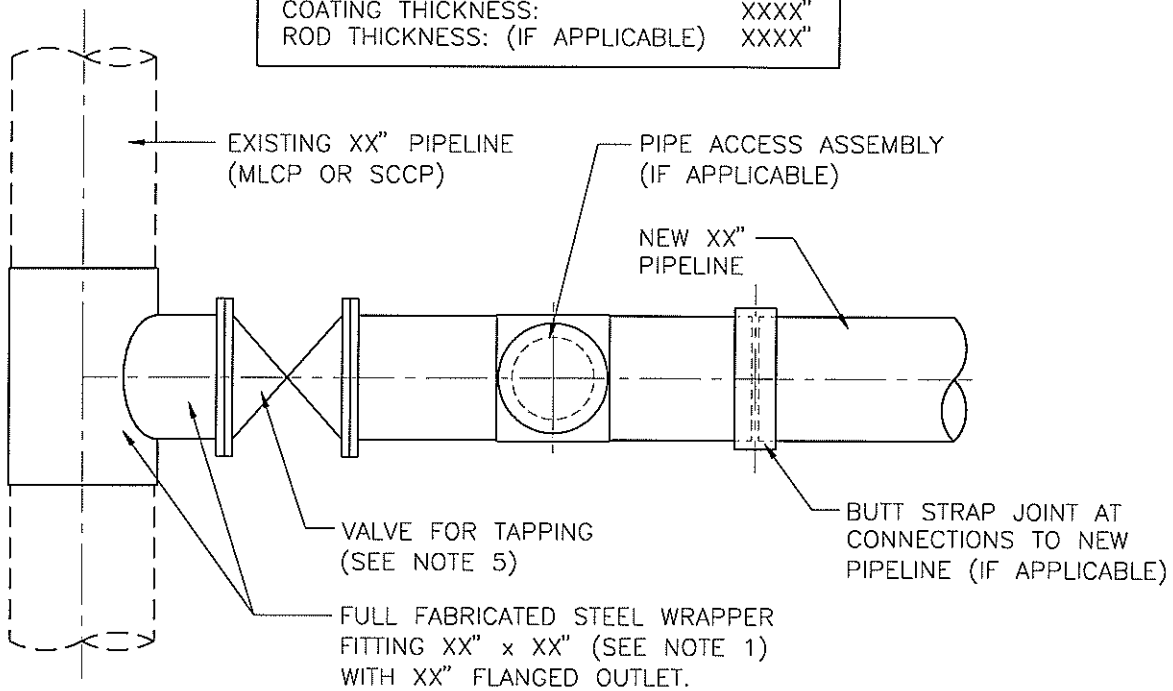

NOTES:

1. TAPPING FITTING SHALL BE FULL WRAPPER DESIGN AND DESIGNED IN ACCORDANCE WITH AWWA MANUAL M11.
2. DESIGN PRESSURE = XXX PSI
   STATIC PRESSURE = XXX PSI
3. TEST FABRICATED STEEL TAPPING FITTING PER SPECS SEC 02519.
4. ALL FERROUS METALS SHALL BE COATED PER SPECS SEC 03481 AND 09965 OR CEMENT MORTAR LINED. APPLY REINFORCED MORTAR COATING AFTER COMPLETION.
5. TAPPING VALVE MAY BE REMOVED OR LEFT IN PLACE AS REQUIRED.
6. THE EXISTING PIPE SHALL REMAIN IN SERVICE, WITH WATER FLOWING, DURING ENTIRE TAPPING OPERATION.
7. VERIFY POSITION OF PROPOSED TAP PRIOR TO COMMENCING OPERATION. POSITION TAP AT LEAST 5 FEET FROM JOINT IN EXISTING PIPE.
8. PROVIDE SUPPORT FOR TAPPING VALVE AND TAPPING MACHINE.
9. CONTRACTOR SHALL VERIFY SIZE, THICKNESS, LINING AND COATING OF EXISTING PIPELINE PRIOR TO COMPLETION OF WET TAP.

WET TAP OF EXISTING STEEL MAINS

NOT TO SCALE PL10-12 030506

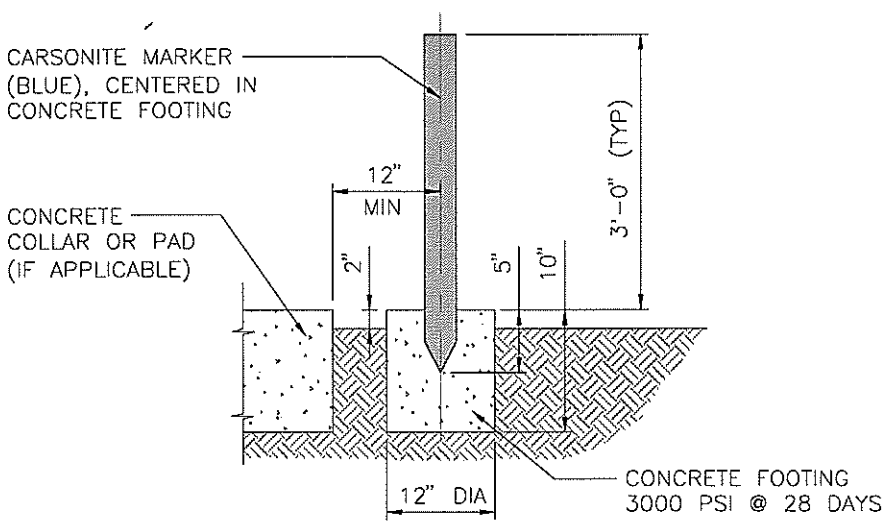

NOTE:
SEE SPECIFICATIONS FOR ALL APPROVED PRODUCTS.

CARSONITE MARKER INSTALLATION

NOT TO SCALE PL10-13 091406

CROSS

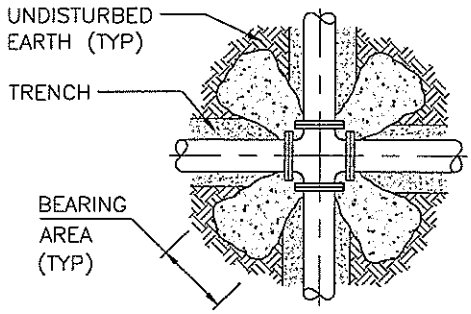

(FIGURE 1)

TEE, PLUG OR CAP

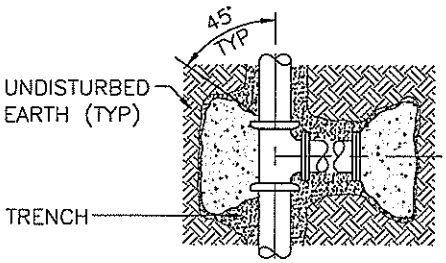

(FIGURE 2)

HORIZONTAL OR UPWARD VERTICAL BEND

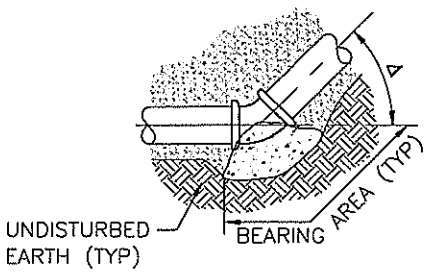

(FIGURE 3)

DOWNWARD VERTICAL BEND

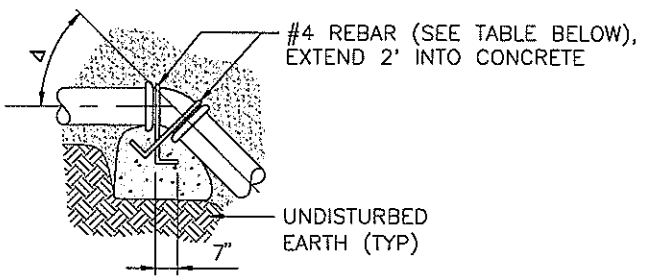

(FIGURE 4)

NOTE:

COAT AND WRAP ALL METAL SURFACES IN ACCORDANCE WITH SECTION 09965 OF THE LVVWD SPECS, PROTECTIVE COATINGS. ALL CONCRETE SHALL BE 3000 PSI MINIMUM, 28 DAYS COMPRESSIVE STRENGTH. CONCRETE IS TO BE PLACED AGAINST UNDISTURBED EARTH. TABLE BELOW DENOTES MINIMUM BEARING AREA OR VOLUME OF THRUST BLOCK. SPECIAL DESIGN CALCULATIONS ARE TO BE SUBMITTED TO LVVWD FOR APPROVAL IF ALLOWABLE SOIL BEARING CAPACITY IS LESS THAN 3000 PSF. ALL VERTICAL SURFACES NOT BEARING AGAINST UNDISTURBED EARTH SHALL BE FORMED.

	BEARING AREA IN SQ FT						CONC/CU YDS		
PIPE ID	FIGURE	FIGURE	FIGURE 3, Δ				FIGURE 4, Δ		
	1	2	90°	45°	22½°	11¼°	45°	22½°	11¼°
4"	2	2	2	2	1	1	1.0	0.5	0.5
6"	2	3	4	2	1	1	1.5	1.0	0.5
8"	3	5	7	4	2	1	3.0	1.5	1.0
10"	4	8	11	6	3	2	4.0	2.5	1.5
12"	6	11	15	8	4	2	6.0	3.0	1.5
16"	10	20	28	15	8	4	10.5 *	6.0	3.0
18"	13	25	35	19	10	5	13.5 *	7.5	3.5
20"	16	31	44	24	12	6	16.0 **	9.0	4.5
24"	22	44	63	34	17	9	23.5 **	12.5 *	6.5

* #5 REBAR ** #6 REBAR

NOTE:

USE OF THRUST BLOCKS FOR PIPE DIAMETERS GREATER THAN 12" REQUIRES PRIOR DISTRICT APPROVAL AND WILL BE EVALUATED ON A CASE BY CASE BASIS.

THRUST BLOCK INSTALLATION

NOT TO SCALE PL11-1 030206

LEGEND: d = LARGER DIAMETER PIPE SIZE

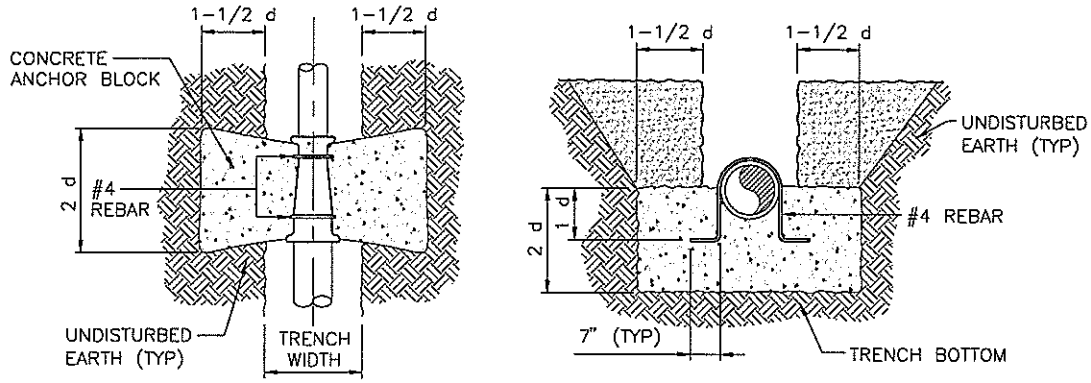

PLAN VIEW ELEVATION

IN-LINE REDUCERS

LEGEND: d = NOMINAL PIPE SIZE

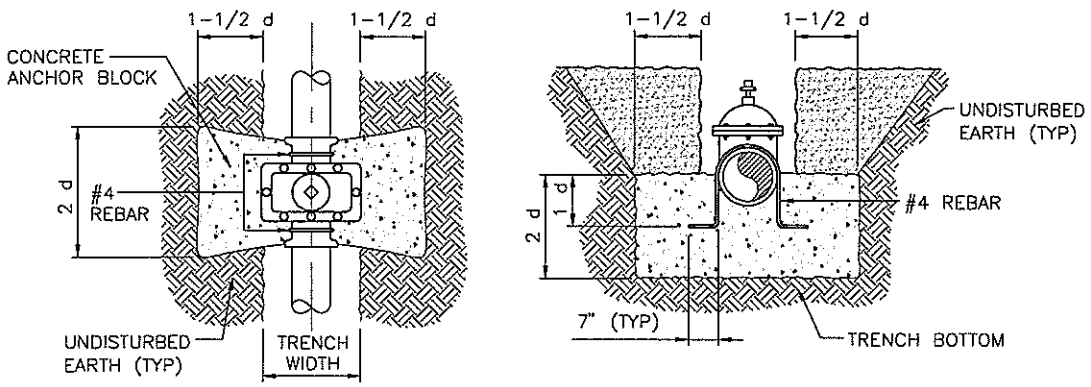

PLAN VIEW ELEVATION

IN-LINE GATE VALVES

LEGEND: d = NOMINAL PIPE SIZE

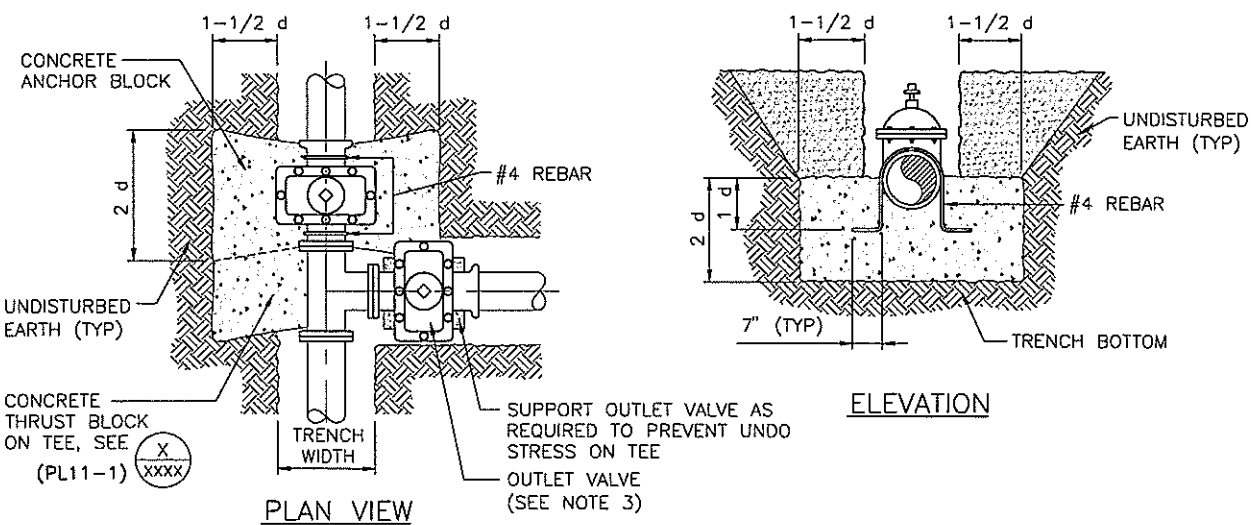

PLAN VIEW ELEVATION

TEE GATE VALVES

NOTES:

1. ALL CONCRETE SHALL BE 3000 PSI MINIMUM 28 DAYS COMPRESSIVE STRENGTH
2. ALL VALVES AND EXPOSED REBAR TO BE COATED AND WRAPPED IN ACCORDANCE WITH SECTION 09965 OF THE LVWD SPECS, PROTECTIVE COATINGS.
3. WHEN PIPE IS INSTALLED BETWEEN TEE AND OUTLET VALVE AN ADDITIONAL CONCRETE ANCHOR BLOCK WILL BE REQUIRED ON THE OUTLET VALVE.

ANCHOR BLOCK DETAILS FOR REDUCERS AND GATE VALVES

NOT TO SCALE PL11-2 030206

APPROXIMATE PIPELINE STATIONING OF TEST STATIONS		
DWG NO	STATION	ADDITIONAL WIRE

NOTES:

1. USE ONLY NATIVE SOIL FREE OF ROCKS AND CLODS FOR BACKFILL AROUND CELLS WITH A MINIMUM OF 5 GALS OF WATER SATURATION DURING INSTALLATION. DO NOT USE SAND AS BACKFILL.
2. SUPPLY ENOUGH WIRE FROM EACH LEAD TO REACH FULL R/W WIDTH PLUS FIVE (5) ADDITIONAL FEET. COIL WIRE IN BOTTOM OF BOX.
3. TEST STATION PLACEMENT TO BE PERPENDICULAR TO PIPE, AT INTERSECTIONS, TEST STATION WIRES TO BE PLACED PARALLEL TO PIPE FOR PLACEMENT PERPENDICULAR TO PIPE AFTER ROAD EASEMENT RADIUS.

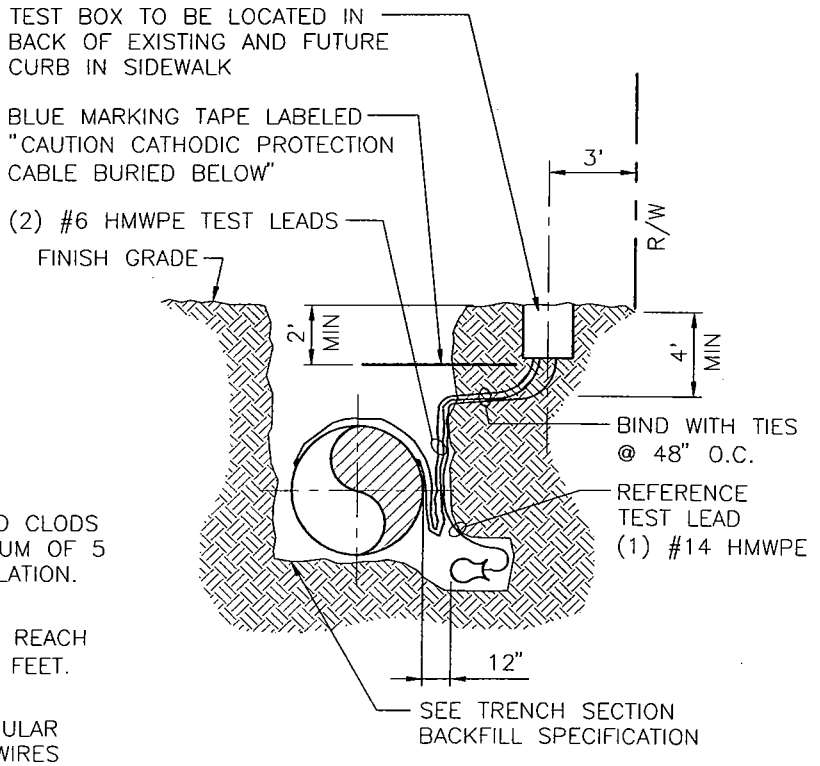

SECTION A

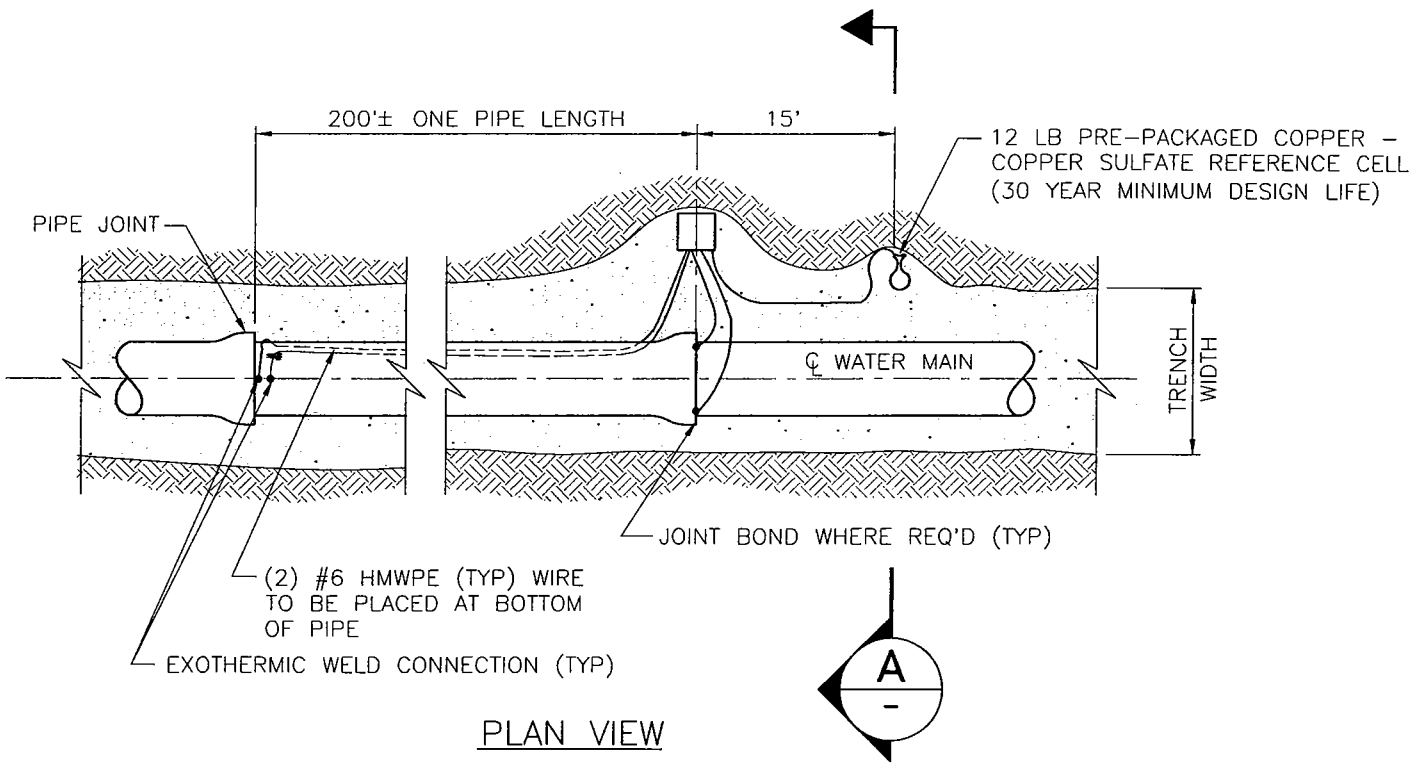

PLAN VIEW

TYPE "T" TEST STATION WITHOUT ANODES

NOT TO SCALE PL12-1 030905

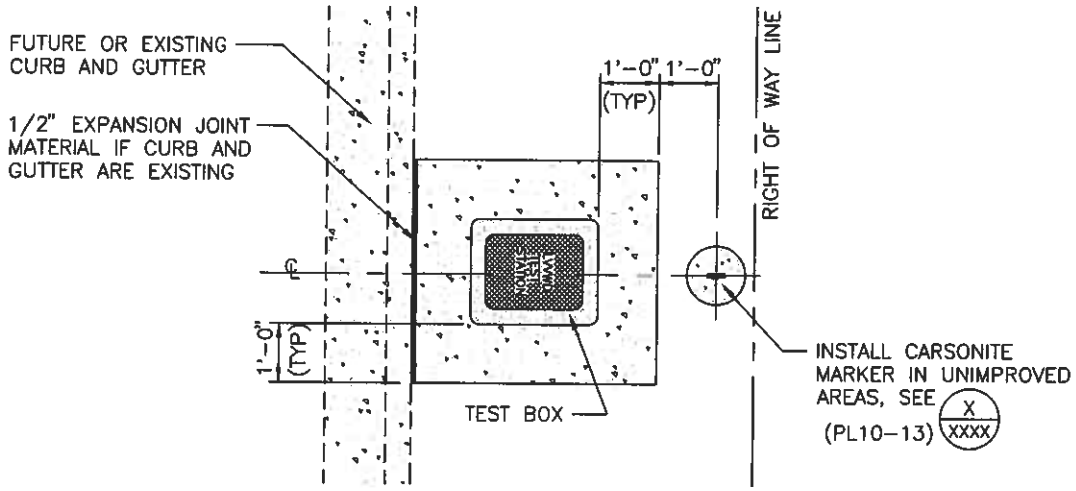

PLAN VIEW

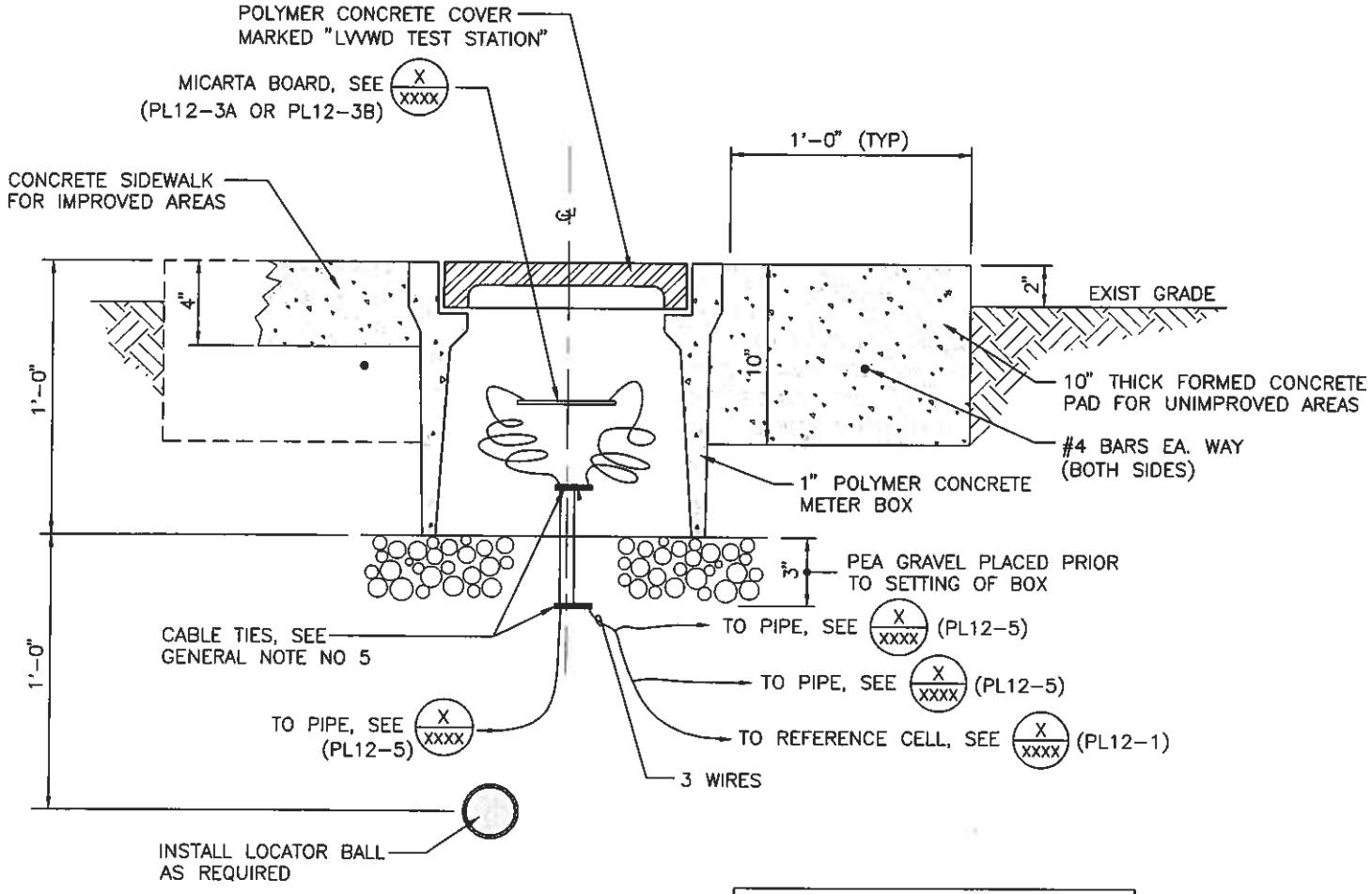

DESIGNER NOTE:
FOR GENERAL NOTES SEE PL12-10

TEST BOX DETAIL - TYPICAL

NOT TO SCALE PL12-2 090808

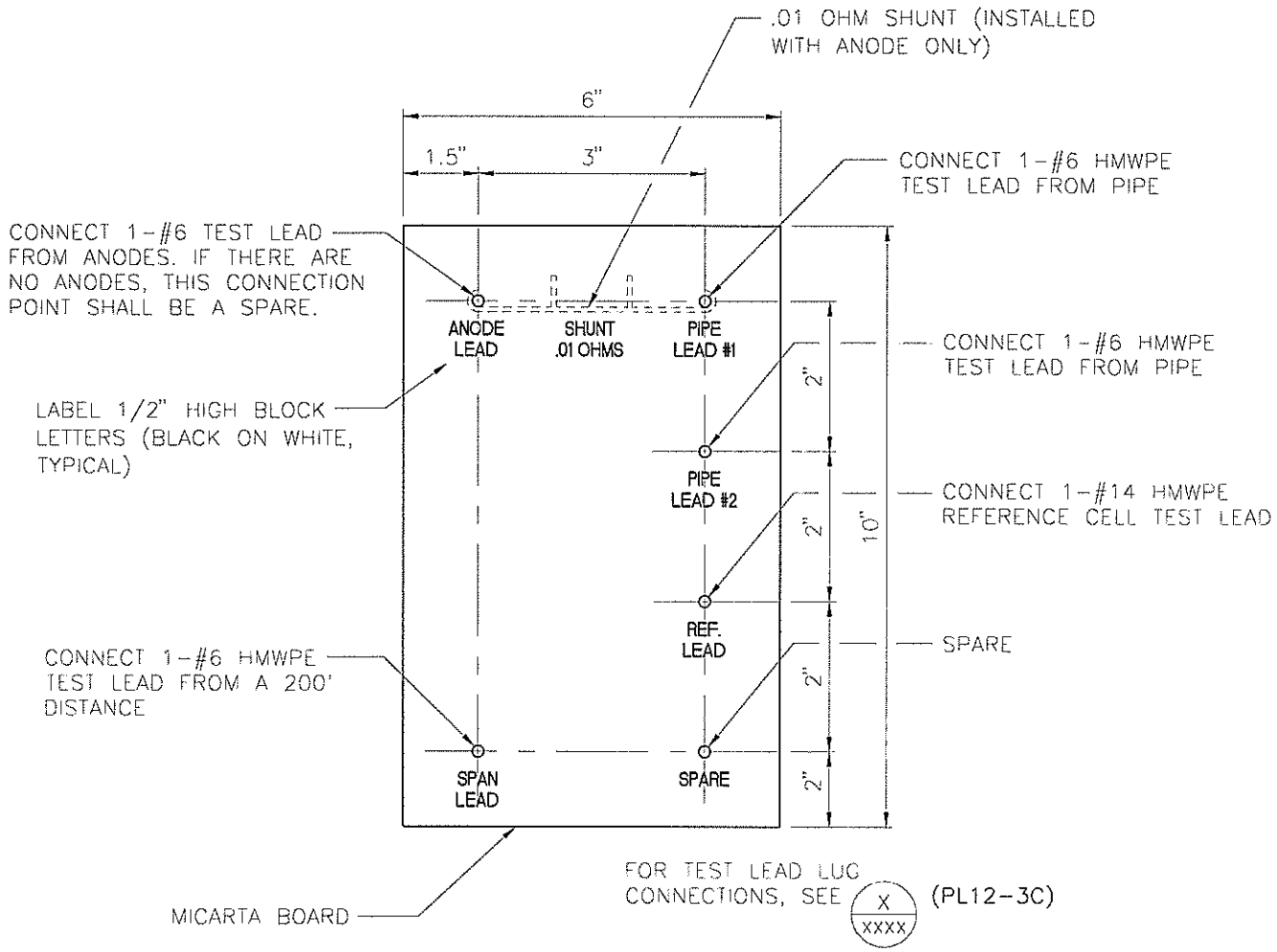

STANDARD TEST BOARD INSTALLATION

NOT TO SCALE PL12-3A 062007

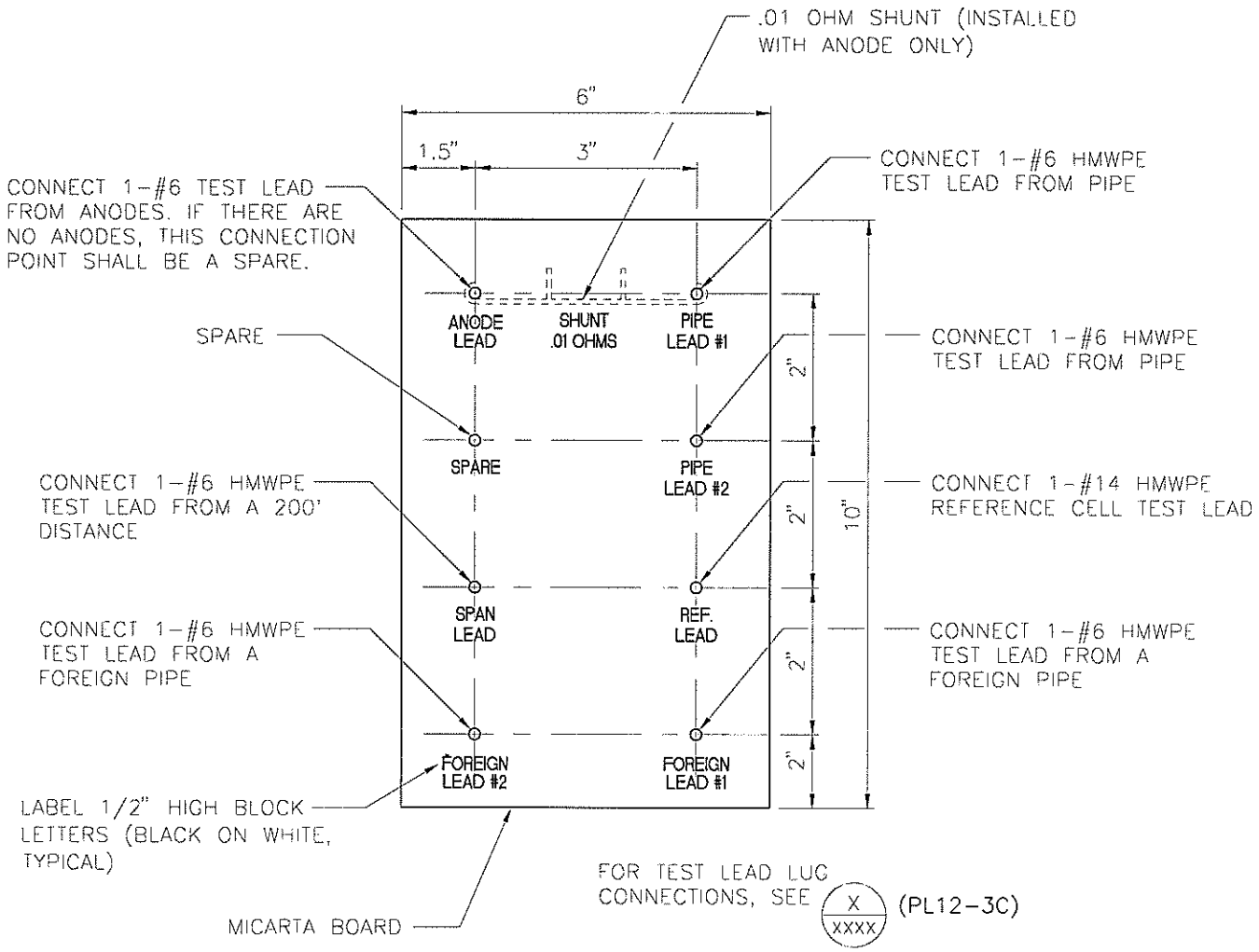

TEST BOARD FOR JOINT TEST STATION

NOT TO SCALE PL12-3B 062007

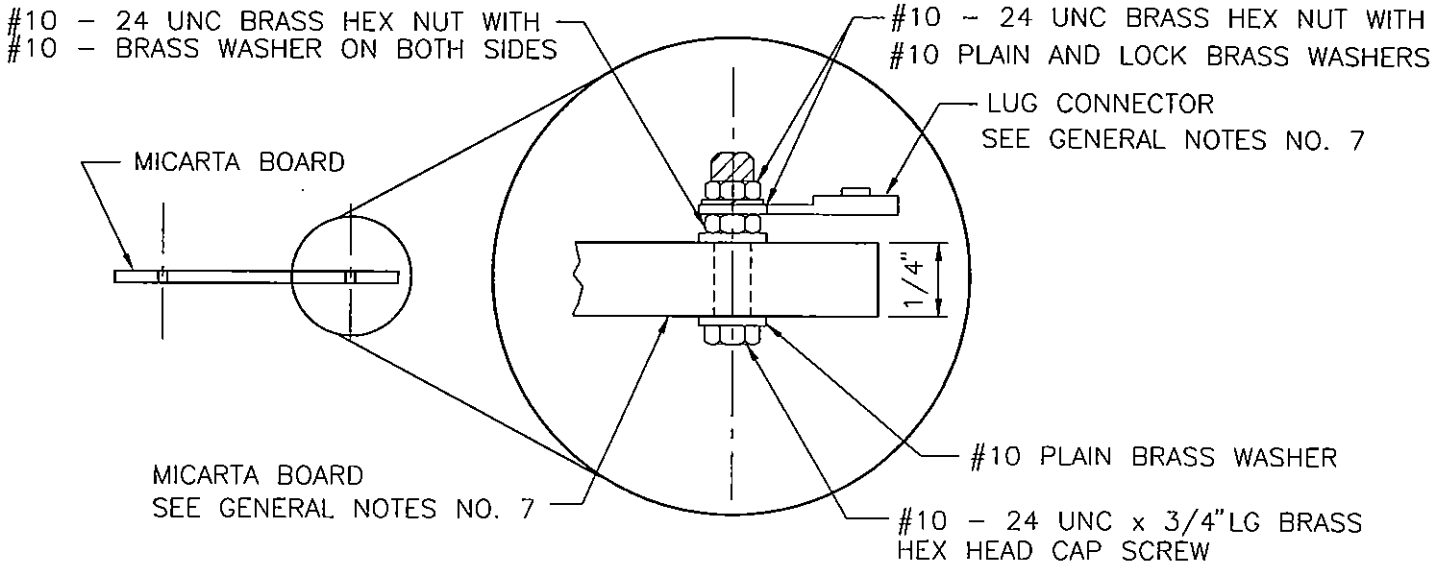

TEST BOARD DETAIL - TYPICAL

NOT TO SCALE PL12-3C 070703

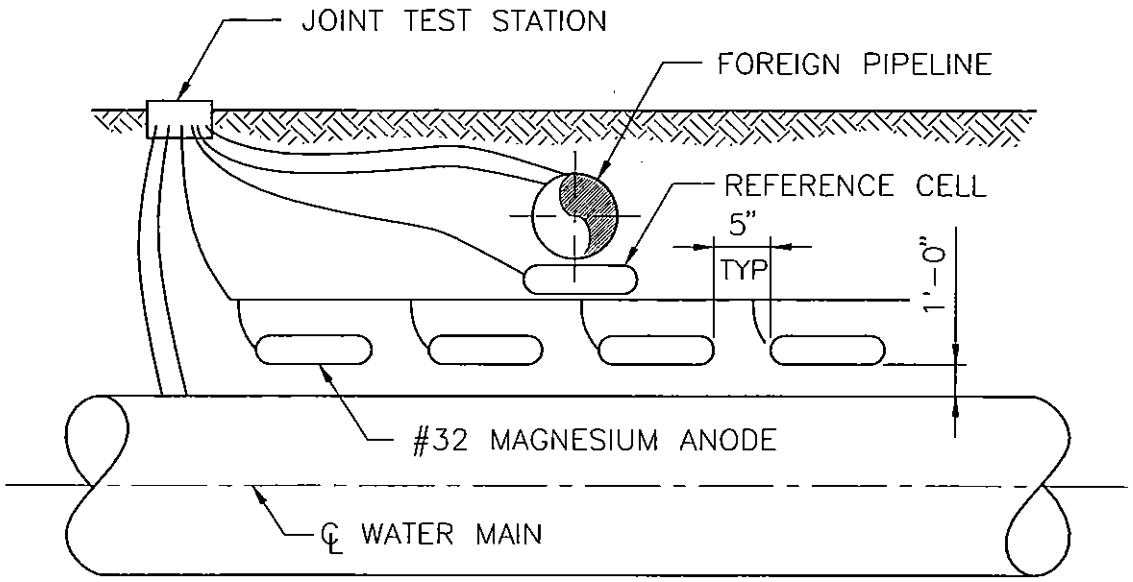

ATTACH ANODE LEAD WIRE TO COLLECTOR CABLE WITH THOMAS ASN BETTS "C" CRIMP OR EQUAL. SEAL SPLICES WITH AQUARIAL AND ELECTRICAL TAPE OR EQUAL. LEAVE SUFFICIENT SLACK IN CABLE FOR TERMINATION AND TO RELIEVE STRESS ON WIRE DURING BACKFILL

SATURATE EACH ANODE WITH MINIMUM 5 GAL WATER BEFORE BACKFILLING

JOINT TEST STATION: CONTRACTOR SHALL INSTALL TYPICAL STATION AS SHOWN TWO WEEKS PRIOR TO INSTALLATION OF THE JOINT TEST STATION. CONTACT: SOUTHWEST GAS (702)565-2765. CAL/NEV PIPELINE CO (714) 888-7771. SOUTHWEST GAS - CAL/NEV WILL MAKE A CONNECTION BETWEEN THEIR FACILITIES AND THE TEST BOARD. PLACE REFERENCE CELL BETWEEN WATER PIPE AND GAS/PETROLEUM MAIN

APPROXIMATE PIPELINE STATIONING FOR JOINT TEST STATIONS WITH ANODE			
DWG NO	STATION	FOREIGN PIPE	ADDITIONAL WIRE

JOINT TEST STATION WITH ANODES FOR STRAY CURRENT MITIGATION

NOT TO SCALE PL12-4 070703

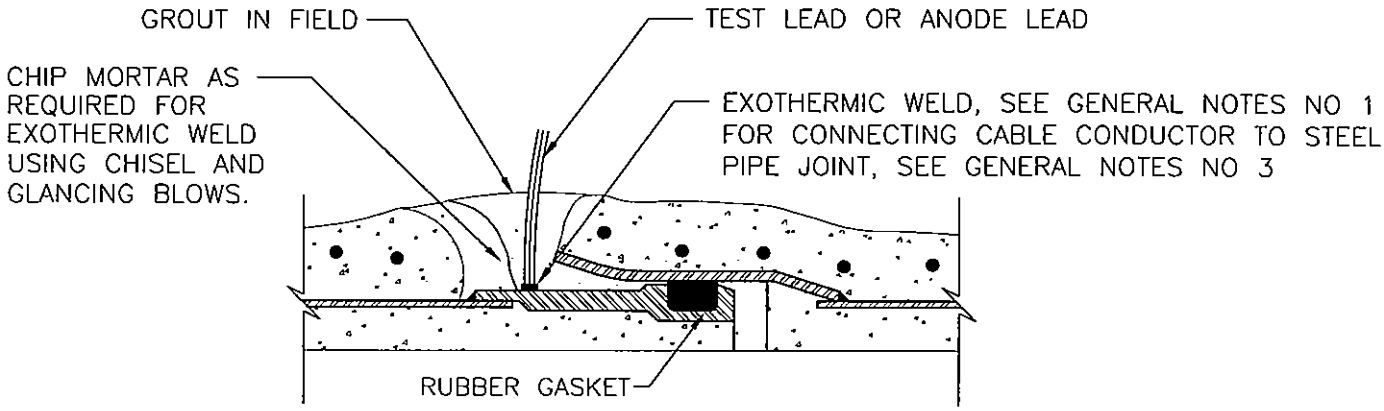

NOTE

FOR WELDED JOINT, ATTACH TEST LEAD OR ANODE LEAD BY EXOTHERMIC WELD TO THE EXPOSED STL END OF PIPE.

TEST LEAD OR ANODE LEAD CONNECTION TO PIPE JOINT CARNEGIE OR ROLLED-GROOVE DETAIL

NOT TO SCALE PL12-5 070703

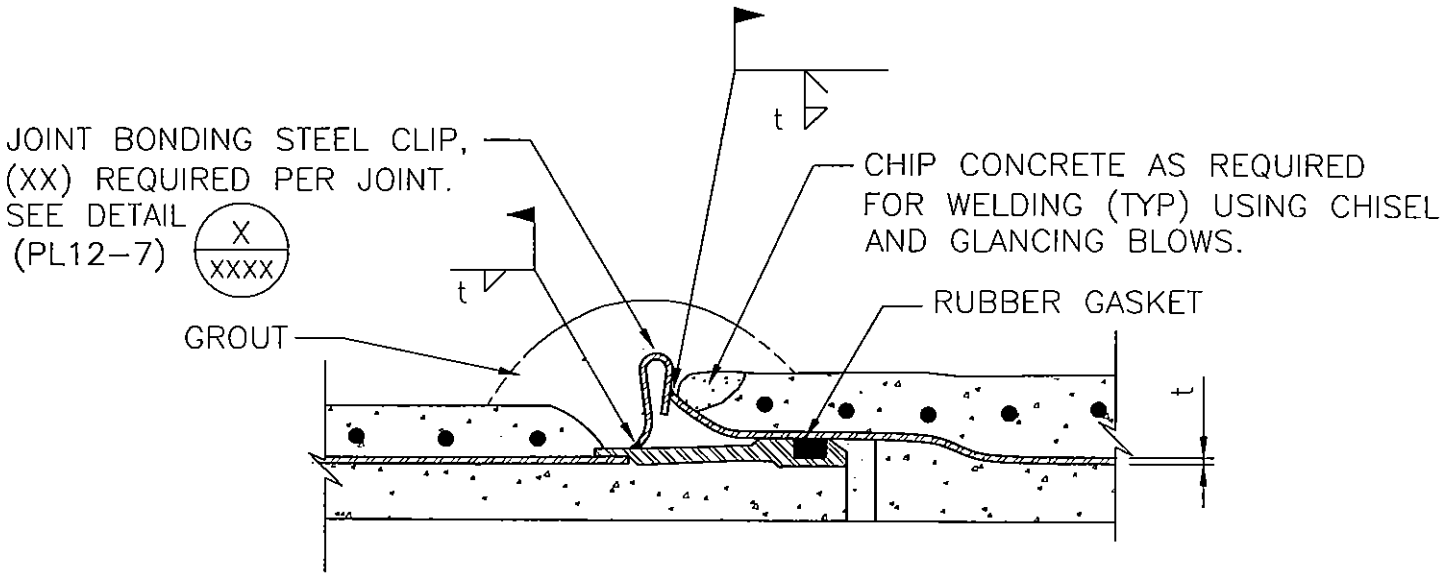

CARNEGIE JOINT BONDING DETAIL

NOT TO SCALE PL12-6 070703

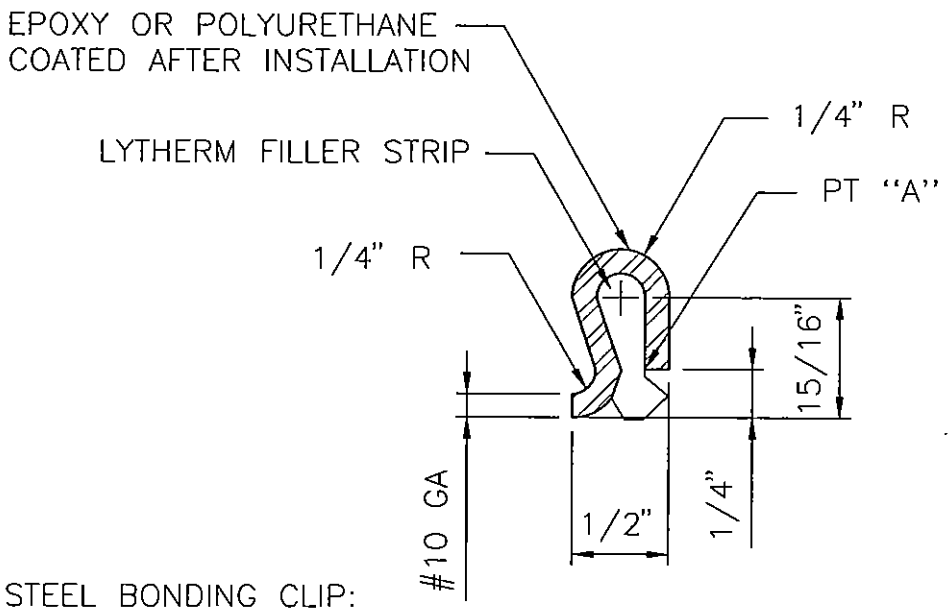

1. STEEL BONDING CLIP:
   MATERIAL SPECIFICATION...ASTM A366 (COMMERCIAL QUALITY)
   CUT LENGTH.....2-1/2" ± 1/16"
   WIDTH.....1-1/4" ± 1/16"

2. LYTHERM FILLER STRIP TO BE 1' x 1-1/2" WIDE TO OVERLAP SIDES OF CLIP

3. CRIMP THE STEEL JOINT BONDING CLIP OVER THE LYTHERM FILLER STRIP AT PT "A" TO COMPRESS THE FILLER MATERIAL. CLOSE THE CAP AT PT "A" AS MUCH AS POSSIBLE WITHOUT CUTTING THE LYTHERM FILLER STRIP

4. IF THE LYTHERM FILLER STRIP IS CUT AT PT "A" REMOVE THE ENTIRE STRIP AND REPLACE WITH A NEW LYTHERM FILLER STRIP PER THIS DETAIL

5. INSTALL THE STEEL BONDING CLIPS EQUIDISTANTLY SPACED ABOVE THE SPRING LINE OF THE PIPE.

6. THE NUMBER OF BONDING CLIPS REQUIRED AT EACH PIPE JOINT:
   24" PIPE AND SMALLER SHALL HAVE TWO (2) BONDING CLIPS INSTALLED.
   PIPE LARGER THAN 24" SHALL HAVE THREE (3) BONDING CLIPS INSTALLED.

BONDING CLIP DETAIL

NOT TO SCALE PL12-7 070703

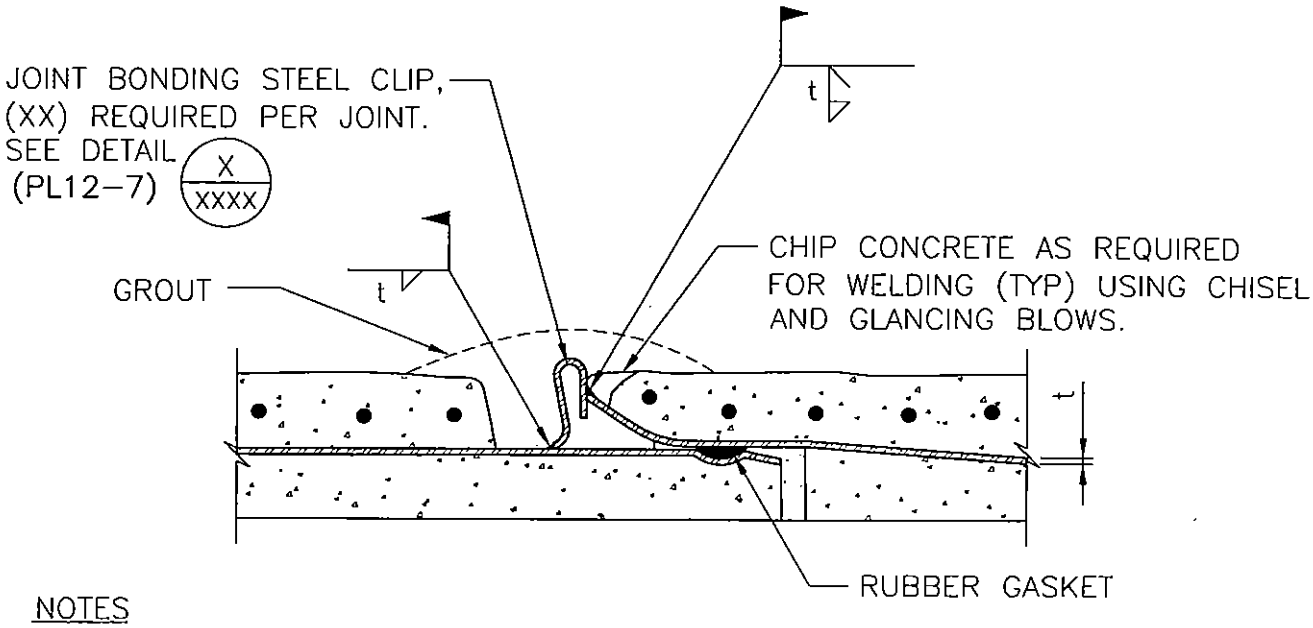

NOTES

1. JOINT BONDING IS REQUIRED AT ALL BELL AND SPIGOT RUBBER GASKET JOINTS EXCEPT FOR FIELD WELDED JOINTS.

2. FOR JOINT BONDING INSTALLATIONS USING STRANDED COPPER BONDING CABLES, MAINTAIN A MIN. OF 4 TO 6 INCHES OF SLACK BETWEEN THE BONDING CABLE POINTS OF ATTACHMENT.

ROLLED - GROOVE JOINT BONDING DETAIL

NOT TO SCALE

PL12-8 070703

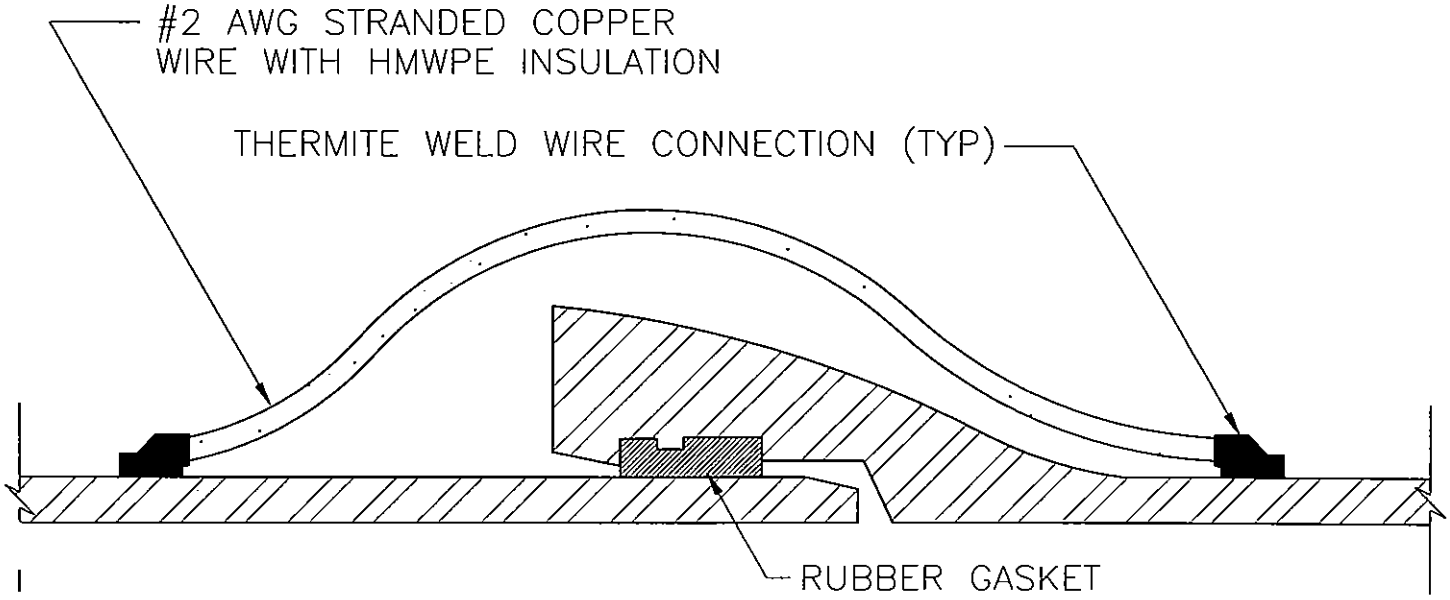

NOTE .
INSTALL TWO BOND WIRES AT EACH PIPE JOINT.

PUSH-ON JOINT BOND DETAIL DUCTILE IRON PIPE

NOT TO SCALE PL12-9 070703

GENERAL NOTES

PL12-10 100808

1. ALL TEST LEADS AND ANODE LEADS SHALL BE ATTACHED TO THE STEEL CYLINDER OF THE PIPE BY MEANS OF A "CADWELD" EXOTHERMIC WELD.
2. ALL TEST LEADS AND ANODE LEADS SHALL BE ATTACHED TO EITHER THE PIPELINE'S BELL END, SPIGOT END OR PLAIN END AS SHOWN ON THE DRAWING.
3. ALL EXPOSED PORTIONS OF THE EXOTHERMIC WELD AND COPPER CABLE CONDUCTORS SHALL BE COATED WITH MULTI-USE EPOXY PRIOR TO PLACING GROUT AROUND THE PIPELINE JOINT.
4. ALL TEST LEADS AND ANODE LEADS SHALL BE RUN WITHOUT SPLICES FROM THE CONNECTION AT THE PIPE TO THE CONNECTION AT THE TEST STATION BOX.
5. ALL TEST LEADS AND ANODE TEST LEADS INSIDE THE TEST BOX SHALL BE BUNDLED TOGETHER AT 8 INCH INTERVALS WITH NYLON CABLE TIES. ALL TEST STATION LEADS SHALL BE PROVIDED WITH SUFFICIENT SLACK SO THAT THE TEST BOARD MAY BE EXTENDED A MINIMUM OF 4 FEET ABOVE THE TEST BOX.
6. ALL TEST LEADS AND ANODE LEADS (WIRE INSULATION) ARE COLOR CODED AS FOLLOWS:

TEST STATION LEADS FROM PIPE	– WHITE
REFERENCE CELL TEST LEADS	– RED
ANODE TEST LEADS	– GREEN
200' TEST LEAD	– BLUE
FOREIGN PIPE LEAD	– YELLOW
CASING	– BLACK

   ALL TEST LEADS AND ANODE LEADS SHALL BE COLOR CODED WITH COLORED WIRE INSULATION. COLORED TAPING NOT PERMITTED (TYP).

7. ALL TEST LEADS AND ANODE LEADS SHALL BE CONNECTED TO THE BRASS BOLTS ON THE TEST BOARD WITH SOLDERLESS SCREW TIGHT COPPER LUG CONNECTORS OR PRESSURE TERMINAL CONNECTORS. ALL FASTENERS (SCREWS, LUGS) SHALL BE BRASS OR COPPER.
8. ALL TEST LEADS AND ANODE TEST LEADS SHALL HAVE A MINIMUM OF 4' OF SLACK NEAR THE PIPE JOINT TO PREVENT DAMAGE DURING THE BACKFILL OPERATION.
9. ALL TEST LEADS AND ANODE TEST LEADS SHALL BE PLACED ALONG THE SIDE AND BELOW THE SPRINGLINE OF THE PIPE.
10. DUAL TEST STATIONS – LABEL ALL WIRES TO DISTINGUISH.
11. CABLE ASSEMBLIES SHALL BE USED WHEN PRACTICAL.
12. TEST STATION PLACEMENT TO BE PERPENDICULAR TO PIPE. AT INTERSECTIONS TEST STATION WIRES TO BE PLACED PARALLEL TO PIPE FOR PLACEMENT PERPENDICULAR TO PIPE AFTER ROAD EASEMENT RADIUS.
13. PRE-PACKAGED ANODES SHALL HAVE 6" LIFT OF COMPACTED NATIVE BACKFILL. AFTER BACKFILL IS IN PLACE, SATURATE THE AREA WITH TEN (10) GALLONS MINIMUM OF WATER. AFTER ALL WATER HAS BEEN ABSORBED CONTINUE BACKFILLING.
14. ALL BURIED WIRE SHALL BE PLACED IN A 4" SCH 40 PVC ELECTRICAL CONDUIT FROM THE POINT THAT THE WIRES RUN PERPENDICULAR FROM THE PIPELINE TO THE TERMINATION IN THE TEST BOX. DO NOT PLACE RIBBON IN CONDUIT. CONDUIT NOT SHOWN ON PLANS FOR CLARITY.

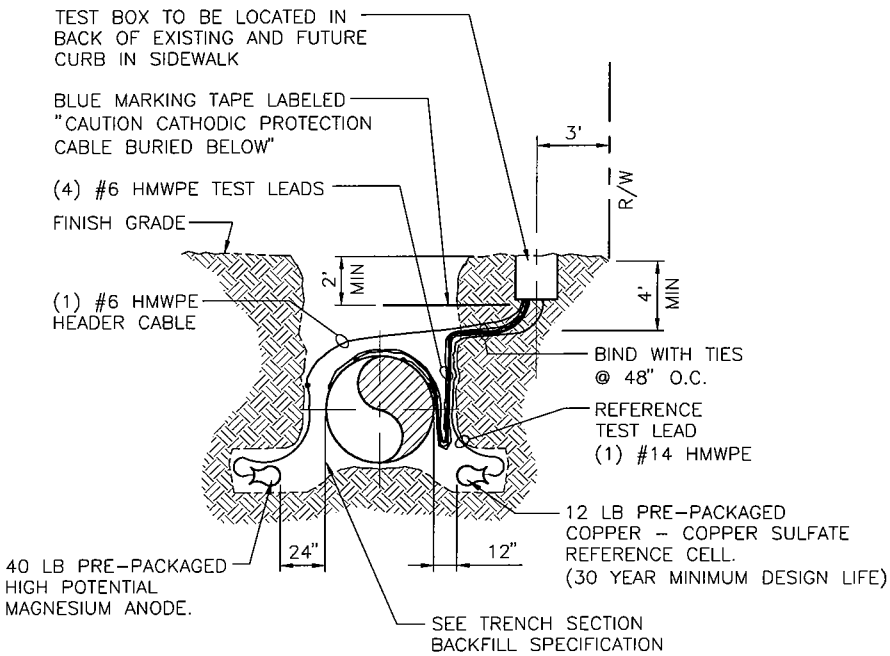

SECTION A

NOTES:

1. USE ONLY NATIVE SOIL FREE OF ROCKS AND CLODS FOR BACKFILL AROUND CELLS WITH A MINIMUM OF (10) TEN GALS OF WATER SATURATION DURING INSTALLATION. DO NOT USE SAND AS BACKFILL.
2. SUPPLY ENOUGH WIRE FROM EACH LEAD TO REACH FULL R/W WIDTH PLUS FIVE (5) ADDITIONAL FEET. COIL WIRE IN BOTTOM OF BOX.
3. TEST STATION PLACEMENT TO BE PERPENDICULAR TO PIPE, AT INTERSECTIONS, TEST STATION WIRES TO BE PLACED PARALLEL TO PIPE FOR PLACEMENT PERPENDICULAR TO PIPE AFTER ROAD EASEMENT RADIUS.

APPROXIMATE PIPELINE STATIONING OF TEST STATIONS		
DWG NO	STATION	ADDITIONAL WIRE

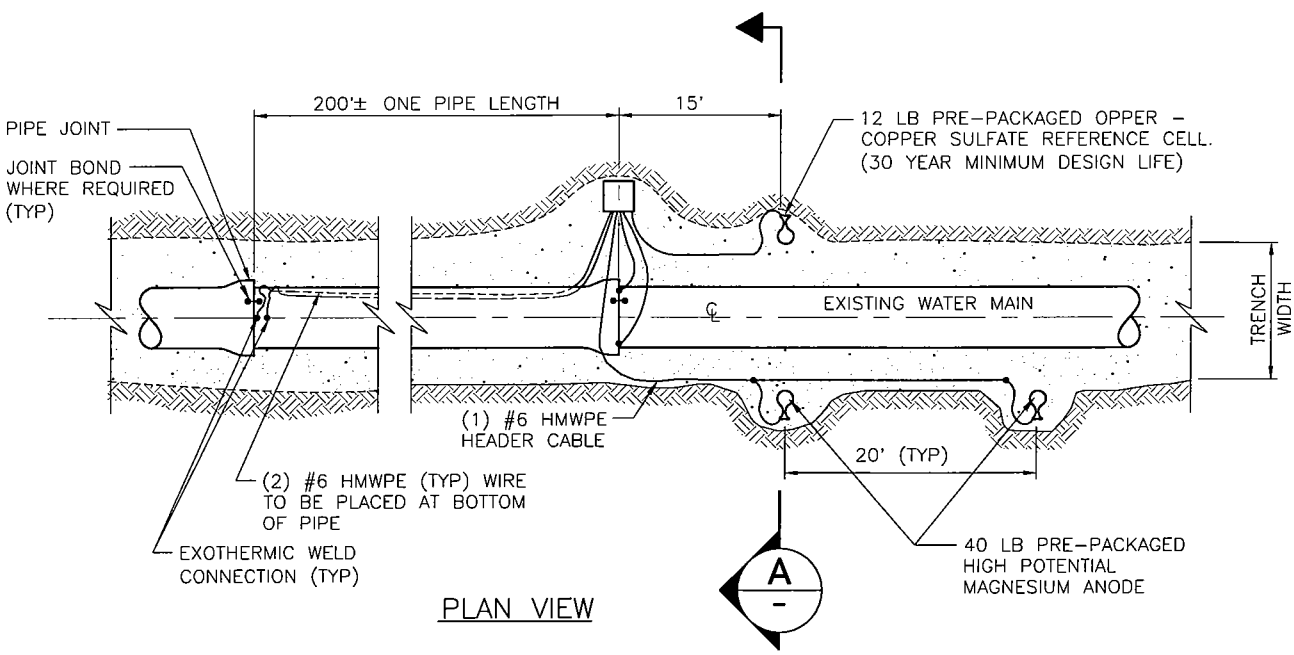

PLAN VIEW

TEST STATION INSTALLATION ON EXISTING PIPELINES WITH PRE-PACKAGED ANODES

NOT TO SCALE PL12-11 031205

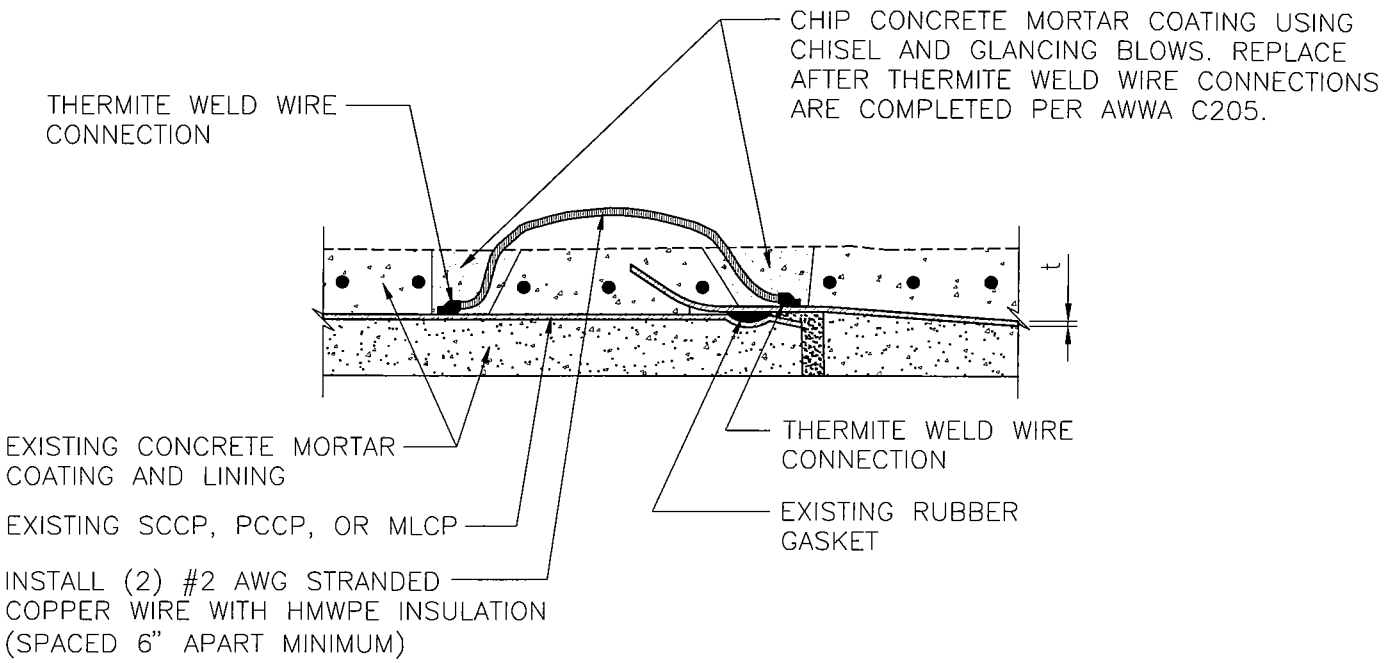

NOTE:

ALL JOINT BONDING INSTALLATIONS USING STRANDED COPPER BONDING CABLES, MAINTAIN A MIN. OF 4 TO 6 INCHES OF SLACK BETWEEN THE BONDING CABLE POINTS OF ATTACHMENT.

JOINT BONDING DETAIL FOR EXISTING SCCP, PCCP, AND MLCP

NOT TO SCALE PL12-12 031205

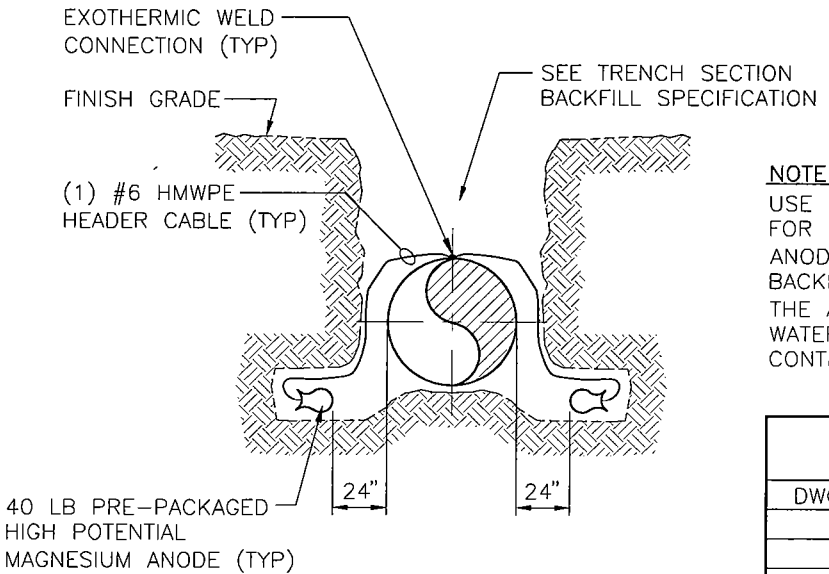

NOTE:

USE ONLY NATIVE SOIL FREE OF ROCKS AND CLODS FOR BACKFILL AROUND ANODES. PRE-PACKAGED ANODES SHALL HAVE 6" LIFT OF COMPACTED NATIVE BACKFILL. AFTER BACKFILL IS IN PLACE, SATURATE THE AREA WITH TEN (10) GALLONS MINIMUM OF WATER. AFTER ALL WATER HAS BEEN ABSORBED CONTINUE BACKFILLING.

APPROXIMATE PIPELINE STATIONING OF ANODE INSTALLATIONS		
DWG NO	STATION	ADDITIONAL WIRE

PRE-PACKAGED ANODE INSTALLATION DIRECTLY ON PIPELINE

NOT TO SCALE PL12-13 031205

DESIGNER NOTE:
USE ONLY THE DETAILS PER PROJECT REQUIREMENTS. UNUSED PORTIONS OF THE DETAIL ARE TO BE REMOVED.

FOR COMPONENT DESCRIPTIONS SEE PL13-2

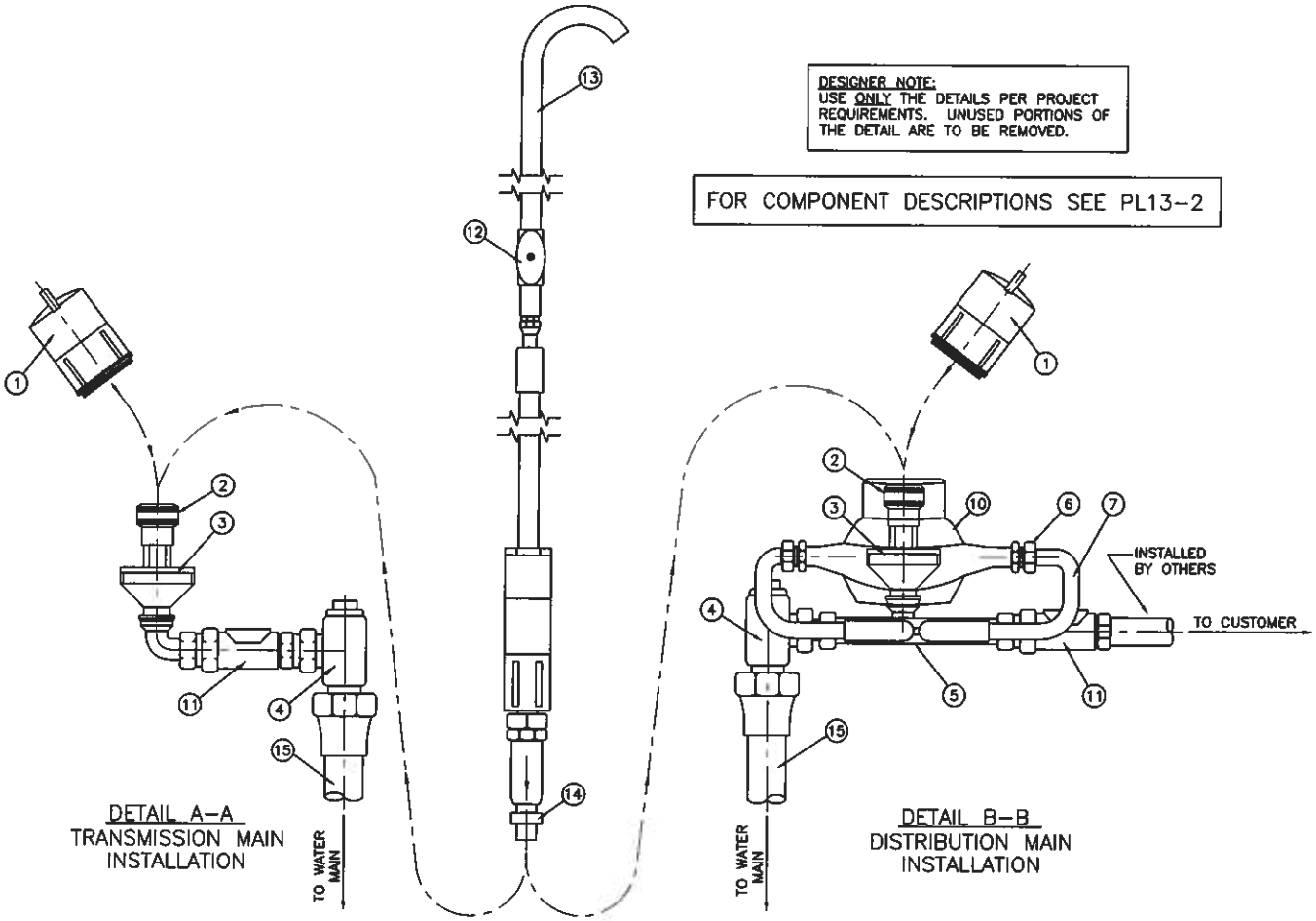

DETAIL A-A
TRANSMISSION MAIN INSTALLATION

DETAIL B-B
DISTRIBUTION MAIN INSTALLATION

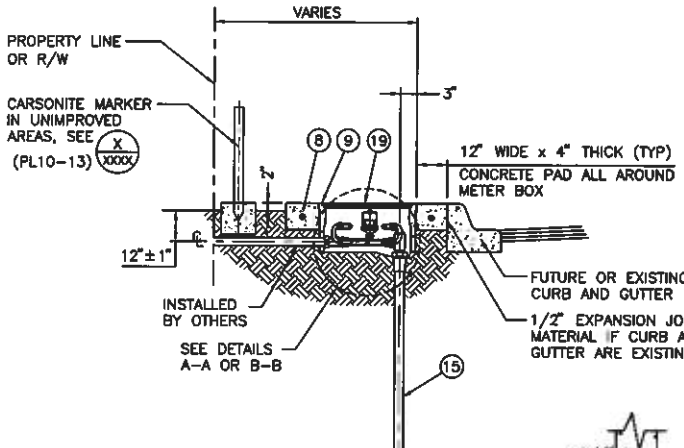

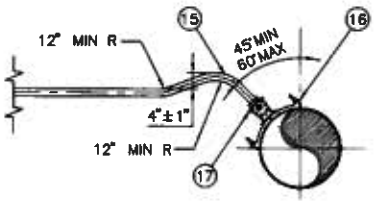

DISTRIBUTION MAIN

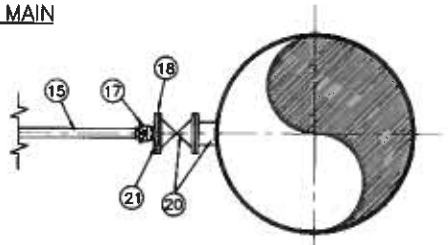

TRANSMISSION MAIN
(OUTSIDE VAULT)

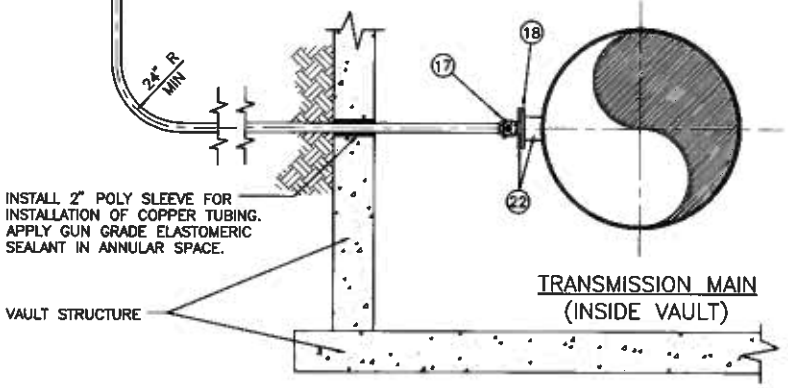

TRANSMISSION MAIN
(INSIDE VAULT)

NOTES

1. ADDITIONAL SAMPLING ASSEMBLY INFORMATION SEE SPECS SEC 15225.
2. ALL COPPER TUBING SHALL BE WRAPPED WITH TWO LAYERS OF SIX (6) MIL POLYETHYLENE AND BACKFILLED ALL AROUND WITH 4" MINIMUM OF SAND.

WATER QUALITY TEST STATION INSTALLATION

NOT TO SCALE

PL13-1 110210

COMPONENT DESCRIPTIONS

PL13-2 030905

ITEM	DESCRIPTION
1	HOUSING CAP
2	MAIN SAMPLING VALVE
3	BRASS HOUSING
4	1" x 3/4" BALL ANGLE METER STOP W/PADLOCK WING W/O LEVER HANDLE
5	BRASS BASE
6	3/4" BRASS METER NUT (W/GASKET)
7	METER SETTER (COPPER)
8	#3 REBAR IN CONCRETE COLLAR IF NO SIDEWALK
9	1" METER BOX INSTALLED AT FUTURE FINISH GRADE (WITHIN 1")
10	3/4" METER
11	DUAL CHECK VALVE BACKFLOW PREVENTER
12	THROTTLING VALVE
13	PROBE ROD W/UNTHREADED SPIGOT (MODEL 1500)
14	VALVE KEY
15	1" COPPER TUBING
16	1" SERVICE SADDLE (PVC OR DIP)
17	1" CORP STOP
18	INSULATING FLANGE, SEE DETAIL [ ] ON DWG [ ] (PL05-4)
19	"LVVWD SAMPLING STATION" MARKED ON LID
20	6" FLANGED OUTLET WITH 6" FLG GATE VALVE
21	6" x 1" THREADED BRASS REDUCING FLANGE
22	4" FLANGED OUTLET WITH 4" x 1" THREADED BRASS REDUCING FLANGE

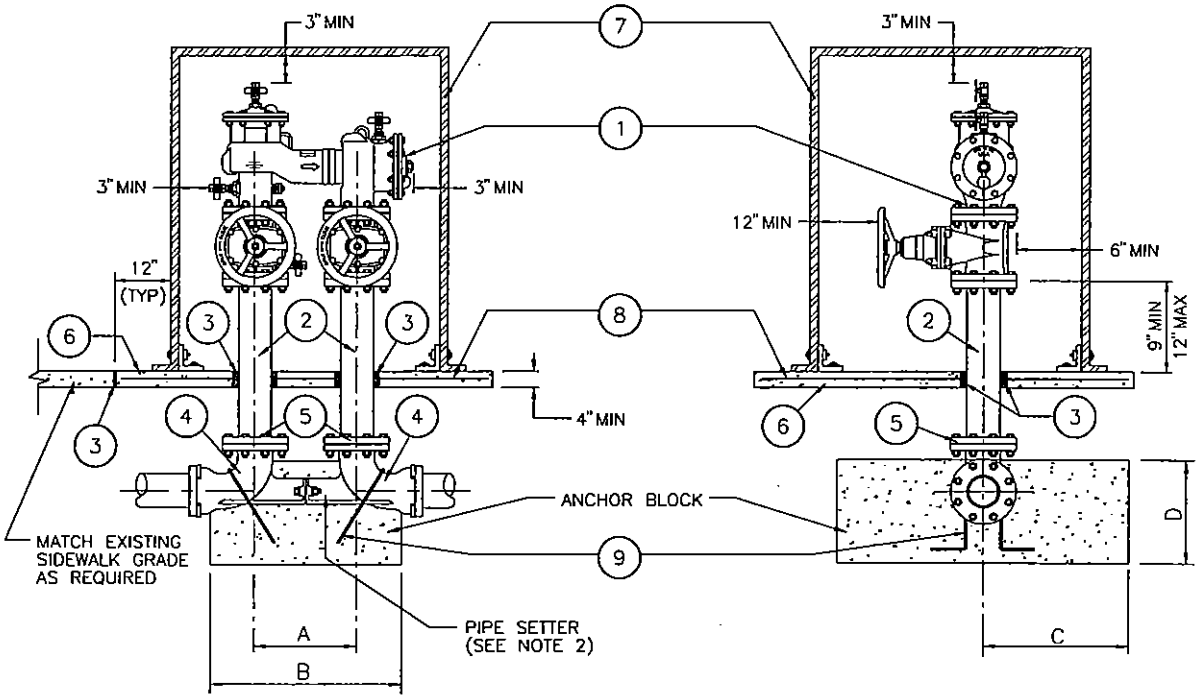

ANCHOR BLOCK SIZING REQUIREMENTS

ASSEMBLY SIZE	3"	4"	6"	8"	10"
A	12-1/2"	14"	16"	18-1/2"	21"
B	18"	21"	26"	30"	36"
C	15"	15"	21"	24"	27"
D	6"	8"	12"	16"	20"

NOTES

1. ENCLOSURE SIZE AND CONCRETE PAD TO BE DETERMINED USING MINIMUM CLEARANCES SHOWN. (CONTRACTOR TO SUBMIT SHOP DRAWINGS AS REQUIRED)
2. PIPE SETTER MAY BE OMITTED IF ALL JOINTS ARE MECHANICALLY RESTRAINED. DIFFERENCE IN ELEVATION NOT PERMITTED AT 90° BENDS BELOW GRADE.

LEGEND

(1) APPROVED REDUCED PRESSURE PRINCIPLE ASSEMBLY
APPROVED DOUBLE CHECK VALVE ASSEMBLY
APPROVED DOUBLE CHECK DETECTOR ASSEMBLY
ALL ASSEMBLIES TO BE FACTORY COATED. ABOVE GRADE PIPING TO BE PAINTED PER SPECS.

(2) FLG x PE DUCTILE IRON PIPE, PRESSURE CLASS 350.

(3) 1/4" EXPANSION JOINT MATERIAL.

(4) MJ 90° DUCTILE IRON BEND.

(5) DUCTILE IRON FLANGE RESTRAINING ADAPTER.

(6) CONCRETE PAD – 3000 PSI (PAD SIZE TO MEET ENCLOSURE MANUFACTURERS SPECIFICATIONS)

(7) APPROVED ENCLOSURE.

(8) WELDED WIRE FABRIC – W4.0 x W4.0 WIRE.

(9) NO. 4 REBAR. (WRAP EXPOSED PORTION OF REBAR WITH 10 MIL DIELECTRIC PLASTIC TAPE WITH 1/2 OVERLAP)

COMPACT BACKFLOW ASSEMBLY

NOT TO SCALE PL14-1 070703

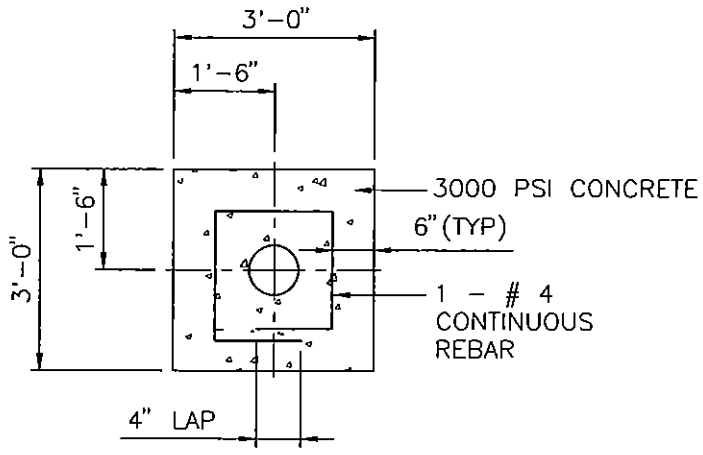

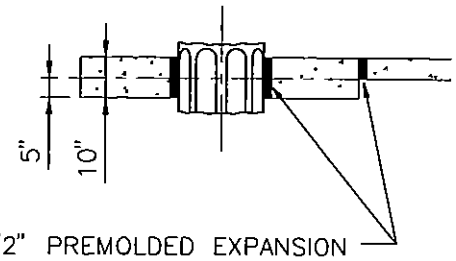

1/2" PREMOLDED EXPANSION JOINT WHERE FIRE HYDRANT PAD IS SET AGAINST EXISTING CONCRETE AND AROUND FIRE HYDRANT BARREL

NOTE:
FOR LOCATION OF FIRE HYDRANTS, AND FIRE HYDRANT PADS. SEE (PL15-2) X / XXXX

DESIGNER NOTE:
SEE PL15-5 FOR FIRE HYDRANT NOTES. DESIGNER NOTES TO BE DELETED FROM DRAWING

PAD DETAIL

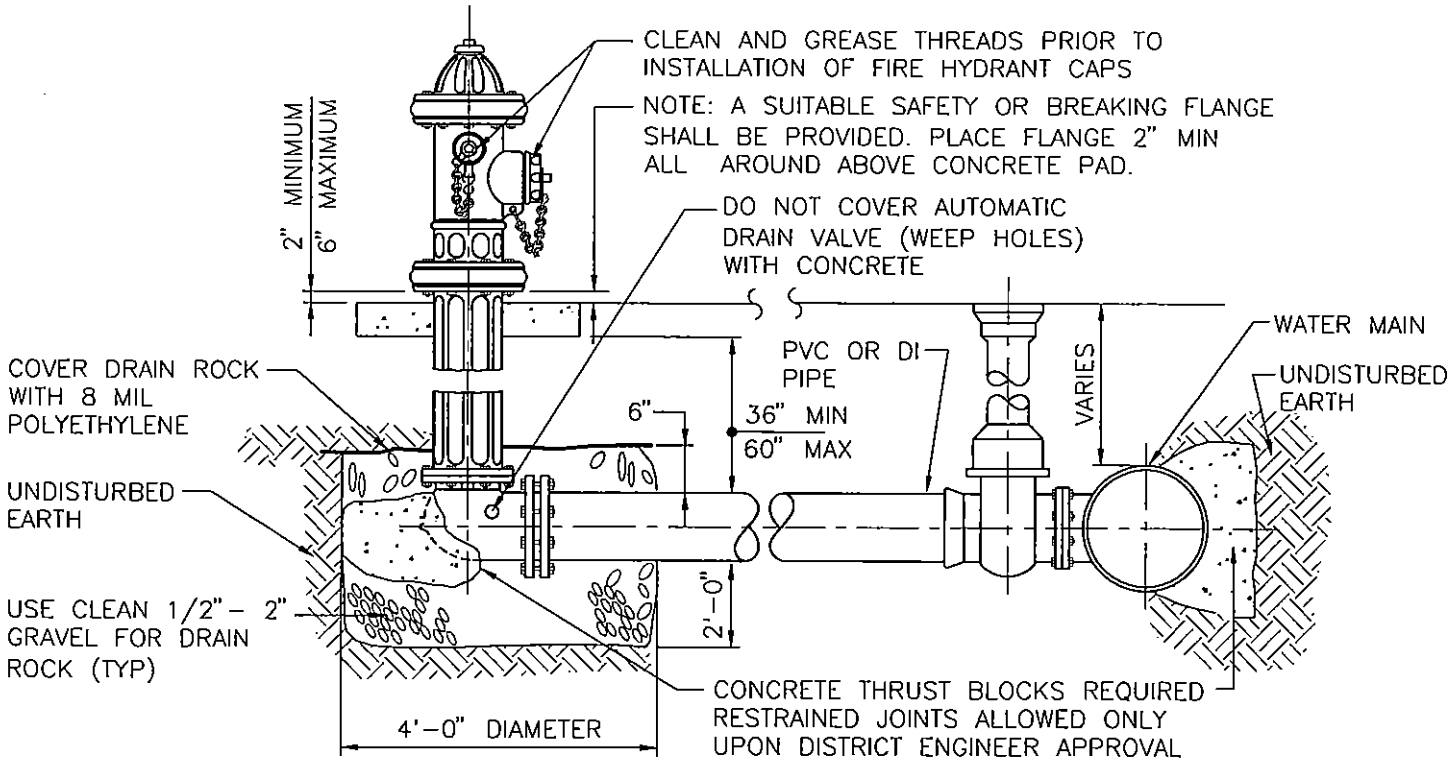

HYDRANT ASSEMBLY DETAIL

FIRE HYDRANT INSTALLATION

NOT TO SCALE PL15-1 070703

DESIGNER NOTE:
DEEP FIRE HYDRANT INSTALLATION MUST HAVE PRIOR LVVWD APPROVAL BEFORE USING WITHIN PROJECT DETAILS.

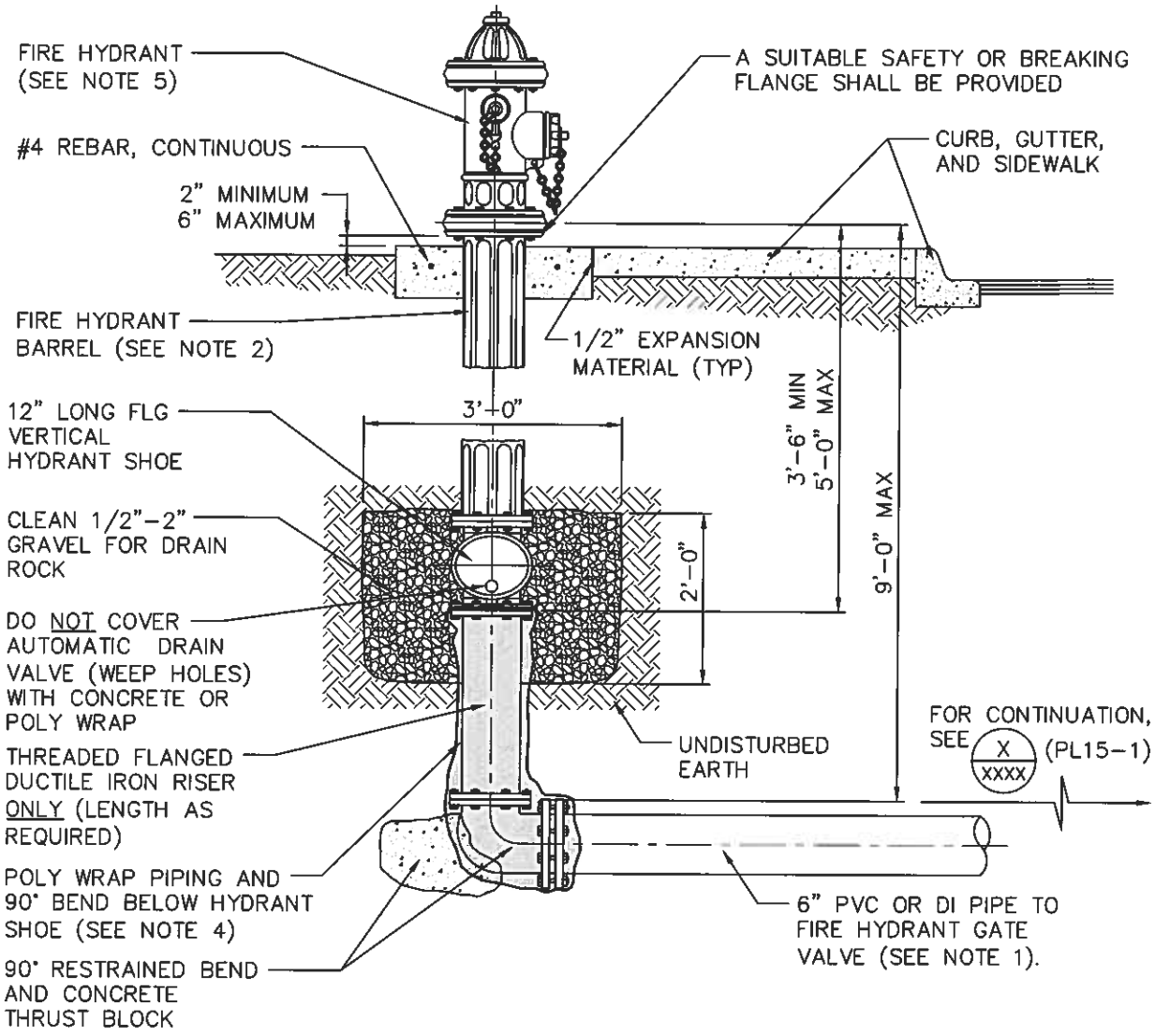

NOTES:

1. INSTALL 45° BENDS IN LATERAL AS REQUIRED IN RIGHT-OF-WAY TO ACHIEVE FIRE HYDRANT LATERAL DEPTH REQUIREMENTS. VERTICAL ADJUSTMENT BENDS ARE NOT TO BE INSTALLED UNDER CURB, GUTTER OR SIDEWALK AREAS.
2. NO FIRE HYDRANT BARREL SHALL BE LONGER THAN 5'-0".
3. WHEN FIRE HYDRANT LATERAL IS DEEPER THAN 5'-0" INSTALL VERTICAL HYDRANT SHOE AND FLG DUCTILE IRON RISER.
4. DUCTILE IRON PIPE AND FITTINGS TO BE ENCASED WITH TWO (2) LAYERS EIGHT MILS THICK POLYETHYLENE FILM. DO NOT ENCASE FIRE HYDRANT BARREL OR SHOE.
5. ADDITIONAL FIRE HYDRANT INSTALLATION REQUIREMENTS, SEE X/XXXX (PL15-1)

DEEP FIRE HYDRANT INSTALLATION

NOT TO SCALE

PL15-1A 110210

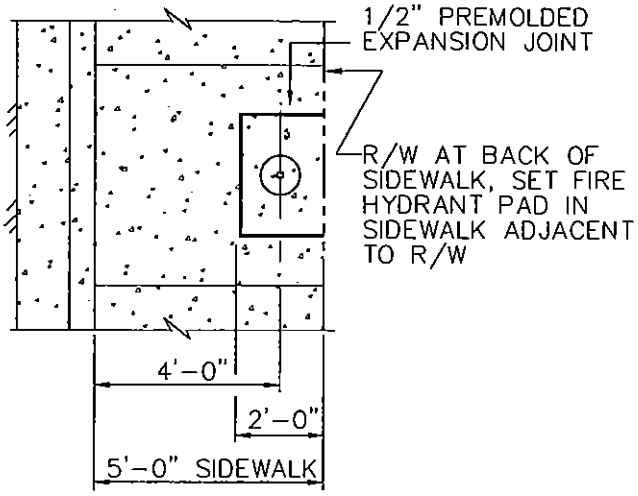

CONDITION A

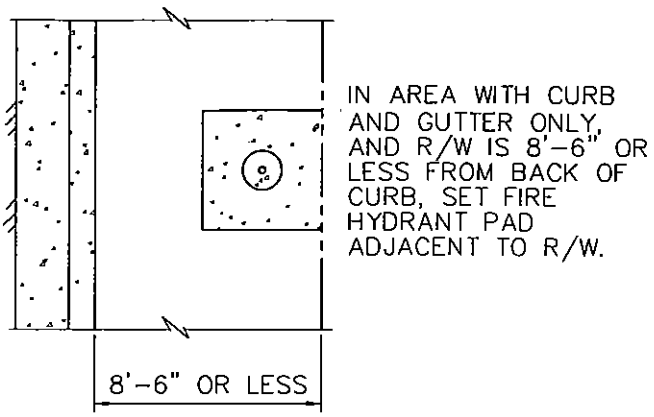

CONDITION D

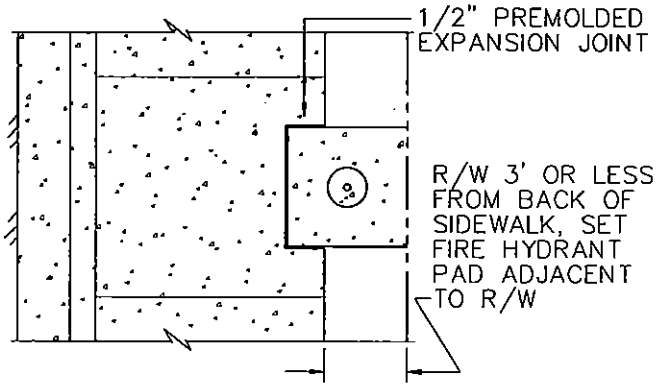

CONDITION B

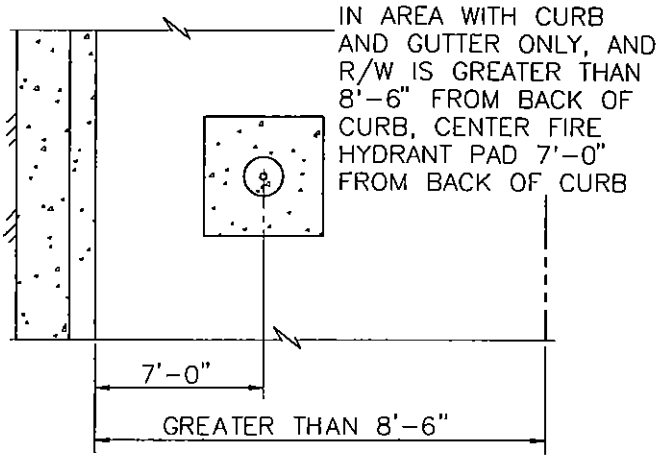

CONDITION E

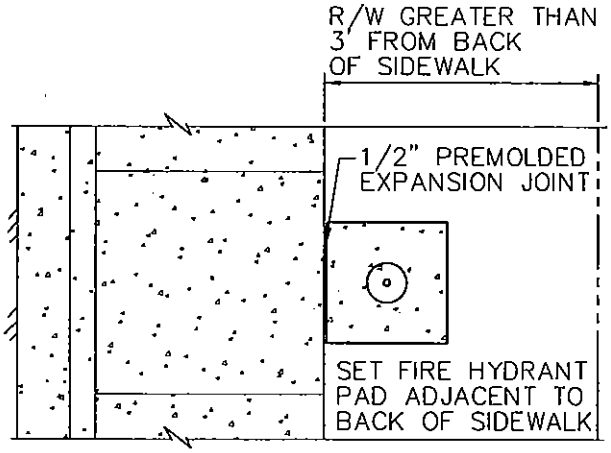

CONDITION C

IF NO SIDEWALK, CURB AND GUTTER EXISTS, SET FIRE HYDRANT PAD ADJACENT TO R/W AS SHOWN IN CONDITION D ABOVE.

CONDITION F

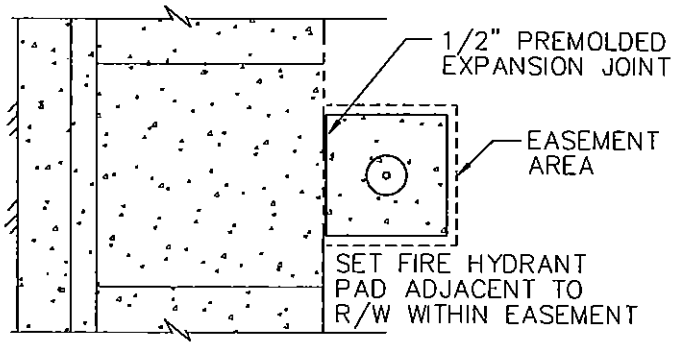

CONDITION G

FIRE HYDRANT LOCATION

NOT TO SCALE PL15-2 070703

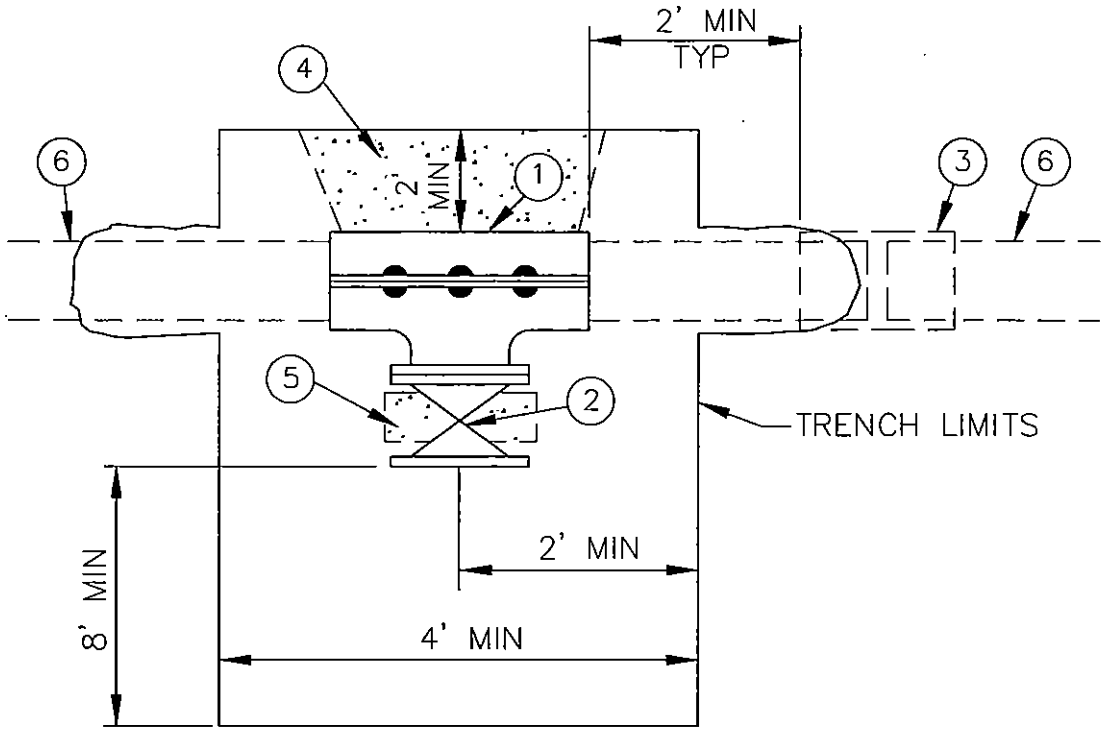

ITEM	DESCRIPTION
1	TAPPING SLEEVE
2	GATE VALVE
3	EXISTING COUPLING OR COLLAR
4	CONCRETE THRUST BLOCK
5	SUPPORT VALVE AS REQUIRED
6	EXISTING PIPE

NOTES

1. CLEARANCE FROM A COLLAR OR PIPE JOINT SHALL BE A MINIMUM OF 2 FEET FROM THE EDGE OF TAPPING SLEEVE TO COLLAR OR PIPE JOINT. THE EXISTING PIPE SHALL BE EXPOSED SUFFICIENTLY TO ENSURE THAT SUCH MINIMUM CLEARANCE IS PROVIDED.

2. TRENCH SHALL MEET ALL OSHA REQUIREMENTS.

3. GATE VALVE TO BE TEMPORARILY SUPPORTED DURING THE WET TAP PROCESS.

EXCAVATION FOR WET TAPS

NOT TO SCALE PL15-3 070703

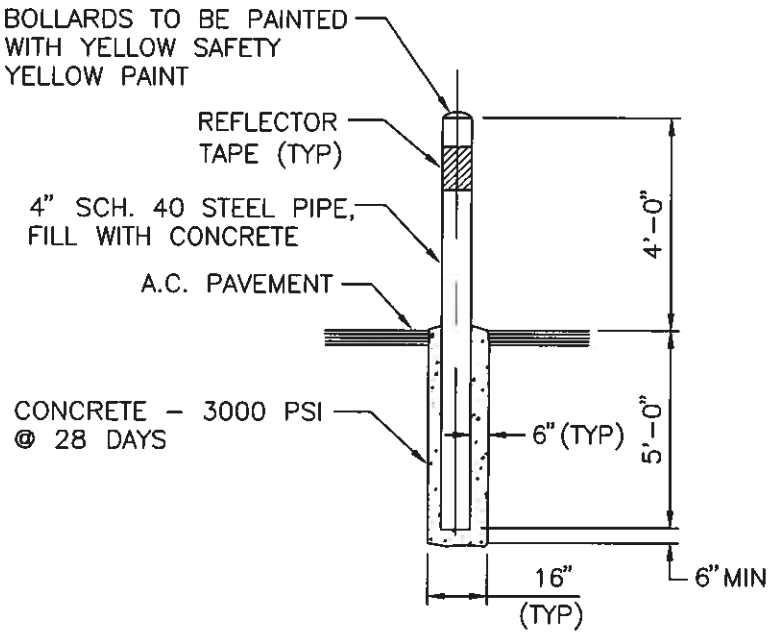

NOTES:

1. BOLLARDS ON SIDE NOT ACCESSIBLE TO VEHICLES MAY BE OMITTED BY ENGINEER.
2. PLACE 6" WIDE, YELLOW CLASS 4 REFLECTIVE TAPE (PER STANDARD SPECIFICATIONS, SECTION 716), 4" DOWN FROM TOP, FOR FULL DIAMETER ON ALL BOLLARDS.
3. CONTRACTOR TO ASSURE THAT BOLLARDS ARE PLACED TO ALLOW FULL ACCESS TO THE PROTECTED FACILITY.

VEHICULAR PROTECTION BOLLARD

NOT TO SCALE PL15–4A 012709

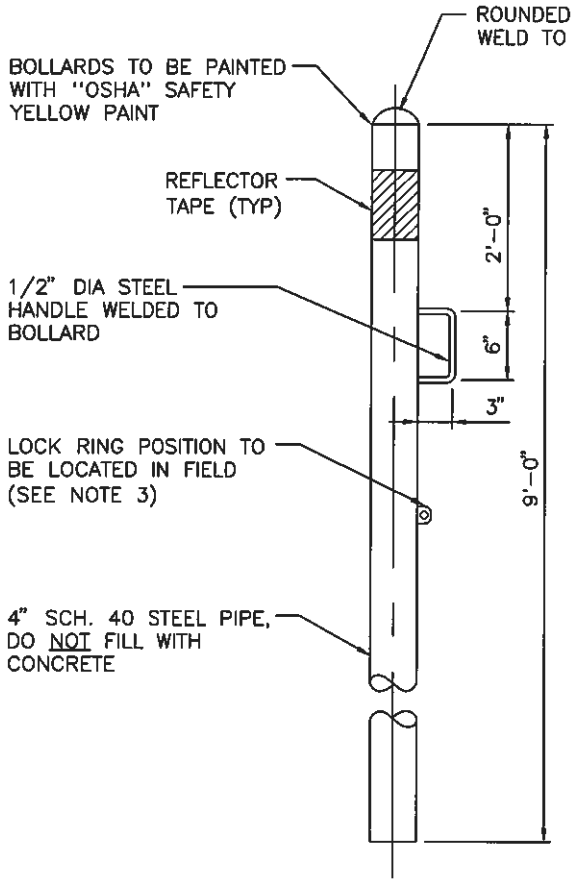

REMOVABLE BOLLARD

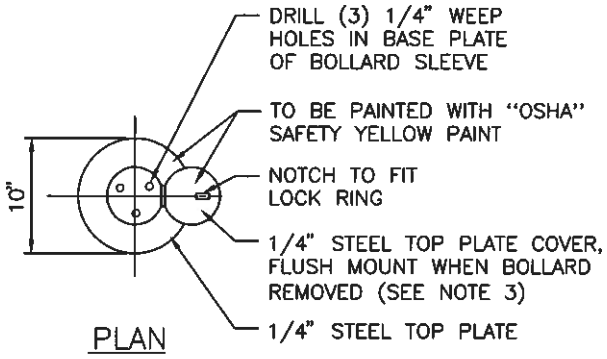

PLAN

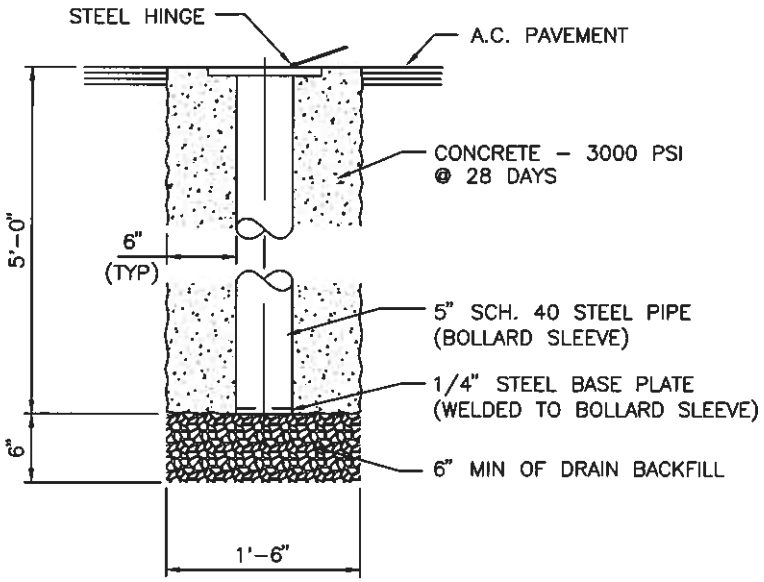

BOLLARD SLEEVE

NOTES:

1. PLACE 6" WIDE, YELLOW CLASS 4 REFLECTIVE TAPE (PER STANDARD SPECIFICATIONS, SECTION 716), 4" DOWN FROM TOP, FOR FULL DIAMETER ON ALL BOLLARDS.
2. CONTRACTOR TO ASSURE THAT BOLLARDS ARE PLACED TO ALLOW FULL ACCESS TO THE PROTECTED FACILITY.
3. INSTALL LVVWD PROVIDED LOCK AFTER INSTALLATION IS COMPLETE
4. CONTRACTOR TO SUBMIT SHOP DRAWING ON BOLLARD ASSEMBLY

REMOVABLE VEHICULAR PROTECTION BOLLARD

NOT TO SCALE PL15-4B 012709

NOTES

1. ALL WORK SHALL BE DONE IN STRICT ACCORDANCE WITH THE CITY OF LAS VEGAS FIRE DEPARTMENT OR THE CLARK COUNTY FIRE DEPARTMENT REQUIREMENTS.

2. NO HYDRANT SHALL BE LOCATED WITHIN 25 FEET OF ANY STRUCTURE OR 6 FEET OF A DRIVEWAY, POWER POLE, LIGHT STANDARD, OR ANY OTHER OBSTRUCTION. FOR WALLS, FENCE, AND PLANTER LOCATIONS, A PERIMETER AROUND THE HYDRANT MEASURING A MINIMUM OF 3 FEET FROM ITS CENTER SHALL BE MAINTAINED CLEAR OF ALL OBSTRUCTIONS AT ALL TIMES. HYDRANTS MUST BE LOCATED A MINIMUM OF 6 FEET AWAY FROM THE BEGINNING OF A TURNING RADIUS.

3. 6" FIRE HYDRANT LATERAL SHALL BE THE SAME PRESSURE CLASS AS THE DISTRIBUTION MAIN.

4. DUCTILE IRON PIPE TO BE ENCASED WITH TWO LAYERS EIGHT MILS THICK POLYETHYLENE FILM. DO NOT ENCASE FIRE HYDRANT BARREL.

5. ALL FIRE HYDRANTS SHALL BE PAINTED OSHA SAFETY YELLOW AFTER FINAL INSTALLATION.

6. ALL CURBS SHALL BE PAINTED OSHA RED 10' BOTH SIDES OF NEW FIRE HYDRANTS LOCATIONS.

7. USAGE OF FIRE HYDRANT BARREL EXTENSIONS MUST HAVE PRIOR DISTRICT APPROVAL.

8. ALL FIRE HYDRANT BARRELS LONGER THAN 60" WILL BE EVALUATED AND APPROVED BY DISTRICT ON A CASE BY CASE BASIS.

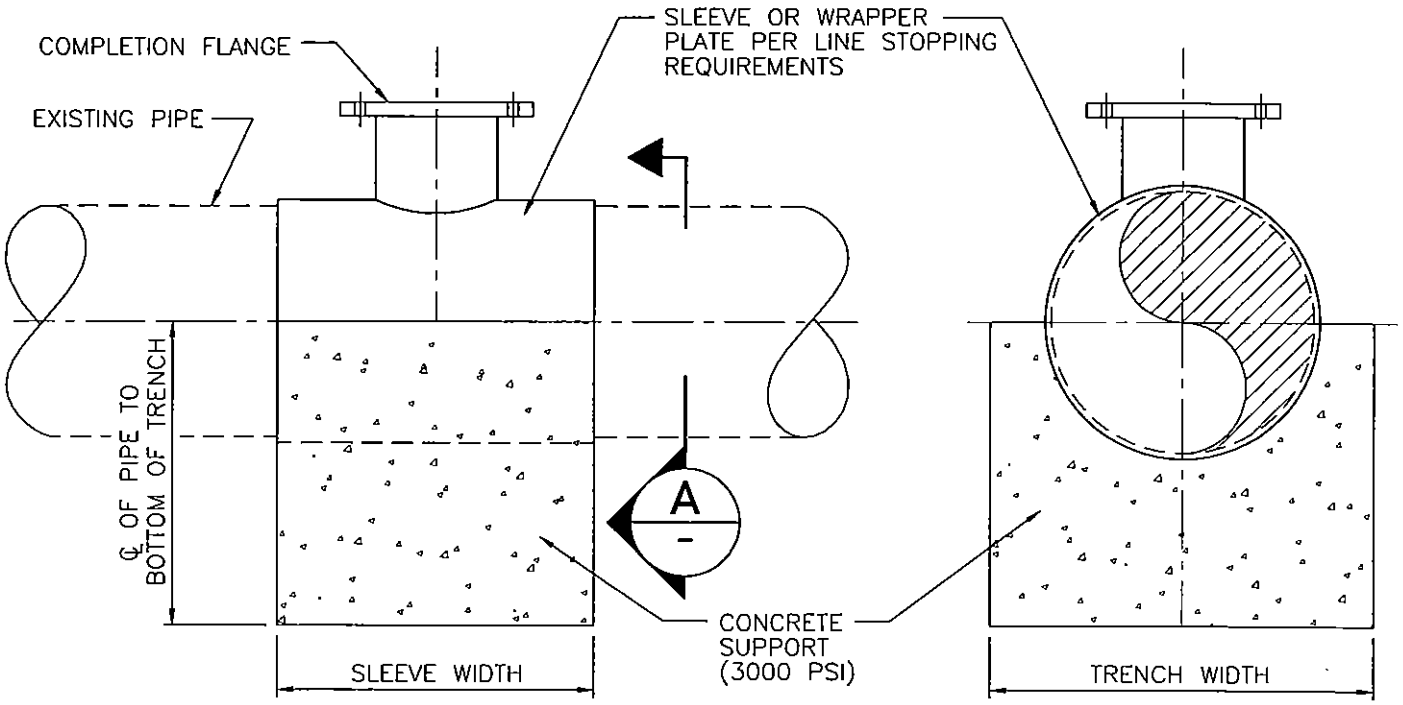

LINE STOPPING SUPPORT DETAIL

NOT TO SCALE PL15-6 070703

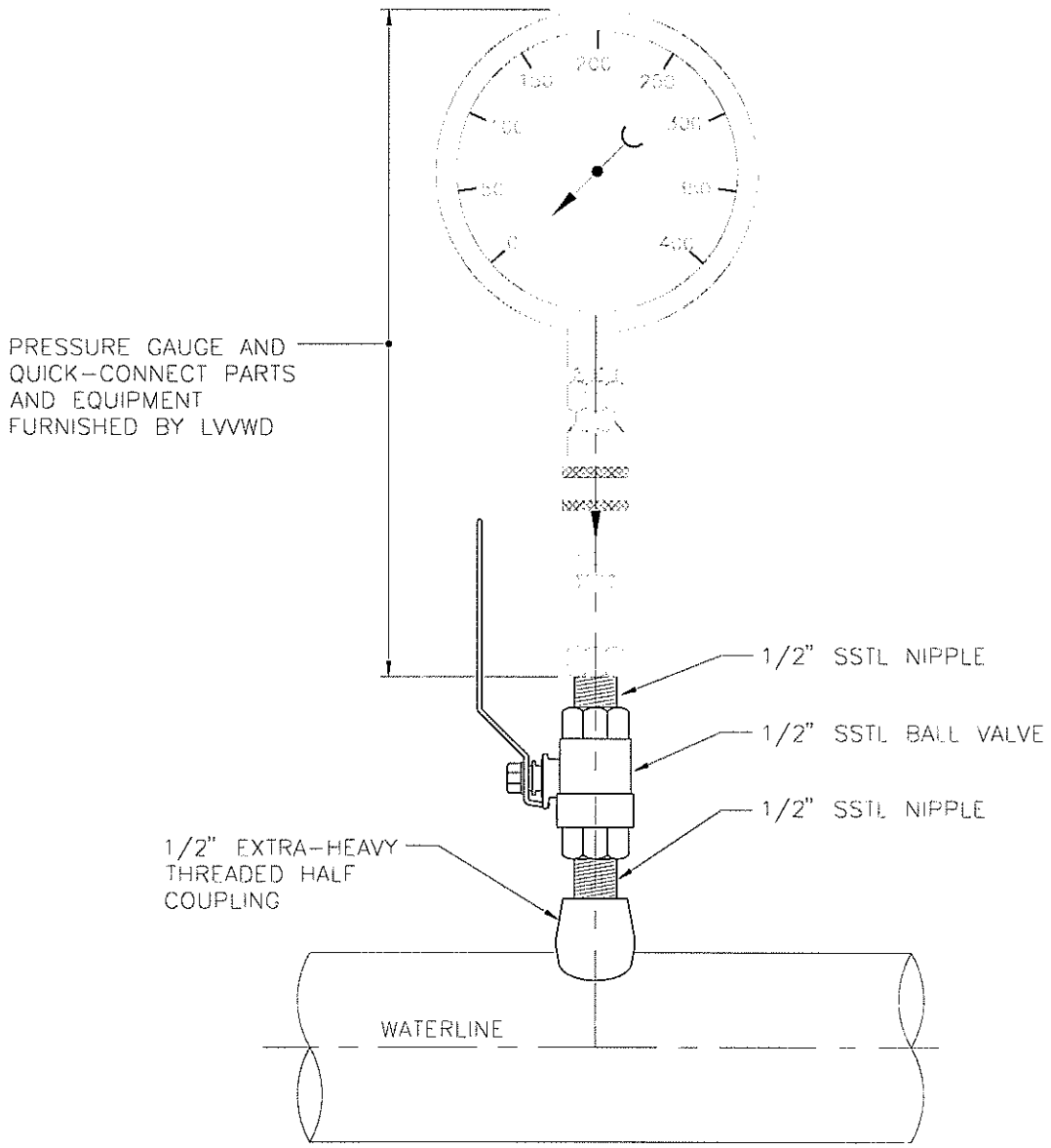

PRESSURE GAUGE CONNECTION DETAIL

NOT TO SCALE PL15-7 062007

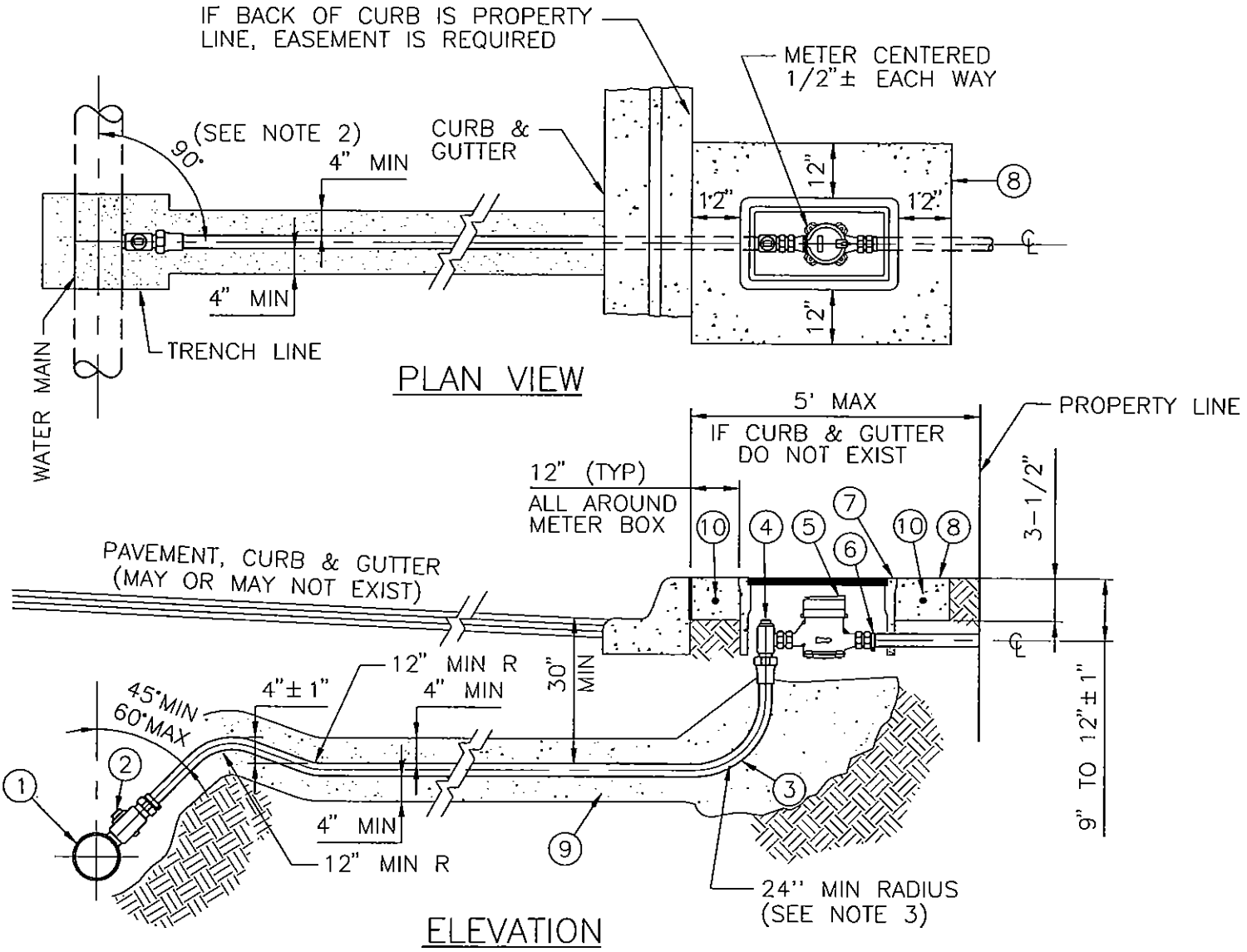

DESIGNER NOTE:
SEE PL16-2 FOR DESCRIPTIONS AND NOTES. DESIGNER NOTES TO BE DELETED FROM DRAWING

SERVICE INSTALLATION FOR COMMERCIAL AND RESIDENTIAL GREATER THAN 1/4 ACRE GROSS 5/8", 3/4", 1", 1-1/2" AND 2" METER SIZES

NOT TO SCALE

PL16-1 070703

LEGEND

(1) SERVICE SADDLE

(2) CORPORATION STOP

(3) SERVICE LATERAL. SIZE TO MATCH METER (1" MIN.)

(4) BALL ANGLE METER STOP TO MATCH METER SIZE (1" x 1" MIN) WITH LOCK WING AND WITHOUT LEVER HANDLE. FOR ALL 5/8" AND 3/4" METERS USE A 1" x 3/4" ADAPTOR.

(5) DISPLACEMENT TYPE WATER METER, DISTRICT APPROVED AND SUPPLIED, CONTRACTOR INSTALLED.

(6) TAIL PIECE COUPLING. (EXTEND TO PROPERTY LINE)

(7) METER BOX INSTALLED AS NEAR TO FUTURE FINAL GRADE POSSIBLE. (1" TYPICAL MINIMUM)

(8) FORMED CONCRETE COLLAR. 12" AROUND IF NO SIDEWALK.

(9) SAND BACKFILL FULL WIDTH OF TRENCH.

(10) #4 REBAR IN CONCRETE COLLAR IF NO SIDEWALK.

NOTES

1. ONE ADDITIONAL FLARED COUPLING, OR COMPRESSION COUPLING IS ALLOWED BETWEEN THE CORPORATION STOP, AND THE ANGLE METER STOP IF THE TOTAL LATERAL LENGTH IS GREATER THAN 40'.
2. CUL-DE-SAC SERVICE LATERALS MUST FOLLOW THE MOST DIRECT ROUTE POSSIBLE BETWEEN SERVICE SADDLE AND ANGLE METER STOP, HORIZONTAL BENDING RADIUS ALLOWED FOR 1" TUBING IS 12" MIN. AND 24" MIN. FOR 1-1/2" AND 2" TUBING. MAXIMUM DEFLECTION ANGLE ALLOWED IS 90°.
3. IF A 24" MIN. RADIUS CAN NOT BE MAINTAINED AN APPROPRIATE SIZE 90° COMPRESSION OR FLARED CONNECTION SHOULD BE USED.
4. FLUSH LATERAL PRIOR TO SETTING METER.
5. ALL METERS SHALL BE LOCATED IN EXISTING OR FUTURE SIDEWALK AREA.
6. INSTALL SAND BACKFILL AROUND WATER SERVICE LATERAL PRIOR TO INSTALLATION OF TRENCH BACKFILL WHEN CLSM OPTION IS USED OR REQUIRED.
7. ALL COPPER TUBING SHALL BE WRAPPED WITH TWO LAYERS OF SIX (6) MIL POLYETHYLENE AND BACKFILLED ALL AROUND WITH 4" MINIMUM OF SAND.

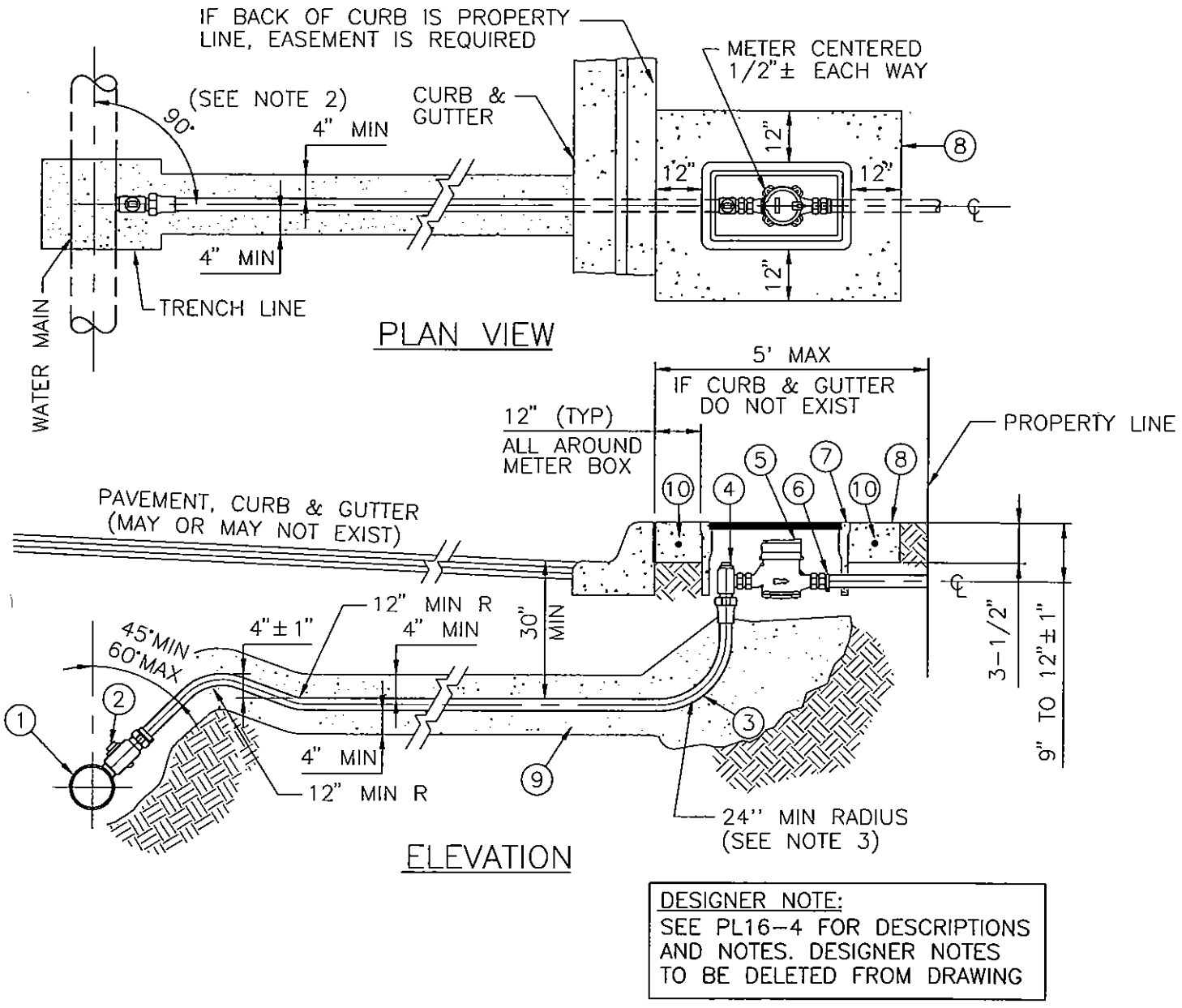

DESIGNER NOTE:
SEE PL16-4 FOR DESCRIPTIONS AND NOTES. DESIGNER NOTES TO BE DELETED FROM DRAWING

SERVICE INSTALLATION FOR RESIDENTIAL LESS THAN OR EQUAL TO 1/4 ACRE GROSS 5/8" AND 3/4" METER SIZES

NOT TO SCALE

PL16-3 070703

LEGEND

(1) SERVICE SADDLE

(2) CORPORATION STOP

(3) SERVICE LATERAL. (1" DIAMETER)

(4) UPSTREAM 1" x 3/4" BALL ANGLE METER STOP WITH LOCK WING AND WITHOUT LEVER HANDLE.

(5) DISPLACEMENT TYPE WATER METER, DISTRICT APPROVED AND SUPPLIED, CONTRACTOR INSTALLED.

(6) TAIL PIECE COUPLING. (EXTEND TO PROPERTY LINE)

(7) METER BOX INSTALLED AS NEAR TO FUTURE FINAL GRADE POSSIBLE. (3/4" TYPICAL)

(8) FORMED CONCRETE COLLAR. 12" AROUND IF NO SIDEWALK.

(9) SAND BACKFILL FULL WIDTH OF TRENCH.

(10) #4 REBAR IN CONCRETE COLLAR IF NO SIDEWALK.

NOTES

1. ONE ADDITIONAL FLARED COUPLING, OR COMPRESSION COUPLING IS ALLOWED BETWEEN THE CORPORATION STOP, AND THE ANGLE METER STOP IF THE TOTAL LATERAL LENGTH IS GREATER THAN 40'.
2. CUL-DE-SAC SERVICE LATERALS MUST FOLLOW THE MOST DIRECT ROUTE POSSIBLE BETWEEN SERVICE SADDLE AND ANGLE METER STOP, HORIZONTAL BENDING RADIUS ALLOWED FOR 1" TUBING IS 12" MIN. MAXIMUM DEFLECTION ANGLE ALLOWED IS 90°.
3. IF A 24" MIN. RADIUS CAN NOT BE MAINTAINED AN APPROPRIATE SIZE 90° COMPRESSION OR FLARED CONNECTION SHOULD BE USED.
4. FLUSH LATERAL PRIOR TO SETTING METER.
5. ALL METERS SHALL BE LOCATED IN EXISTING OR FUTURE SIDEWALK AREA.
6. INSTALL SAND BACKFILL AROUND WATER SERVICE LATERAL PRIOR TO INSTALLATION OF TRENCH BACKFILL WHEN CLSM OPTION IS USED OR REQUIRED.
7. ALL COPPER TUBING SHALL BE WRAPPED WITH TWO LAYERS OF SIX (6) MIL POLYETHYLENE AND BACKFILLED ALL AROUND WITH 4" MINIMUM OF SAND.

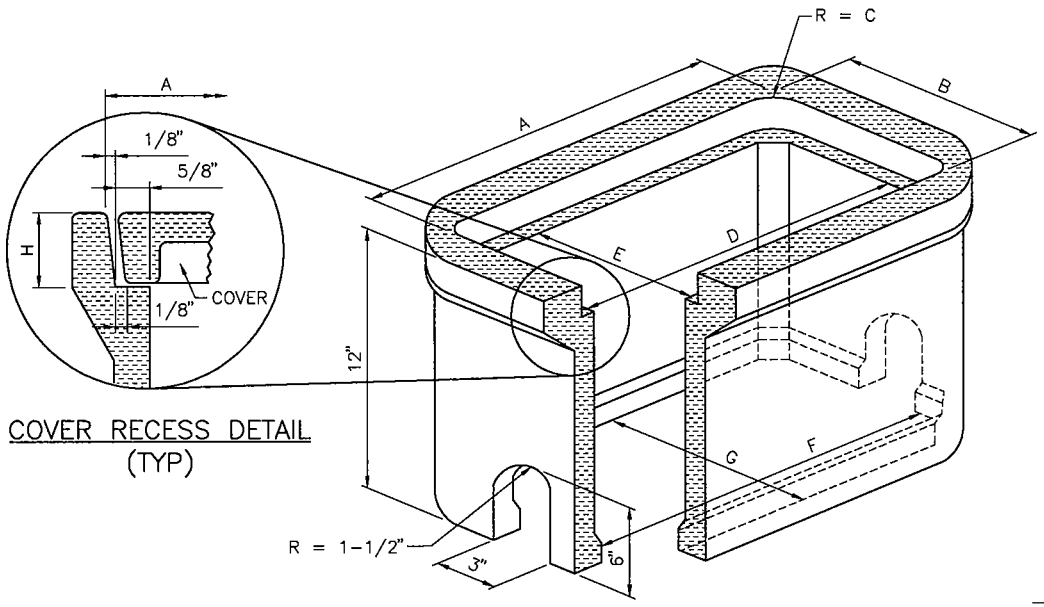

COVER RECESS DETAIL
(TYP)

SERVICE METER BOX

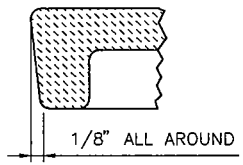

COVER SECTION (TYP)

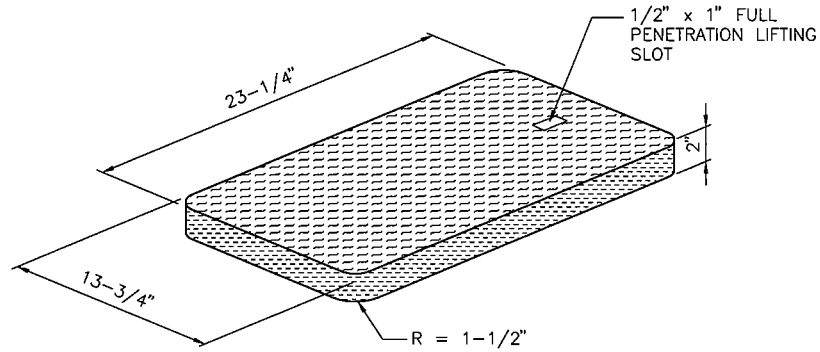

5/8", 3/4", AND 1"
METER BOX COVER

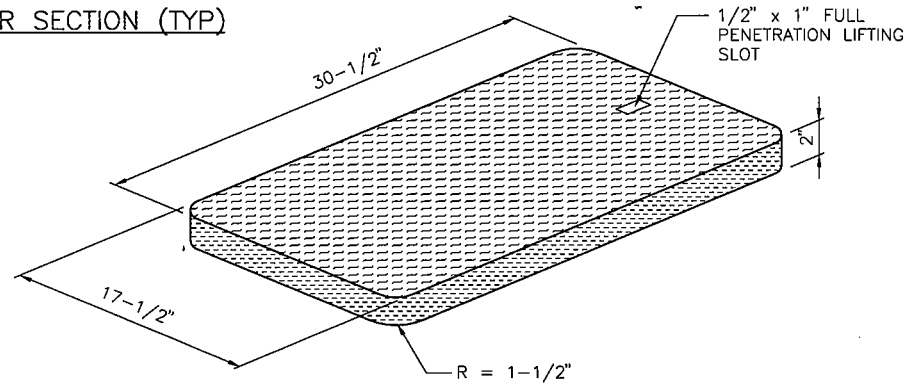

1-1/2" AND 2"
METER BOX COVER

METER BOX SIZE	A	B	C	D	E	F	G	H
5/8", 3/4", 1"	23-3/8"	13-7/8"	1-5/8"	20" MIN	11" MIN	20" MIN	11" MIN	2"
1-1/2", 2"	30-5/8"	17-5/8"	1-5/8"	29" MIN	16" MIN	29" MIN	16" MIN	2"

NOTES:

1. ALL SERVICE METER BOX COVERS SHALL BE LOAD RATED FOR WHEEL LOADS PER SPECS SEC 03481.
2. ALL DIMENSION TOLERANCES ± 1/8"
3. BOTTOM OF COVER TO BE LEVEL ALL AROUND
4. COVER SHALL BE MARKED "WATER"
5. SHOW MANUFACTURE'S NAME ON TOP OF COVER
6. CONTRACTOR TO SUBMIT SHOP DRAWING FOR METER BOX USING ABOVE DETAIL FOR METER BOX SPECIFICATIONS

METER BOX DETAIL

NOT TO SCALE PL16-5 122704

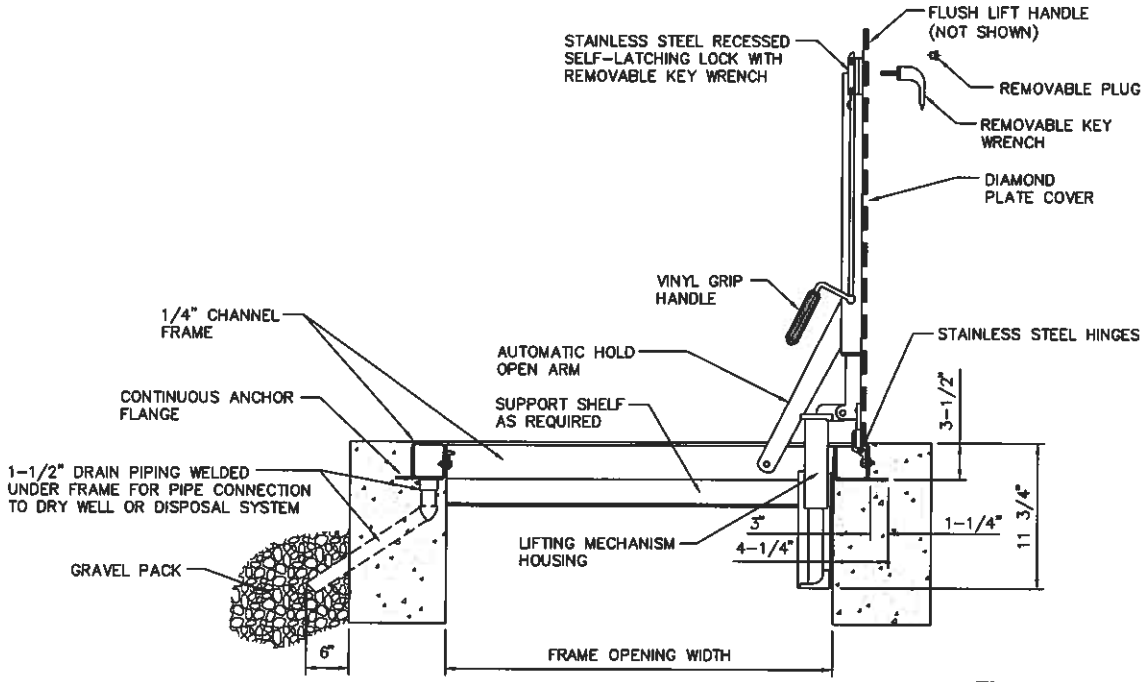

SECTION A

LOADING TYPE	LOAD REQUIREMENT
PEDESTRIAN LOADING (CHANNEL STIFFENERS AND SUPPORT SHELF NOT REQUIRED)	300 PSF
FULL TRAFFIC VEHICLE LOADING	16,000 LB WHEEL LOAD

NOTES:

1. USE DOUBLE DOOR ACCESS HATCH WHEN OPENING IS LARGER THAN 42" IN EITHER DIRECTION.
2. INSTALL DISTRICT PROVIDED LOCK AS REQUIRED

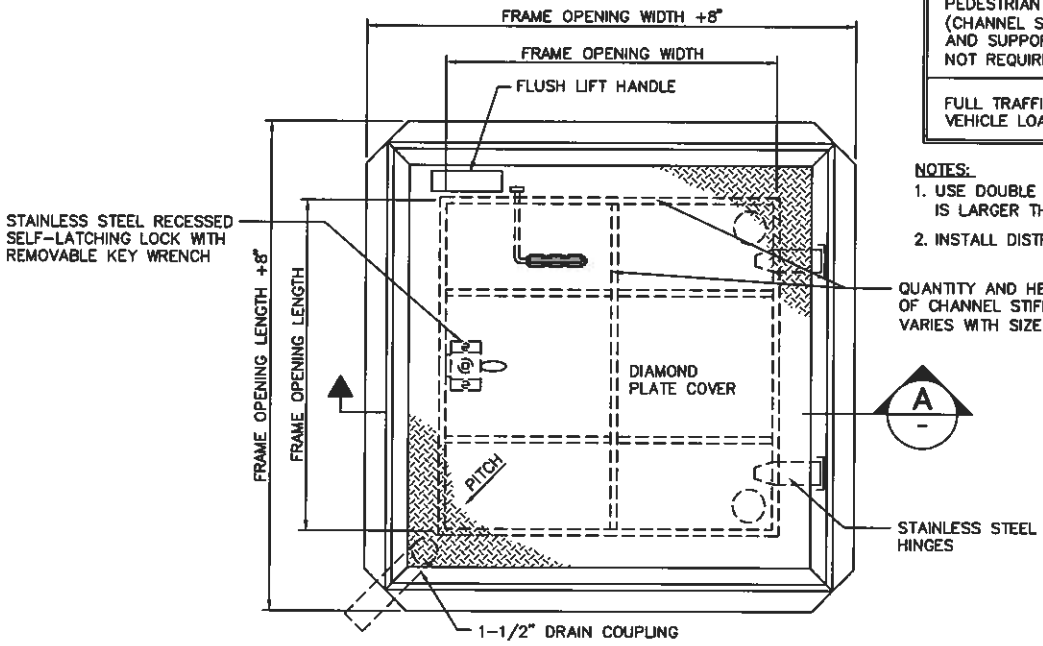

PLAN VIEW

SINGLE DOOR ACCESS HATCH

NOT TO SCALE PL17-1 112309

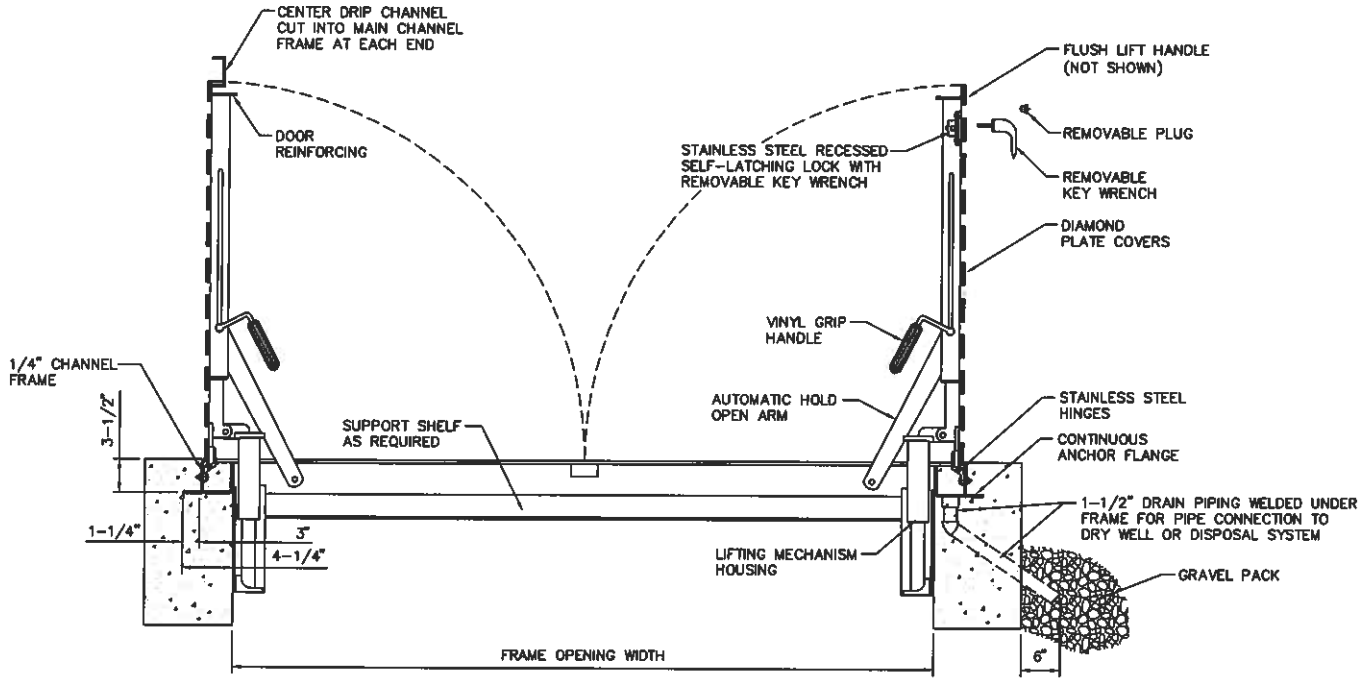

SECTION B

LOADING TYPE	LOAD REQUIREMENT
PEDESTRIAN LOADING (CHANNEL STIFFENERS AND SUPPORT SHELF NOT REQUIRED)	300 PSF
INCIDENTAL TRAFFIC VEHICLE LOADING (RESERVOIR USE ONLY)	8,000 LB WHEEL LOAD MAX
FULL TRAFFIC VEHICLE LOADING	16,000 LB WHEEL LOAD

NOTES:
1. DOUBLE DOOR ACCESS HATCHES SHALL HAVE FALL PROTECTION CHAINS INSTALLED.
2. INSTALL DISTRICT PROVIDED LOCK AS REQUIRED

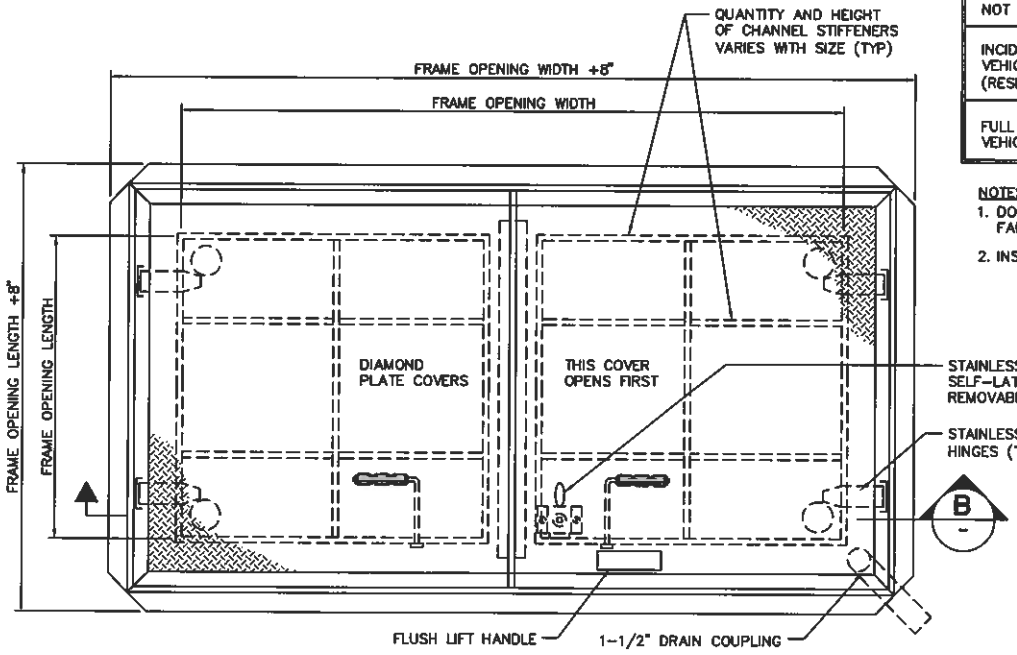

PLAN VIEW

DOUBLE DOOR ACCESS HATCH

NOT TO SCALE PL17-2 112309

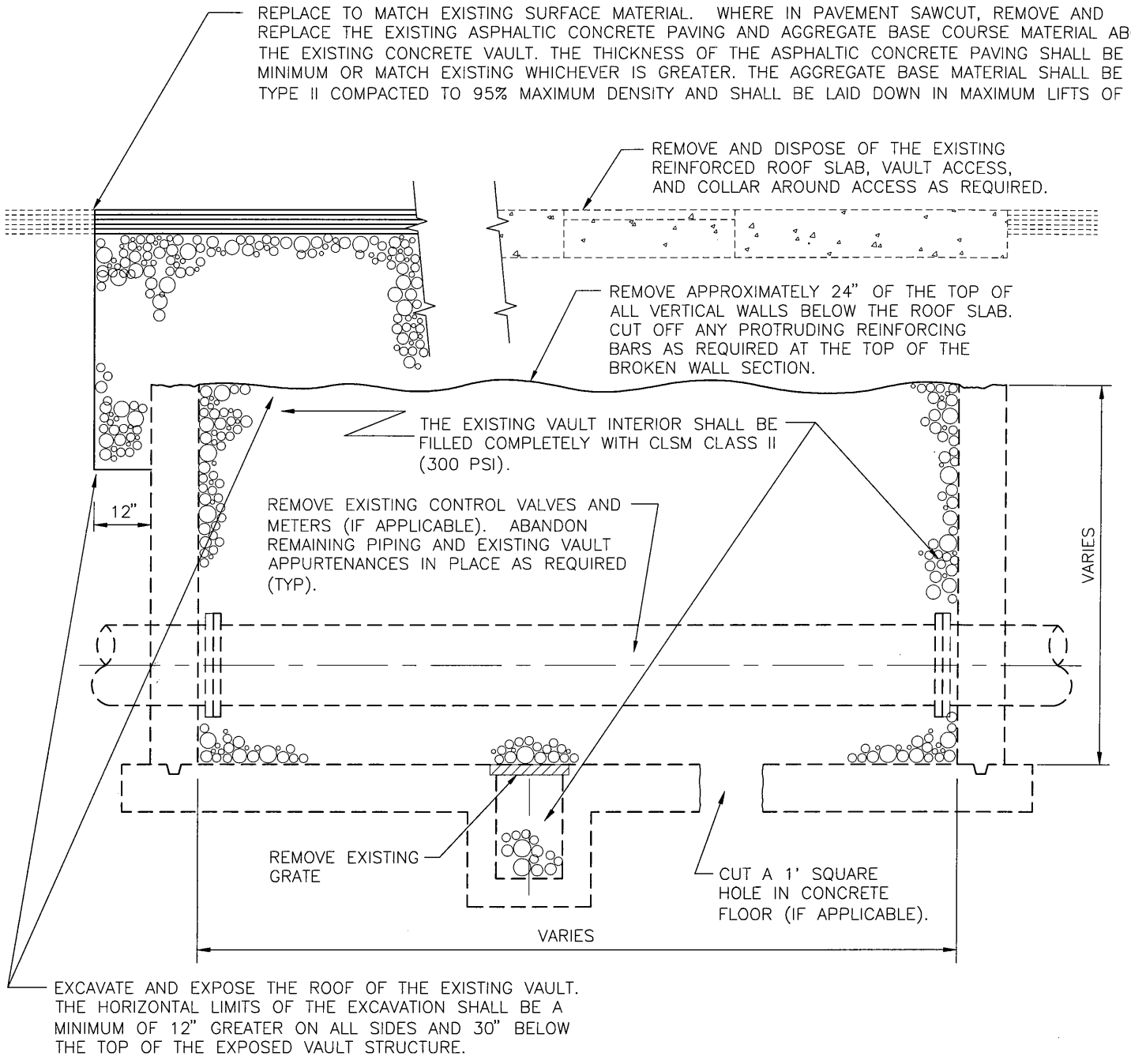

EXISTING VAULT STRUCTURE ABANDONMENT

NOT TO SCALE

PL18-1 111003

LAS VEGAS VALLEY WATER DISTRICT
DESIGN DETAIL STANDARDS

TABLE OF CONTENTS

DESCRIPTION	REV. DATE	DWG NO.
RESERVOIRS		
CIVIL		
Subgrade Preparation	07-08-03	RC01-1
Construction Sign	04-20-05	RC02-1
Not Used		RC03-1
Roof Loading Sign	04-20-07	RC03-2
No Trespassing Sign	12-04-06	RC04-1
Concrete Cut-Off Wall	07-08-03	RC05-1
Multiple Pipe Encasement	07-08-03	RC06-1
Single Pipe Encasement	07-08-03	RC06-2
Wall Underdrain Outlet-Elevation	07-08-03	RC07-1
Wall Underdrain	09-01-09	RC08-1
Floor Underdrain	09-01-09	RC09-1
MECHANICAL		
Sample Pump	08-31-09	RM01-1
Floor Restraint	07-08-03	RM01-2
Anode	07-08-03	RM02-1
Washdown Riser	07-08-03	RM03-1
Pipe Clamp	07-08-03	RM03-2
Expansion Joint	07-08-03	RM03-3
Standard Clamp Spacing	07-08-03	RM03-4
Typical Corner	07-08-03	RM03-5
Ring Flange	07-08-03	RM04-1
Staff Gauge	07-20-06	RM05-1
Column Row Identification	08-26-08	RM05-2
Number and Gauge Marker	07-08-03	RM05-3
Valve Vault Ventilation Piping	07-08-03	RM06-1
Reservoir – Valve Stem Extension Detail	08-03-06	RM07-1
STRUCTURAL		
6-Inch Centerbulb Waterstop	07-08-03	RS01-1
6-Inch Flat Strip Waterstop	07-08-03	RS02-1
Controlled Crack at Valleys	07-08-03	RS03-1
Crack Repair	07-08-03	RS04-1
Floor Slab Construction Joint	03-15-01	RS05-1
Vertical Wall Construction Joint	07-08-03	RS06-1
Roof Slab Construction Joint	07-08-03	RS07-1
Form Bevel	07-08-03	RS08-1
Wall-Formed Sealant Groove	07-08-03	RS09-1
Floor Slab-Formed Sealant Groove	07-08-03	RS10-1
Sealant Fillet	07-08-03	RS11-1
Reservoir Floor Plan	07-13-06	RS12-1

LAS VEGAS VALLEY WATER DISTRICT
DESIGN DETAIL STANDARDS

TABLE OF CONTENTS

DESCRIPTION	REV. DATE	DWG NO.
Roof Plan	07-13-06	RS12-2
Typical Section - 20 MG Reservoir – Two Basin	07-18-06	RS12-A
Typical Section - 10 MG Reservoir – Single Basin	07-18-06	RS12-B
Roof Slab Reinforcement	07-18-06	RS12-C
Reservoir Survey Monument	04-14-05	RS12-3
Roof Thimble	06-19-08	RS12-4
Section	06-19-08	RS12-4A
Sampling Port Detail	06-08-05	RS12-5A
Sampling Port Lid Detail	05-27-05	RS12-5B
Sampling Port Isometric View	05-27-05	RS12-5C
Sampling Port Cylinder	05-27-05	RS12-5D
Sampling Port Lid	05-27-05	RS12-5E
Internal Hinge Assembly In Close Position	04-21-05	RS12-5F
Reservoir Vent	09-08-08	RS12-6
Detail – Backing Plate Installation	02-14-06	RS12-6A
Detail – Vent Opening	09-08-08	RS12-6B
Detail – Backing Plate	02-14-06	RS12-6C
Detail – Security Screen	02-14-06	RS12-6D
Reservoir Wall Flange for MLCP	08-03-06	RS13-1
Not Used		RS14-1
Pipe Penetration	07-08-03	RS15-1
Reservoir Vent Roof Reinforcement	05-25-04	RS16-1
Reservoir Access Hatch	06-19-08	RS17-1
Reservoir Access Hatch	06-18-08	RS17-1A
Section	06-18-08	RS17-1B
Isometric View	06-18-08	RS17-1C
Aluminum Cover	06-18-08	RS17-2
Aluminum Handle	06-18-08	RS17-2A

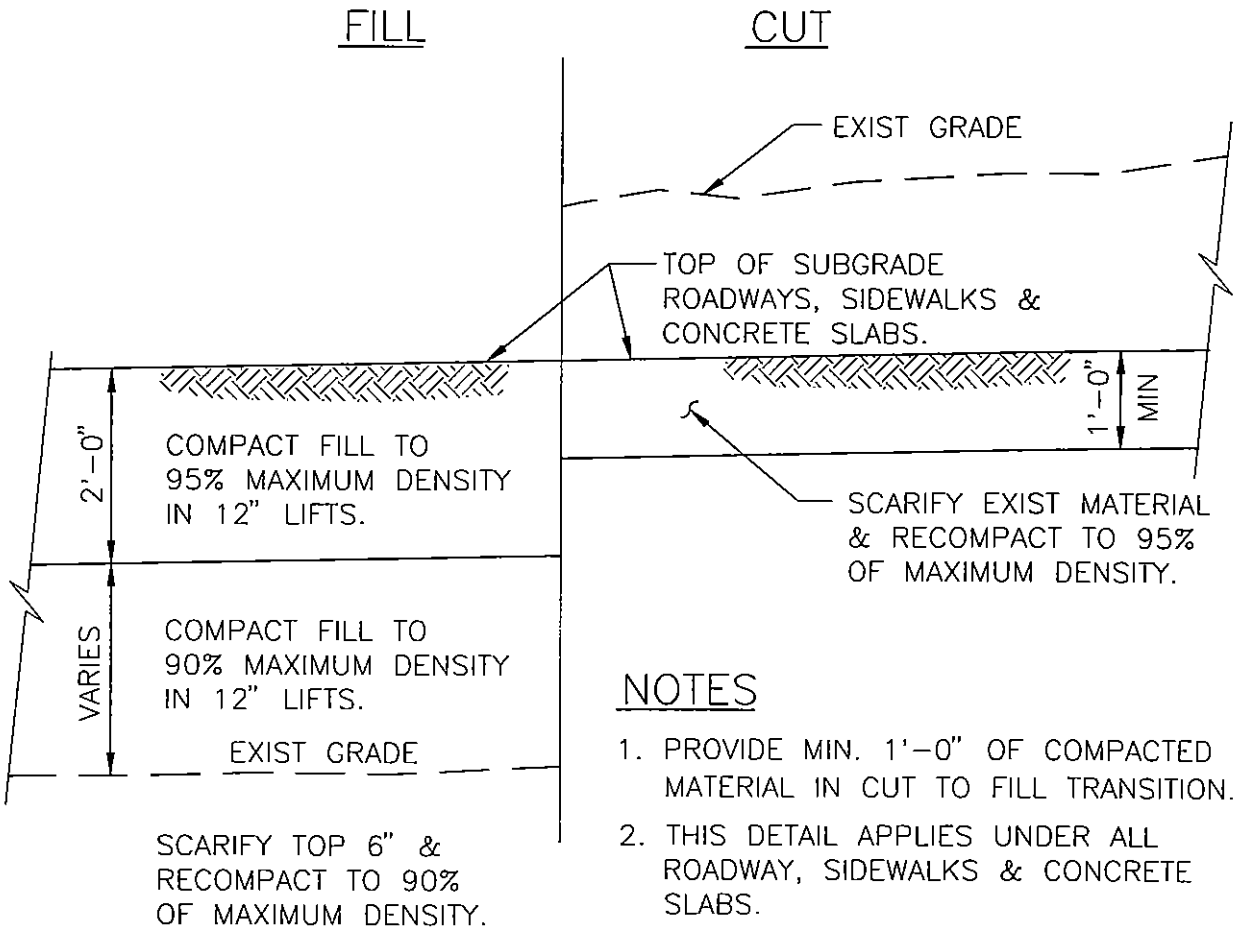

NOTES

1. PROVIDE MIN. 1'-0" OF COMPACTED MATERIAL IN CUT TO FILL TRANSITION.
2. THIS DETAIL APPLIES UNDER ALL ROADWAY, SIDEWALKS & CONCRETE SLABS.

SUBGRADE PREPARATION

NOT TO SCALE

RC01-1 070803

LEFT
LEGEND
A = 2"
B = 3"
D = 4"
E = 5"
G = 7"
I = 1'–10"

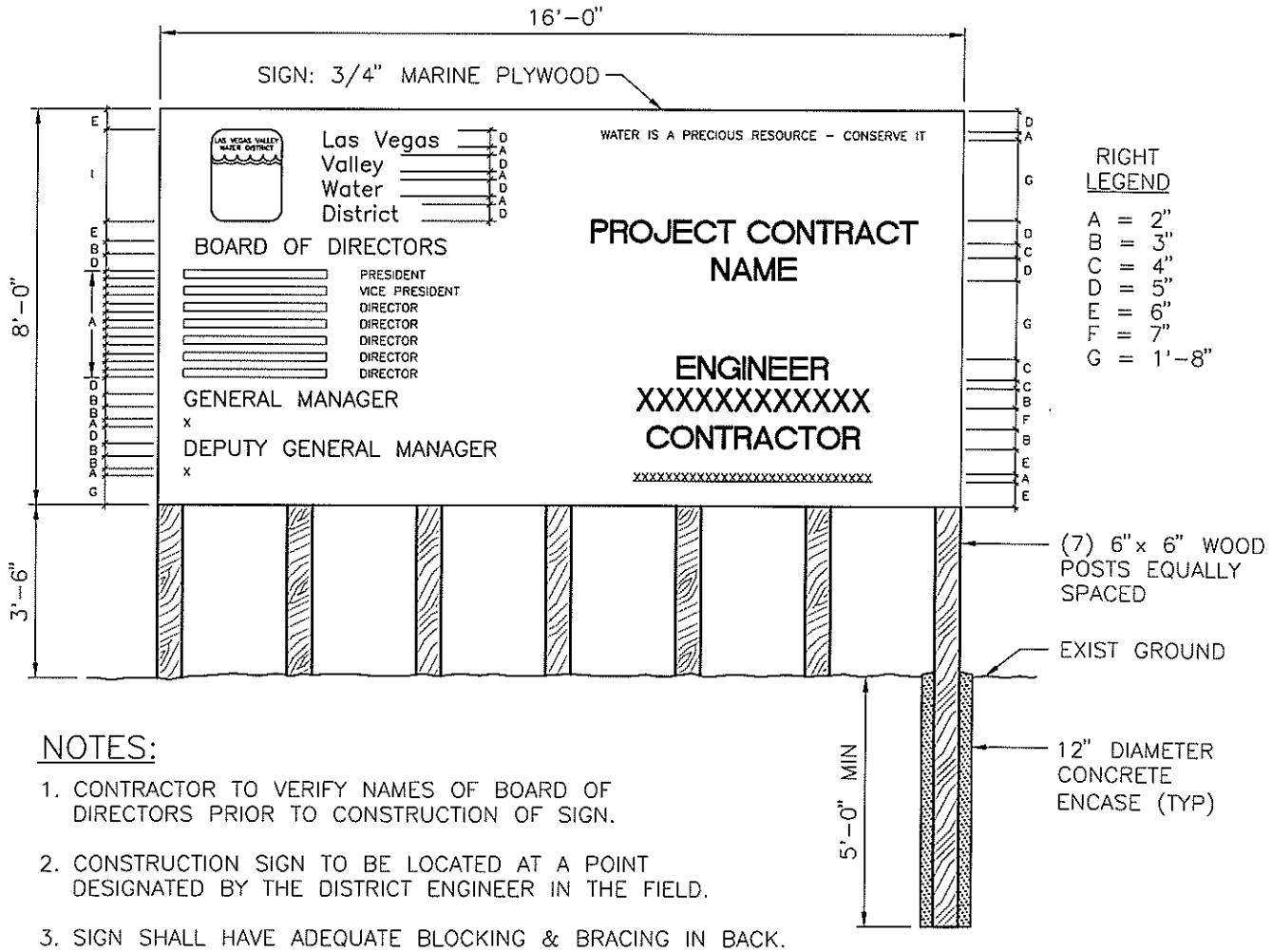

RIGHT
LEGEND
A = 2"
B = 3"
C = 4"
D = 5"
E = 6"
F = 7"
G = 1'–8"

NOTES:

1. CONTRACTOR TO VERIFY NAMES OF BOARD OF DIRECTORS PRIOR TO CONSTRUCTION OF SIGN.
2. CONSTRUCTION SIGN TO BE LOCATED AT A POINT DESIGNATED BY THE DISTRICT ENGINEER IN THE FIELD.
3. SIGN SHALL HAVE ADEQUATE BLOCKING & BRACING IN BACK.
4. CONTRACTOR TO BE RESPONSIBLE FOR MAINTAINING CORRECT INFORMATION ON SIGN DURING CONSTRUCTION.
5. SIGN WILL BE CONSTRUCTED WITH BLACK LETTERS ON WHITE BACKGROUND AND ALL LETTERS TO BE PAINTED ON SIGN.
6. SIGN SHALL DISPLAY A CURRENT TELEPHONE NUMBER FOR SECURITY CONTRACTOR.
7. CONTRACTOR SHALL REMOVE SIGN AT CONSTRUCTION COMPLETION.
8. SIGN SHALL BE IN COMPLIANCE WITH ALL APPLICABLE CLV OR CLARK COUNTY SIGN CODE OR ORDINANCE REQUIREMENTS.

CONSTRUCTION SIGN

NOT TO SCALE RC02–1 042205

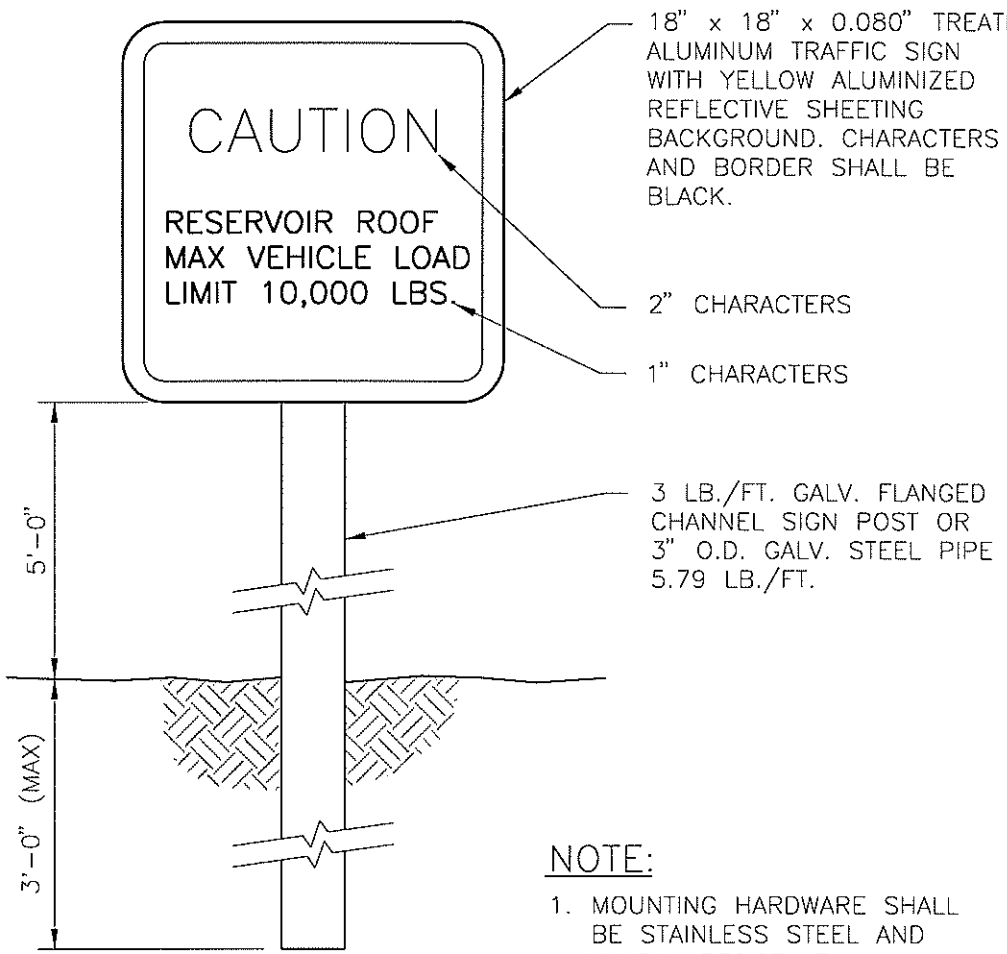

NOTE:

1. MOUNTING HARDWARE SHALL BE STAINLESS STEEL AND VANDAL RESISTANT.

ROOF LOADING SIGN

NOT TO SCALE RC03-2 042007

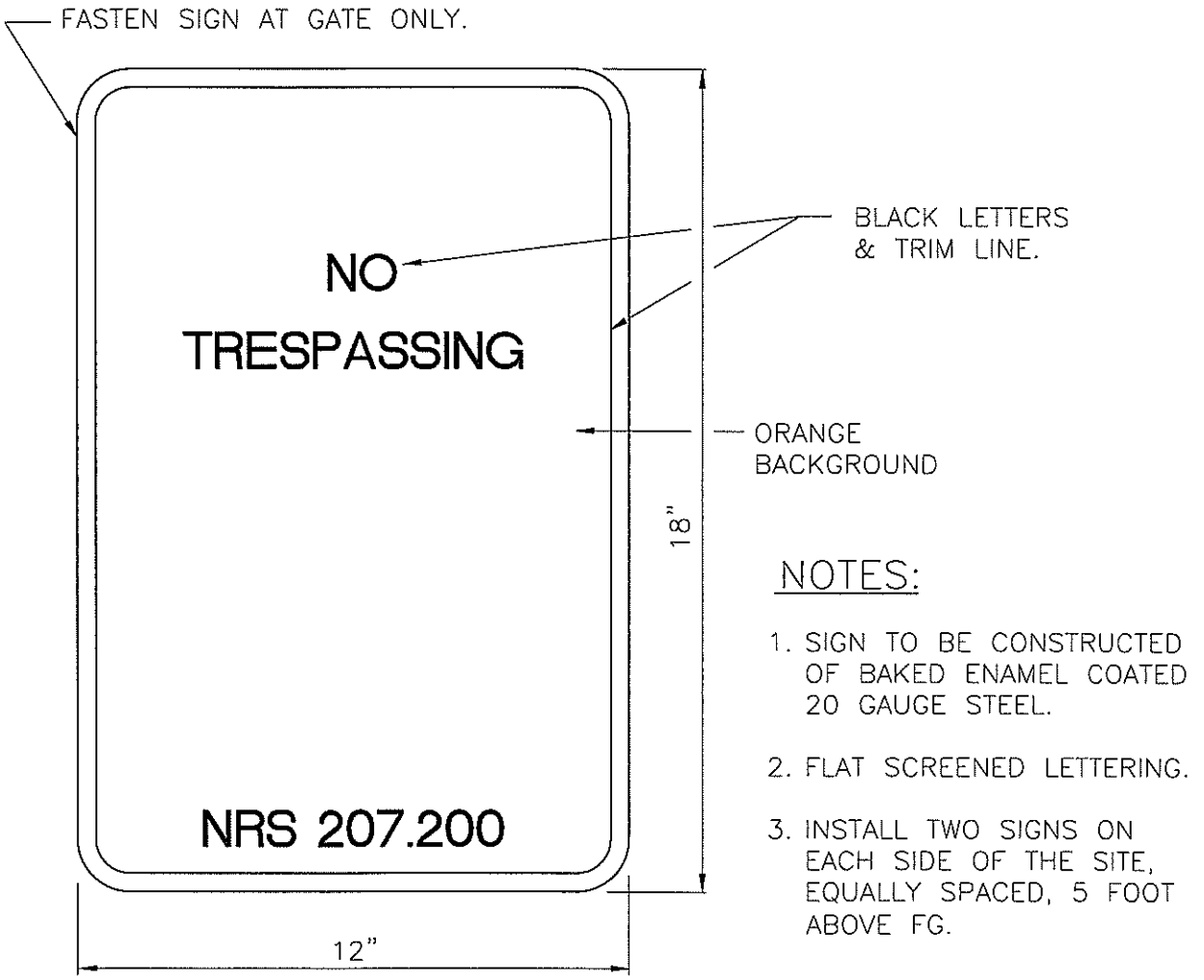

NOTES:

1. SIGN TO BE CONSTRUCTED OF BAKED ENAMEL COATED 20 GAUGE STEEL.
2. FLAT SCREENED LETTERING.
3. INSTALL TWO SIGNS ON EACH SIDE OF THE SITE, EQUALLY SPACED, 5 FOOT ABOVE FG.

NO TRESPASSING SIGN

NOT TO SCALE RC04-1 120406

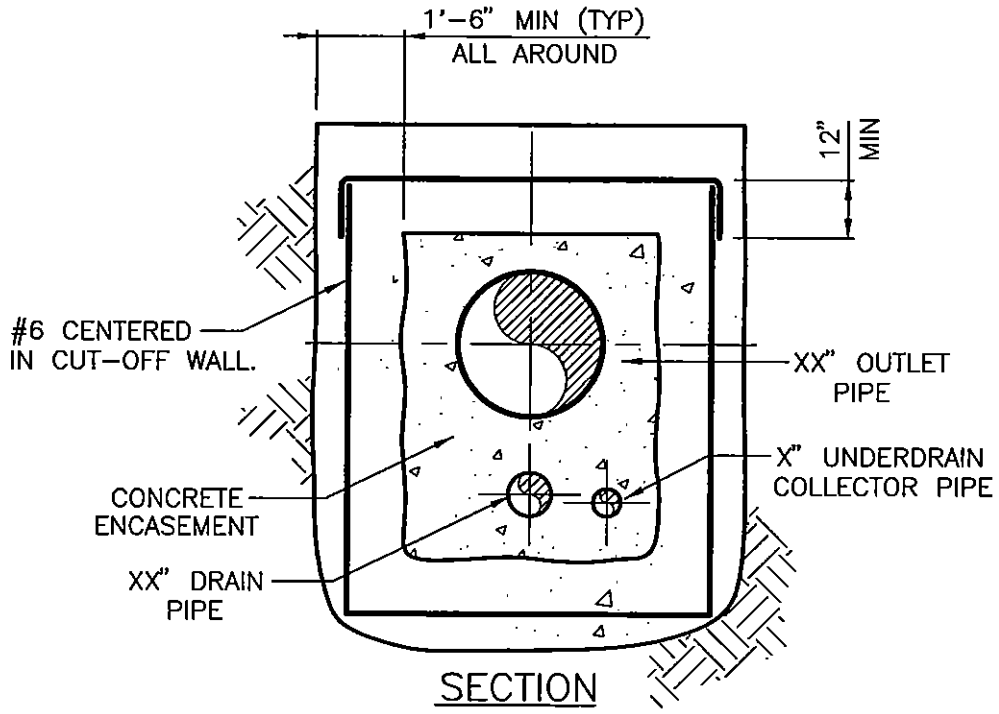

SECTION

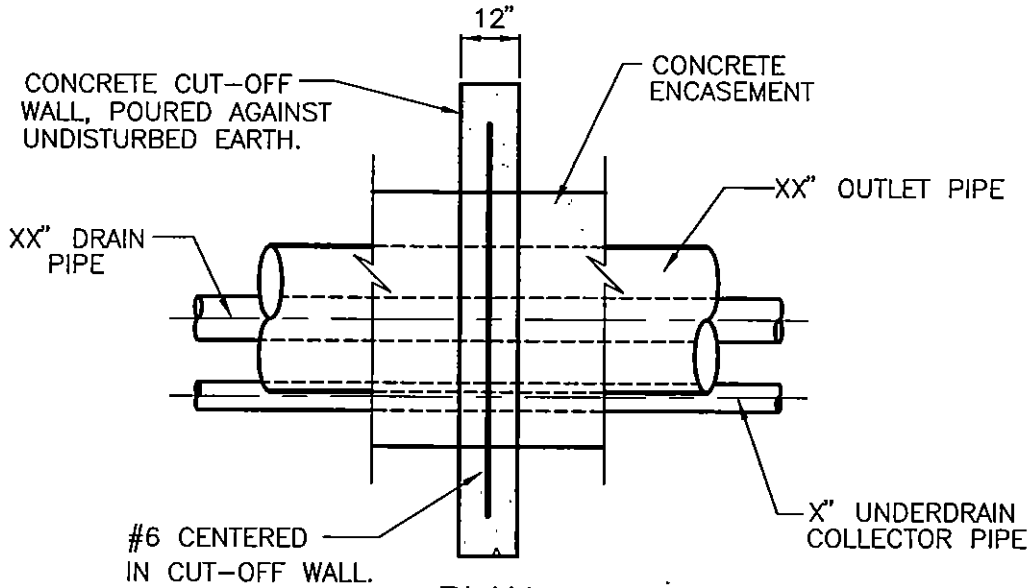

PLAN

CONCRETE CUT-OFF WALL

NOT TO SCALE RC05-1 070803

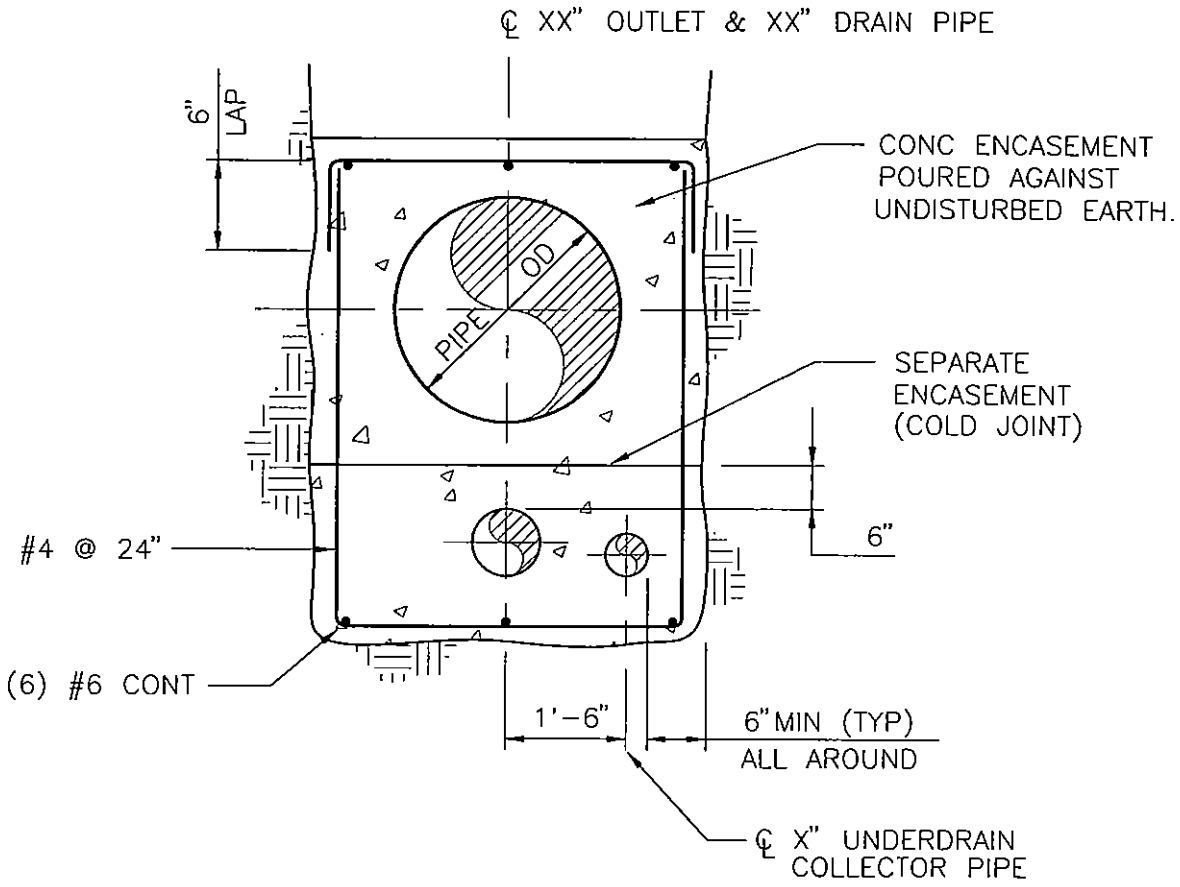

MULTIPLE PIPE ENCASEMENT

NOT TO SCALE

RC06-1 070803

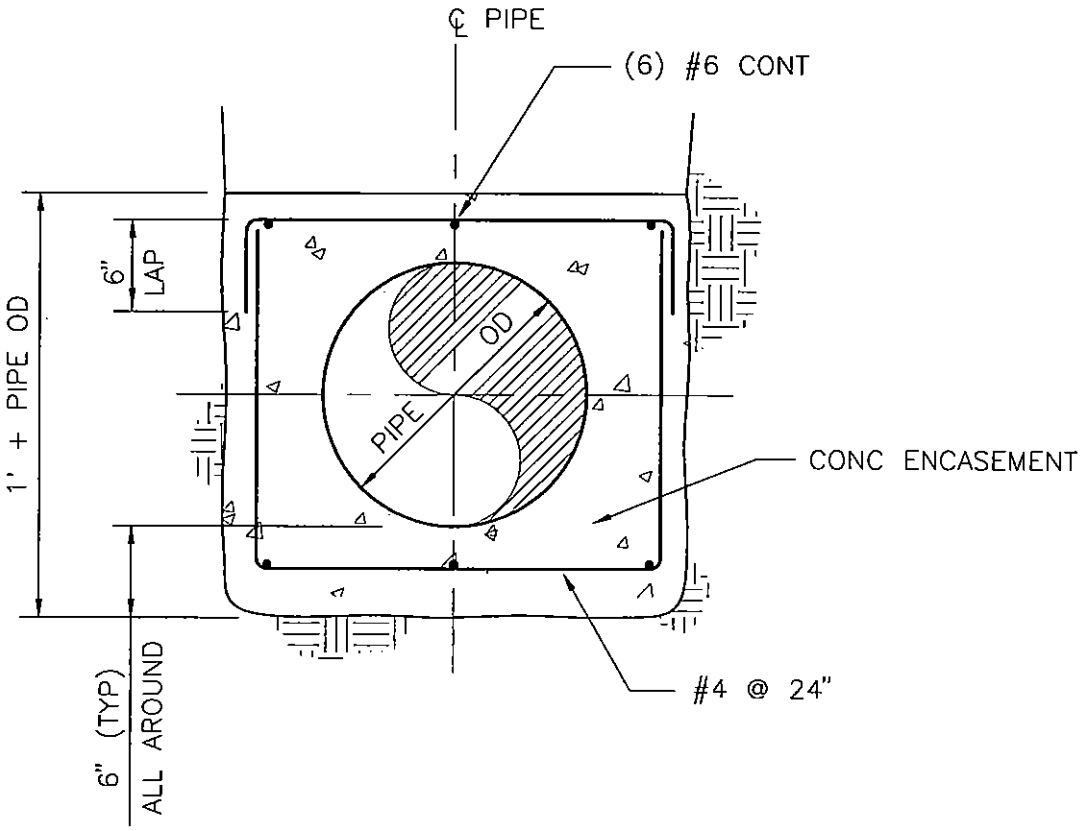

SINGLE PIPE ENCASEMENT

NOT TO SCALE

RC06-2 070803

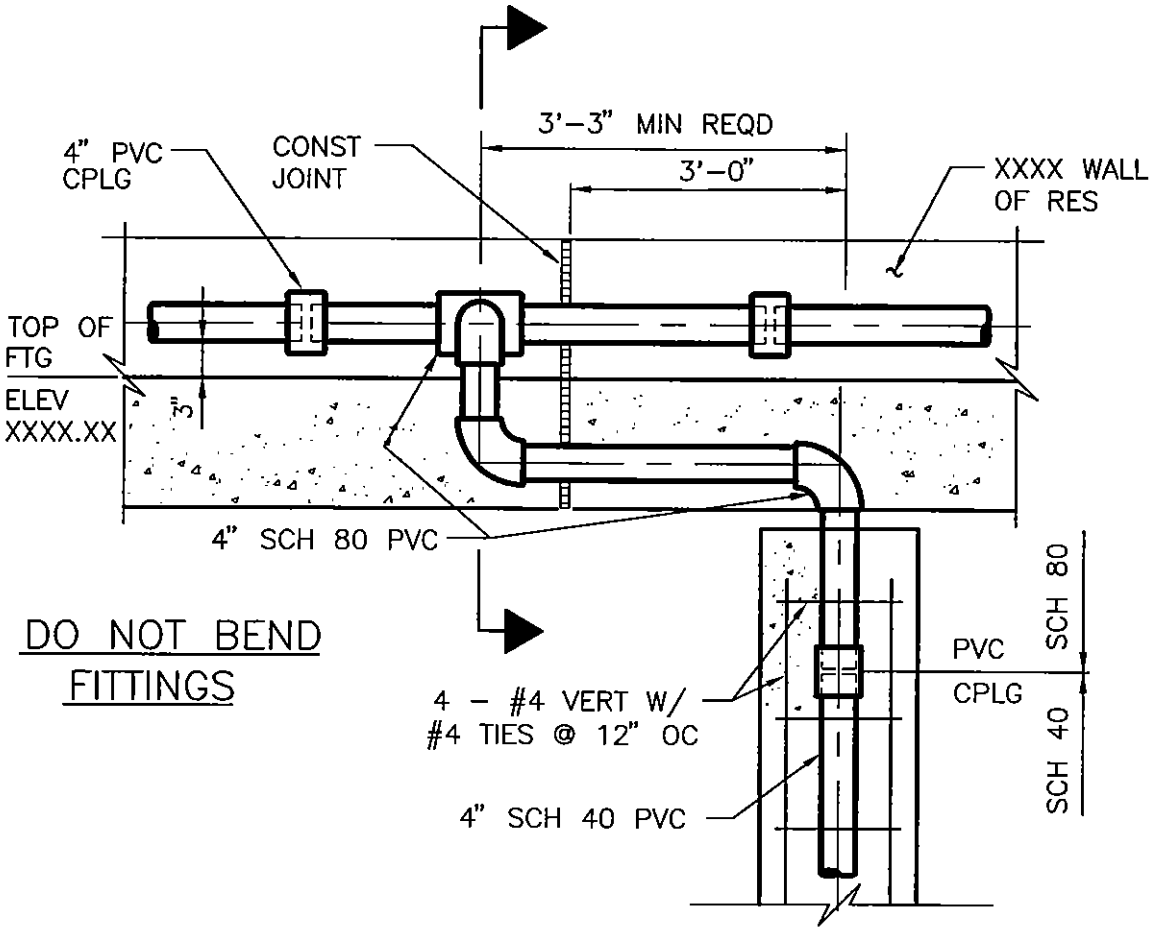

BASIN NO. X SHOWN
BASIN NO. X OPPOSITE HAND

WALL UNDERDRAIN OUTLET - ELEVATION

NOT TO SCALE

RC07-1 070803

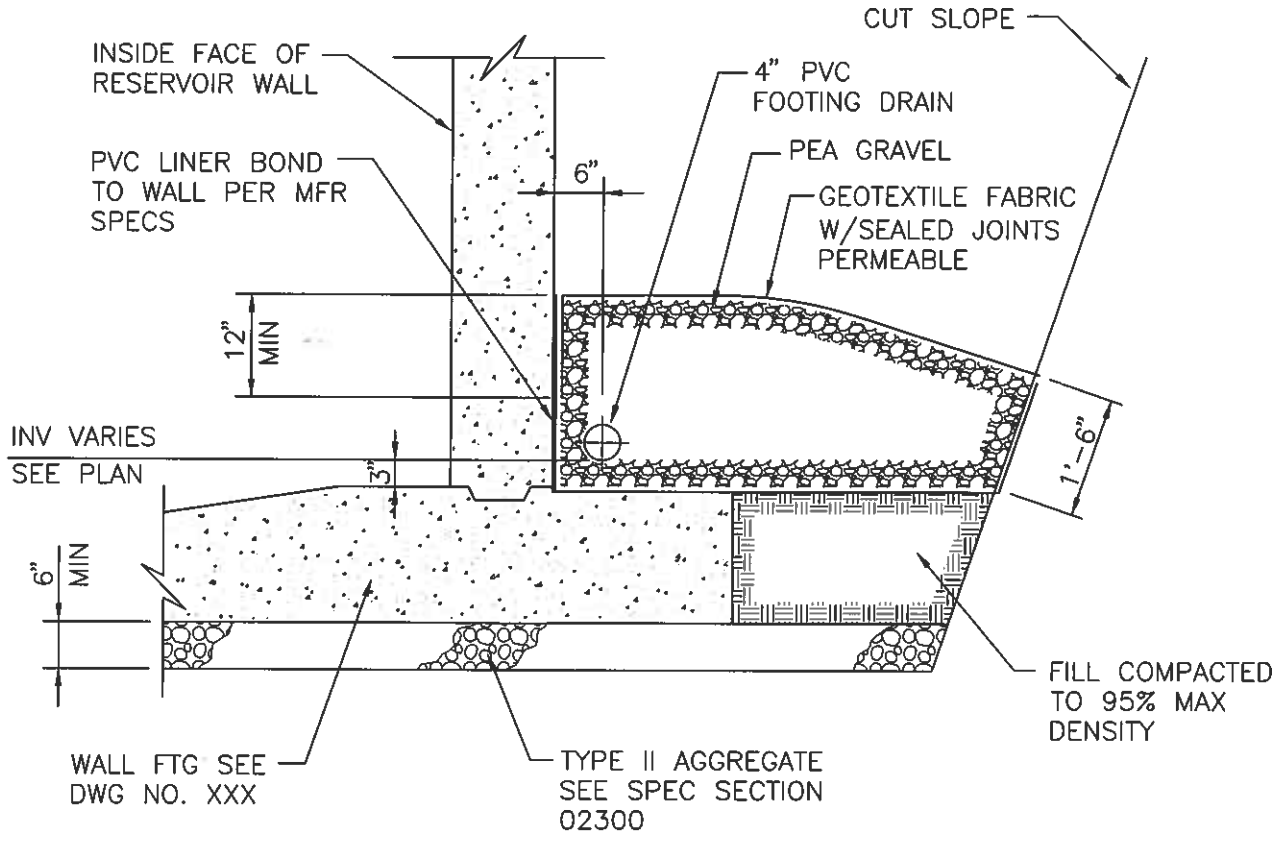

WALL UNDERDRAIN

NOT TO SCALE RC08-1 090109

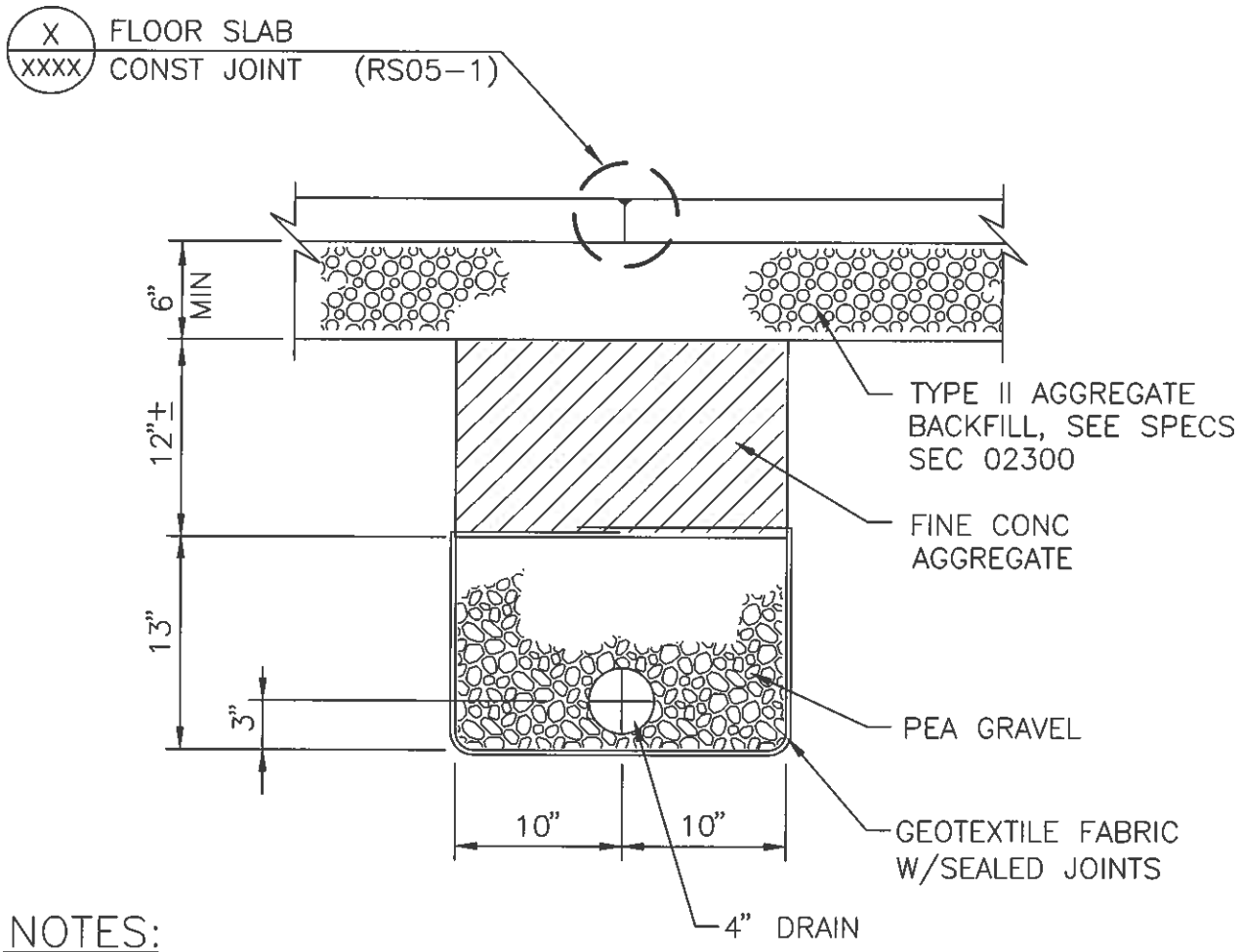

NOTES:

1. UNLESS OTHERWISE SHOWN, ALL UNDERDRAIN PIPING SHALL BE 4" PERFORATED PVC WITH BELL AND SPIGOT JOINTS. PLACE PERFORATIONS DOWN.
2. CAP DEAD ENDS.
3. MATCH CROWNS WHERE PIPE SIZE CHANGES.

FLOOR UNDERDRAIN

NOT TO SCALE RC09-1 090109

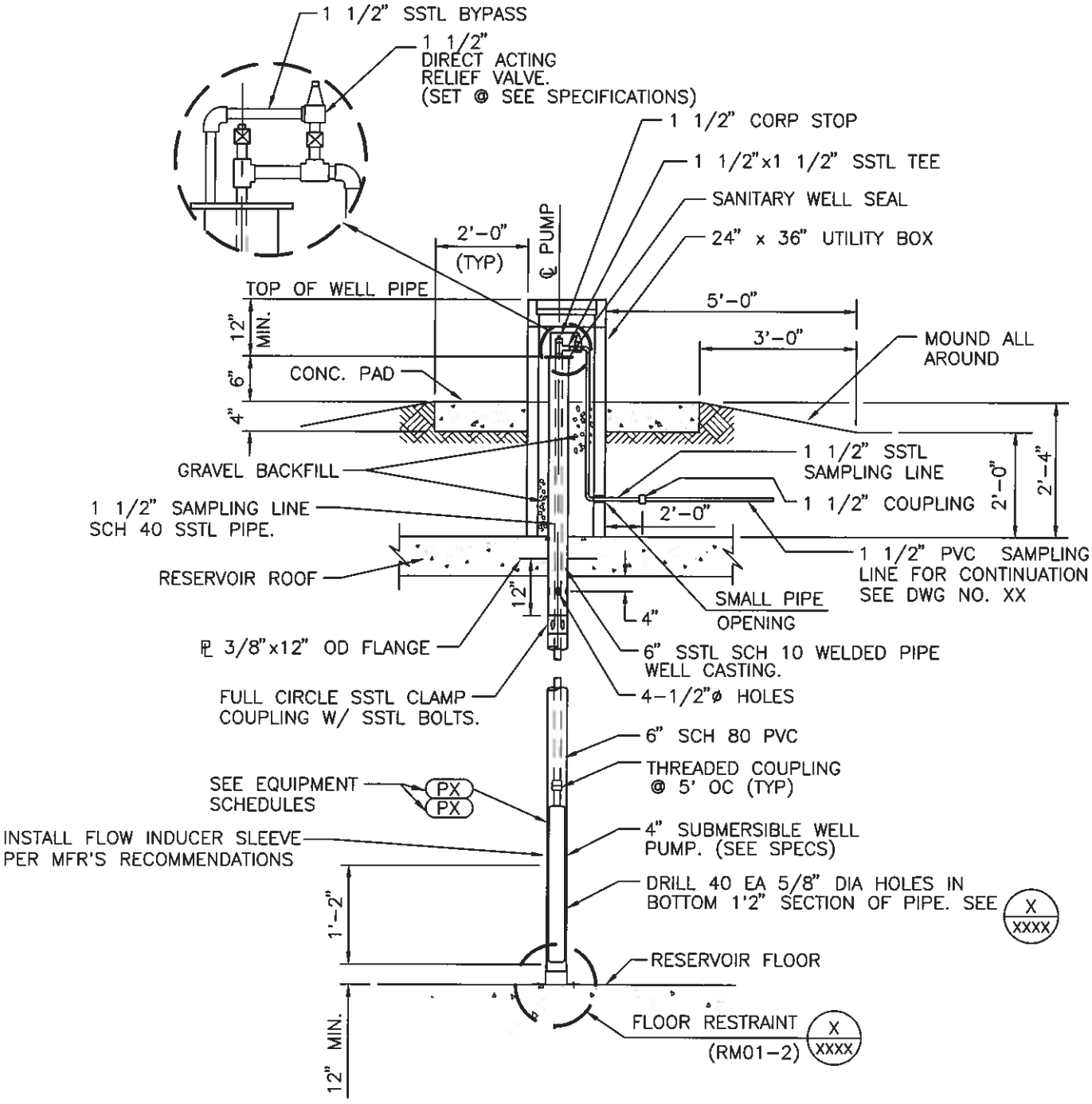

SAMPLE PUMP

NOT TO SCALE

RM01-1 083109

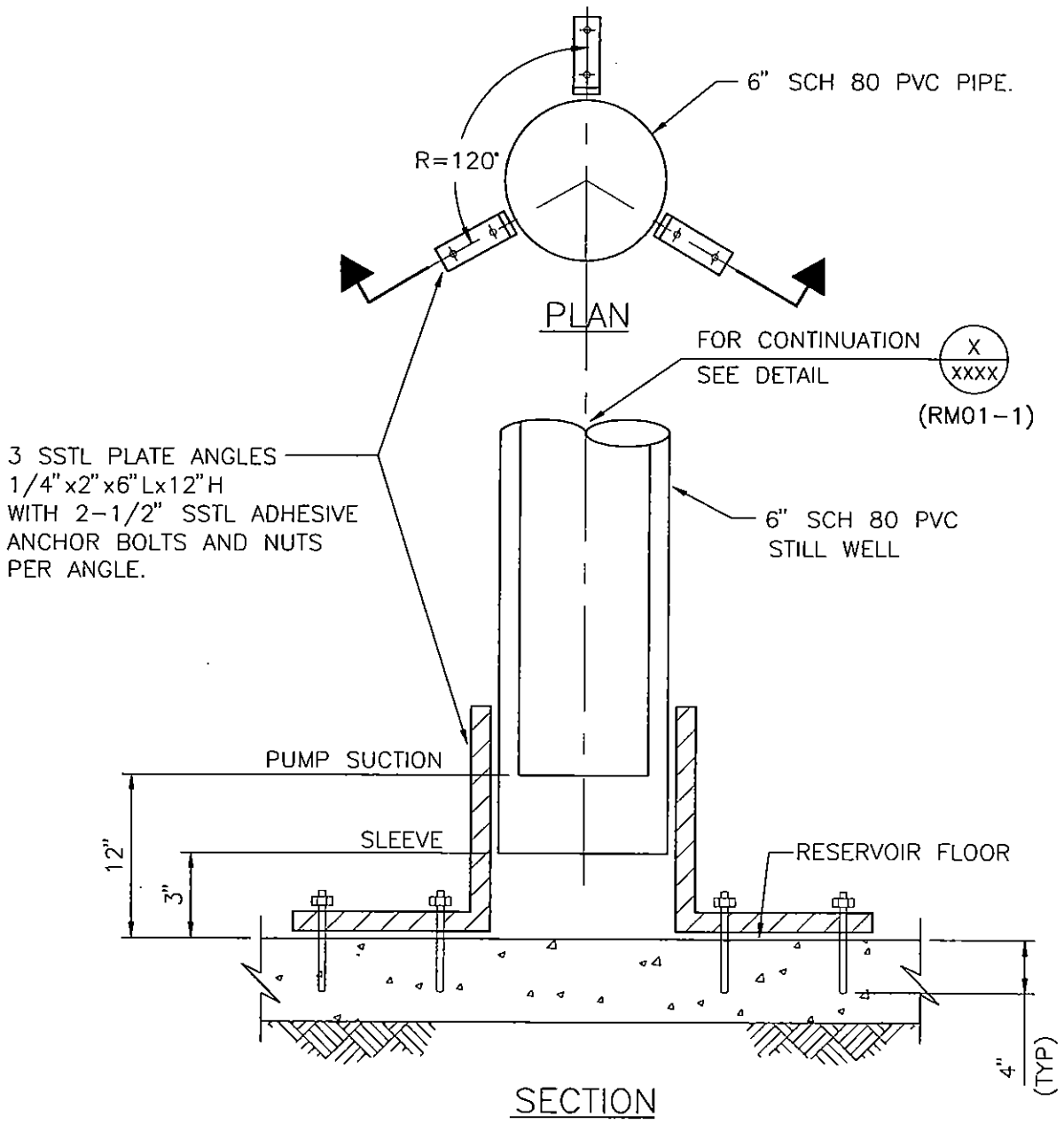

FLOOR RESTRAINT

NOT TO SCALE

RM01-2 070803

NOTE:

7.5 lb. 8"x8"x2" MAGNESIUM ANODE (TYP X PER PIPE OUTLET EQUALLY SPACED AROUND PIPE)

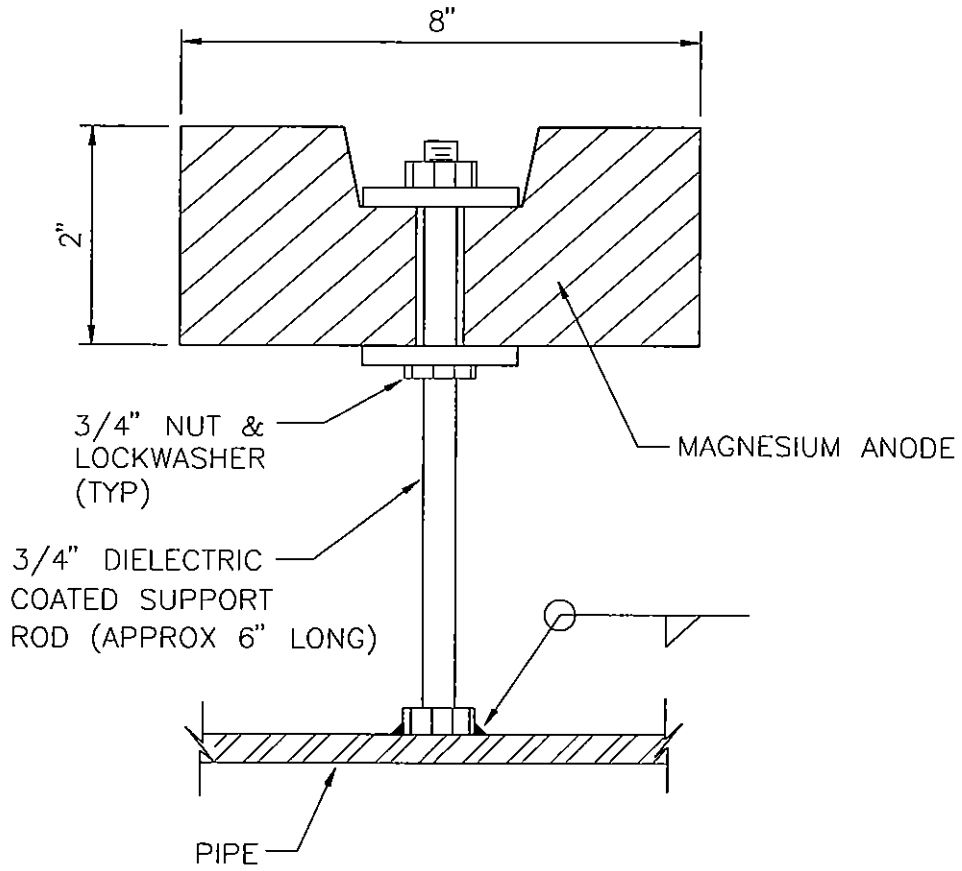

ANODE

NOT TO SCALE

RM02-1 070803

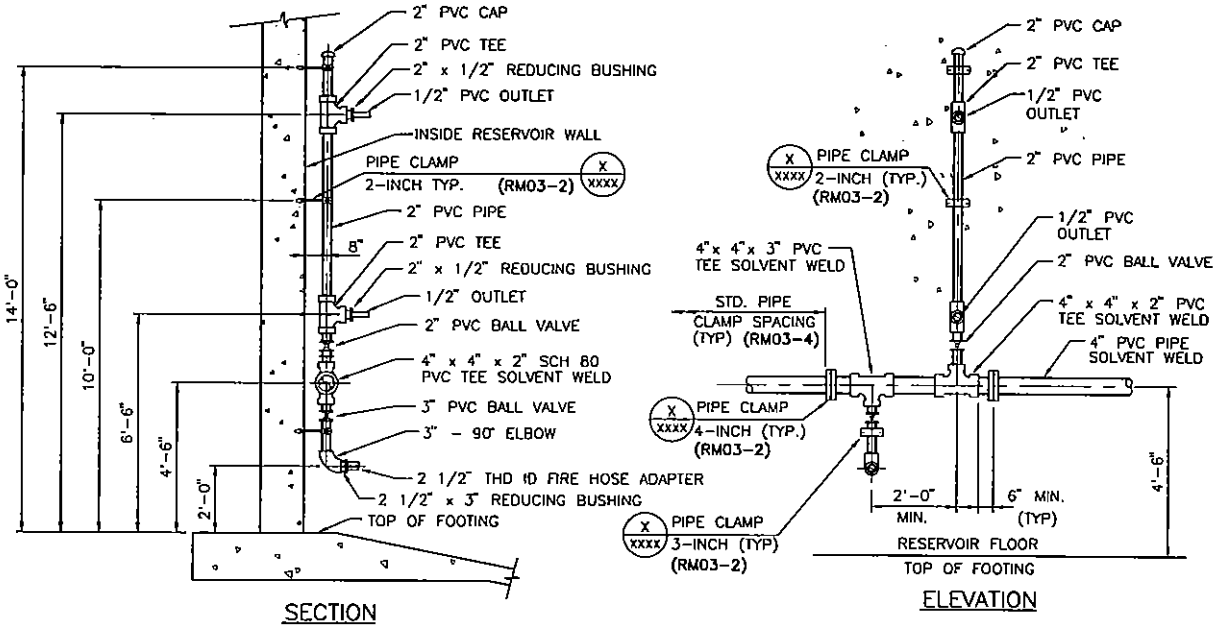

NOTE:
ALL PVC PIPE AND FITTINGS USED FOR WASH-DOWN RISER SHALL BE SCHEDULE 80.

WASHDOWN RISER

NOT TO SCALE

RM03-1 070803

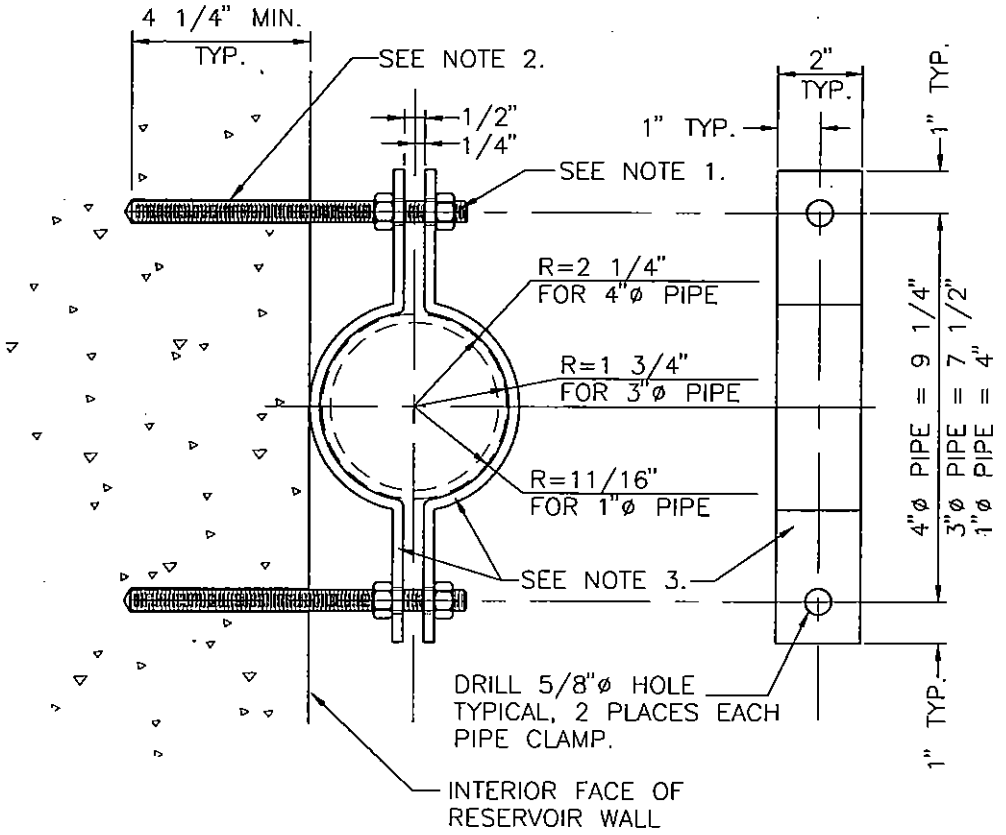

NOTES:

1. A TYPICAL PIPE CLAMP INSTALLATION SHALL CONSIST OF 2 EACH 1/2"−13UNC x 8" LONG 316 STAINLESS STEEL ALLTHREAD ANCHOR RODS WITH 2 EACH NUTS PER ROD. THE NUTS SHALL CONFORM TO ASTM A563, GRADE A AND SHALL BE CHAMFERED ON BOTH ENDS.

2. EACH ANCHOR ROD SHALL BE SET INTO A 9/16" DIA. HOLE DRILLED INTO THE REINFORCED RESERVOIR WALL. EACH DRILLED HOLE SHALL BE CLEANED AS PER THE ANCHOR MANUFACTURER'S RECOMENDATIONS. THE RODS SHALL BE SET IN EPOXY. THE RODS AND EPOXY SHALL BE AS MANUFACTURED BY HILTI OR AN APPROVED EQUAL.

3. ALL CLAMPS SHALL BE MADE OF 316 STAINLESS STEEL.

PIPE CLAMP

NOT TO SCALE RM03−2 070803

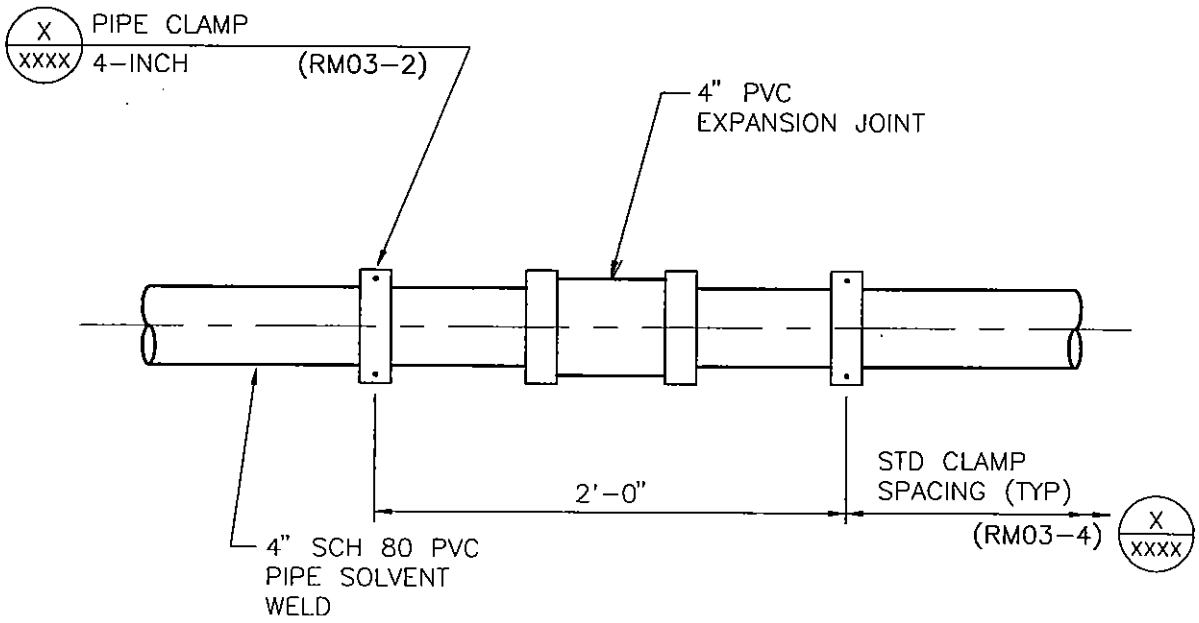

ELEVATION

EXPANSION JOINT

NOT TO SCALE

RM03-3 070803

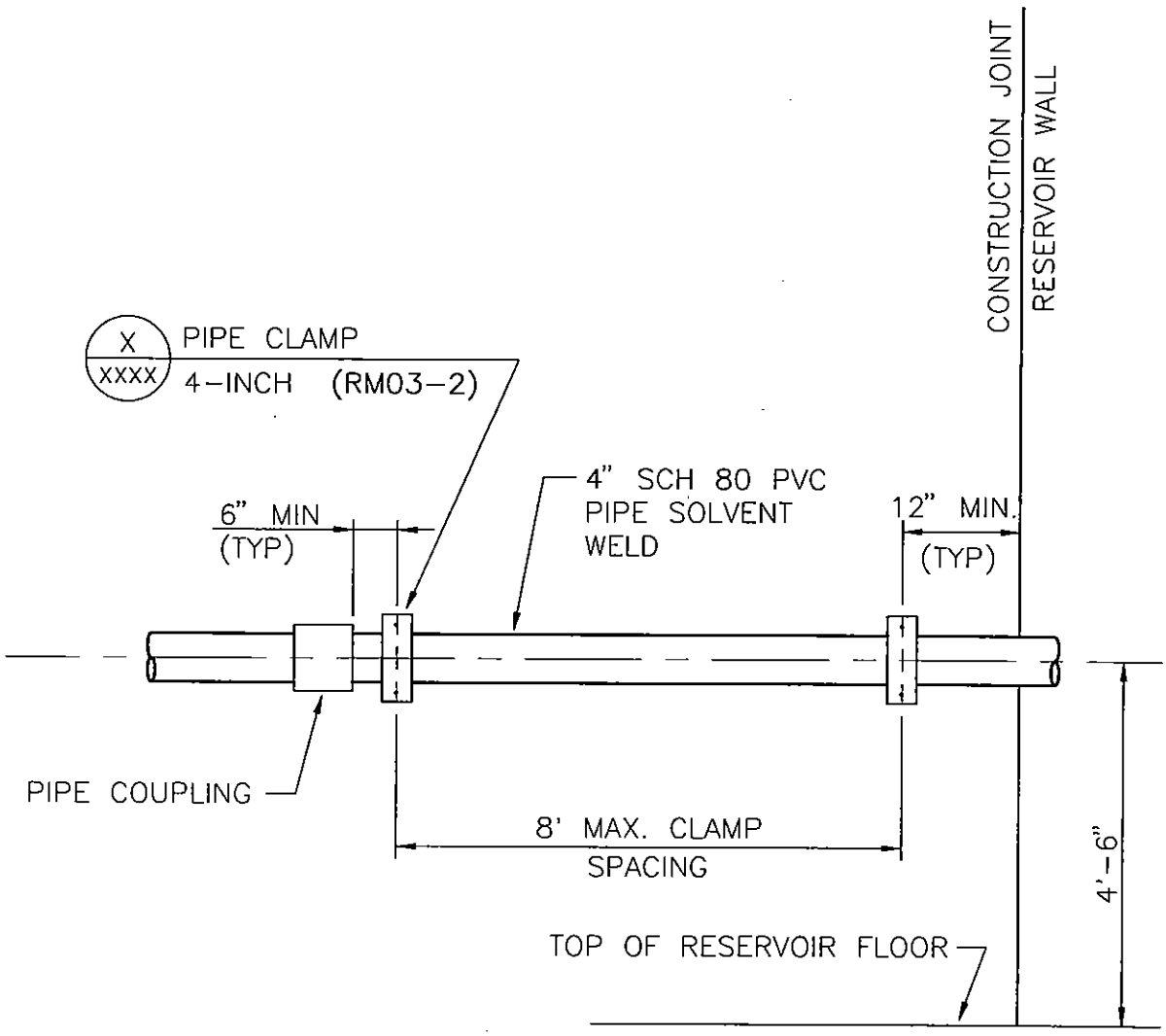

ELEVATION

STANDARD CLAMP SPACING

NOT TO SCALE

RM03-4 070803

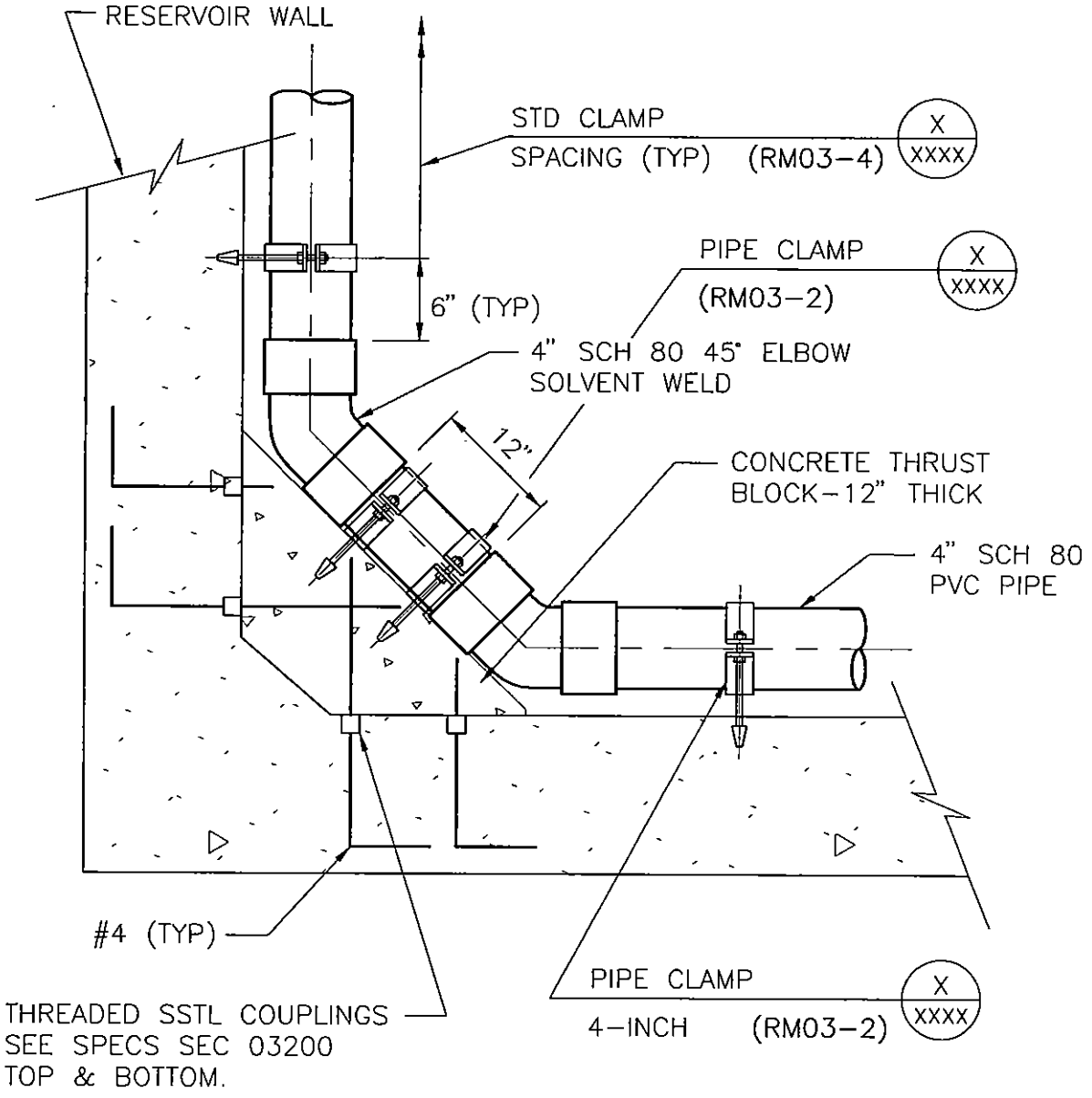

PLAN

TYPICAL CORNER

NOT TO SCALE

RM03-5 070803

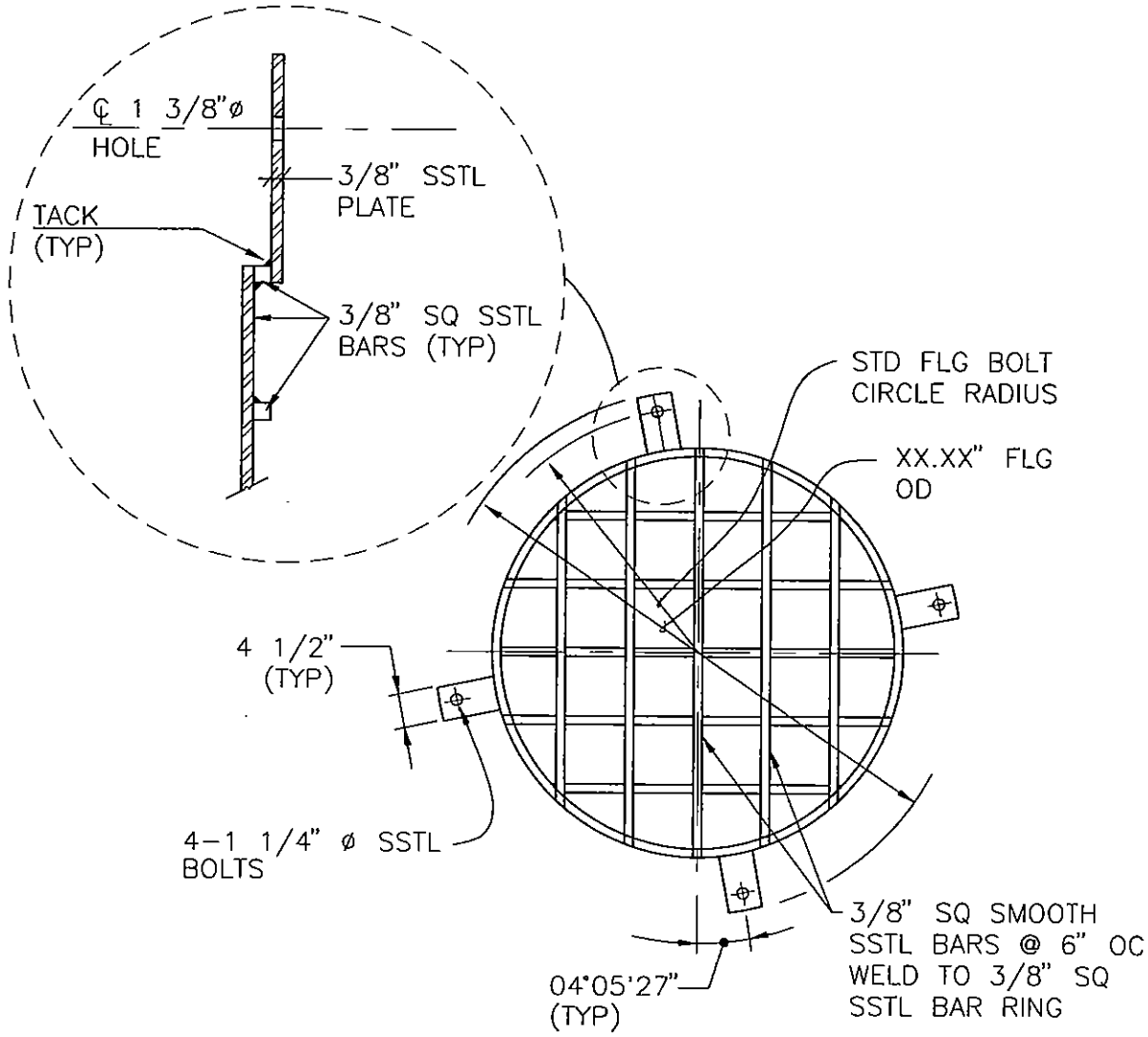

RING FLANGE

NOT TO SCALE

RM04-1 070803

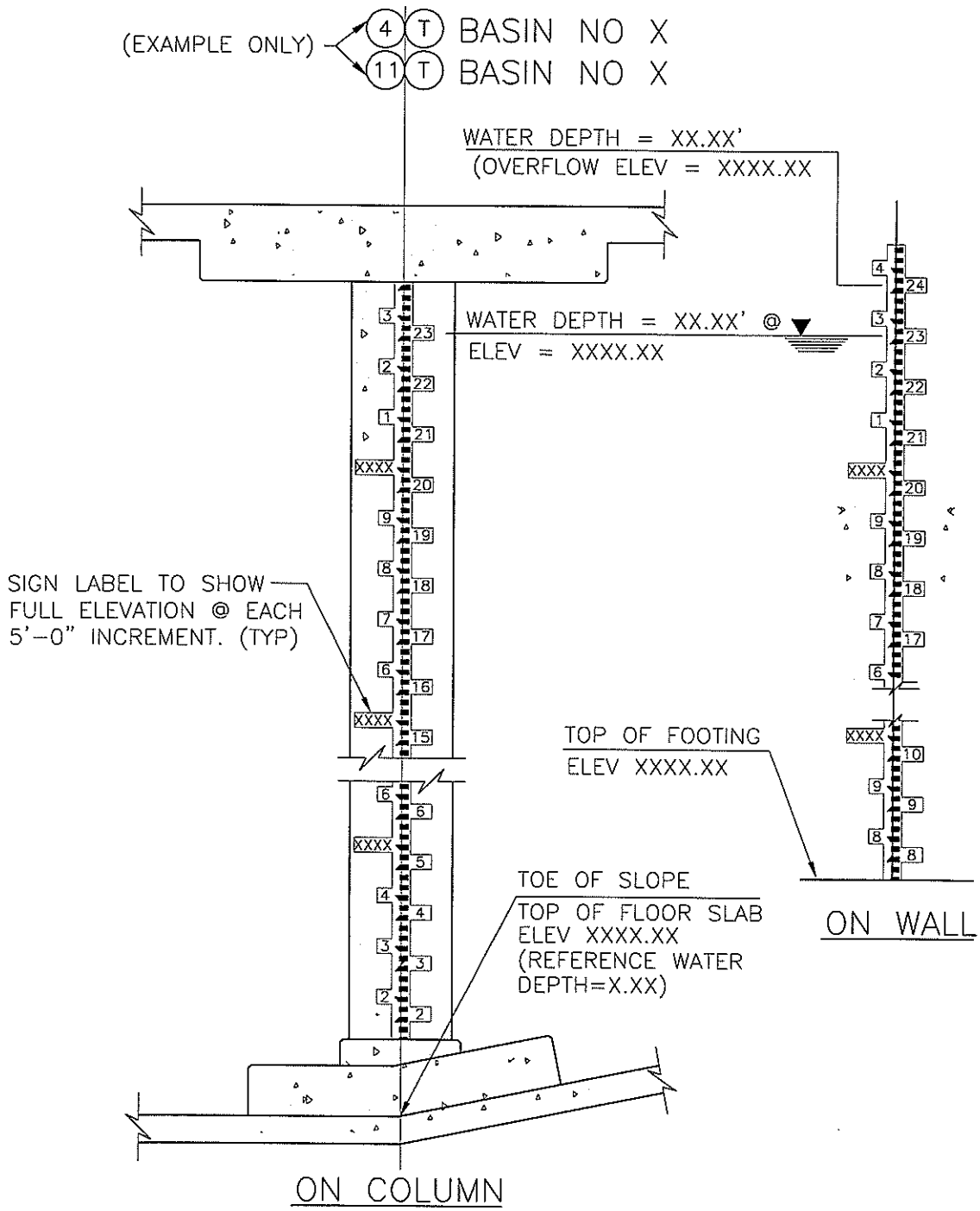

STAFF GAUGE

NOT TO SCALE

RM05-1 072006

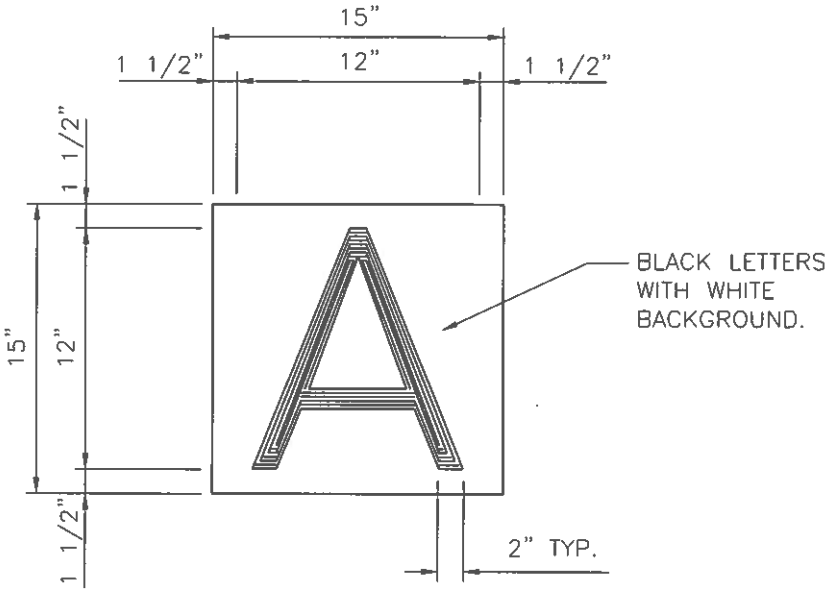

NOTES:

1. PAINT SHALL BE A NSF APPROVED COPOLYMER, SUITABLE FOR CONCRETE APPLICATION W/CONTINUOUS SUBMERSION.

2. CONCRETE COLUMNS & WALL PREPARATION SHALL BE IN ACCORDANCE WITH THE PAINT MANUFACTURER RECOMMENDATIONS.

3. EACH COLUMN REQUIRES ONE STENCILED ALPHA CHARACTER FACING XXXX. EACH COLUMN ALSO REQUIRES ONE OR TWO DIGIT STENCILED NUMERIC CHARACTERS. NUMERIC CHARACTERS SHALL FACE THE XXXXX FOR ALL COLUMNS OF COLUMN ROWS X–X. NUMERIC CHARACTERS SHALL FACE THE XXXXX FOR ALL COLUMNS OF COLUMN ROWS X–X.

4. THE INTERSECTION OF A COLUMN ROW, W/ANY RESERVOIR WALL, WILL REQUIRE COLUMN ROW IDENTIFICATION, ON RESERVOIR WALL.

5. PAINT COLUMN ROW CHARACTERS 5'–0" FROM THE BASE OF THE COLUMN, AND BASE OF WALL.

COLUMN ROW IDENTIFICATION

NOT TO SCALE

RM05–2 082808

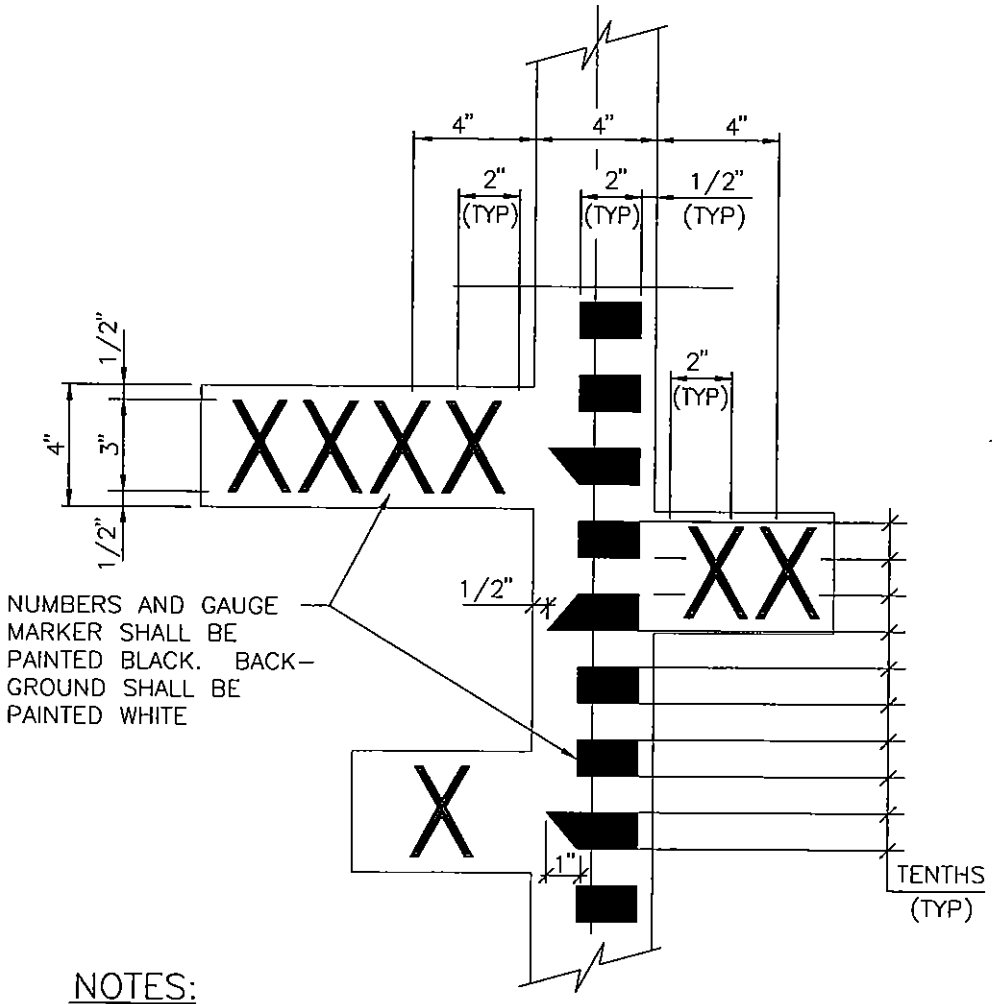

NOTES:

1. PAINT SHALL BE A NSF APPROVED COPOLYMER, SUITABLE FOR CONCRETE APPLICATION W/ CONTINUOUS SUBMERSION.
2. CONCRETE COLUMNS & WALL PREPARATION SHALL BE IN ACCORDANCE WITH THE PAINT MANUFACTURER RECOMMENDATIONS, OR SPECIFICATION SECTION 09965, WHICH EVER IS MORE STRINGENT.
3. LOCATE FACING RESERVOIR ACCESS HATCH. (TYPICAL 2 PLACES)

NUMBER AND GAUGE MARKER

NOT TO SCALE

RM05-3 070803

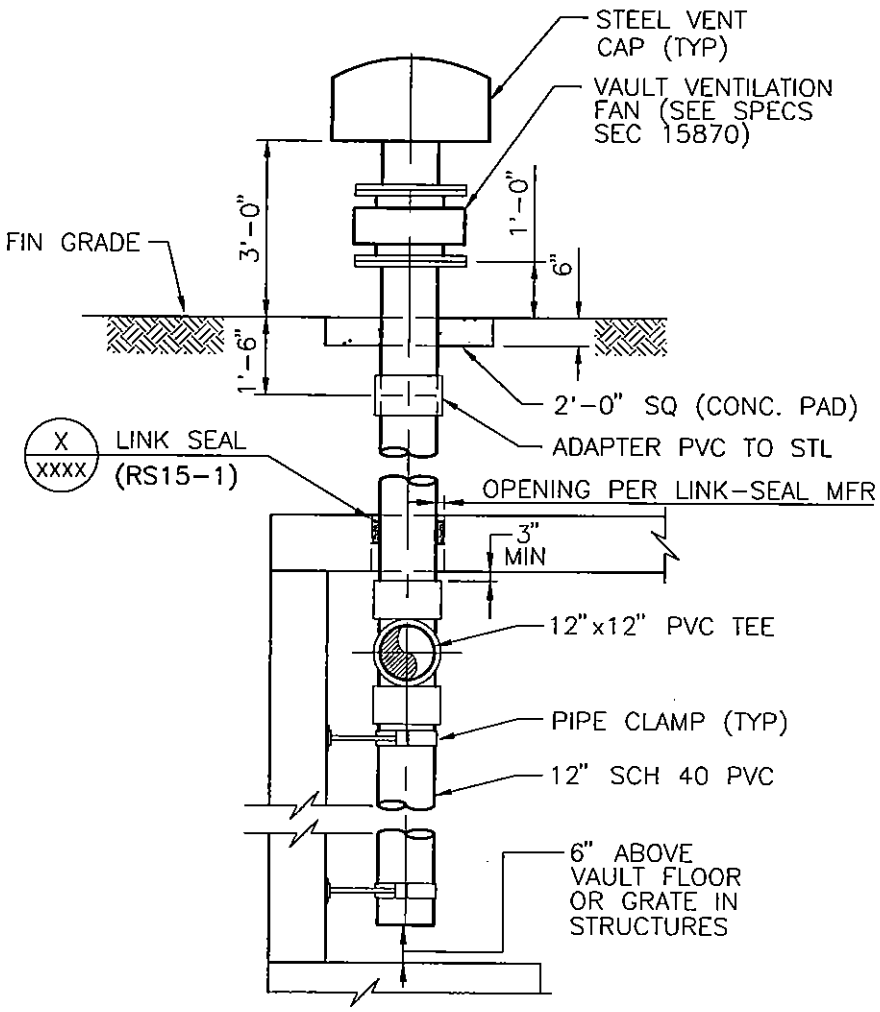

NOTES:

1. THE FOLLOWING VAULTS SHALL HAVE A VAULT VENTILATION FAN:
   a. OUTLET VAULT NO X & NO X (SHEET NO M-XX)
   b. UNDER DRAIN STRUCTURE NO X & NO X (SHEET NO M-XX)
   c. CHECK VALVE VAULT (SHEET NO M-XX)
2. SEE ELEC DWGS FOR ELECTRICAL AND CONTROL.

VALVE VAULT VENTILATION PIPING

NOT TO SCALE

RM06-1 070803

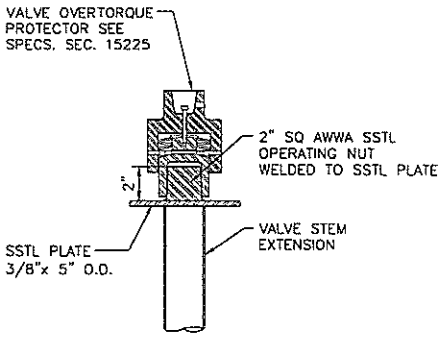

VALVE OVERTORQUE PROTECTOR (2)

NOT TO SCALE

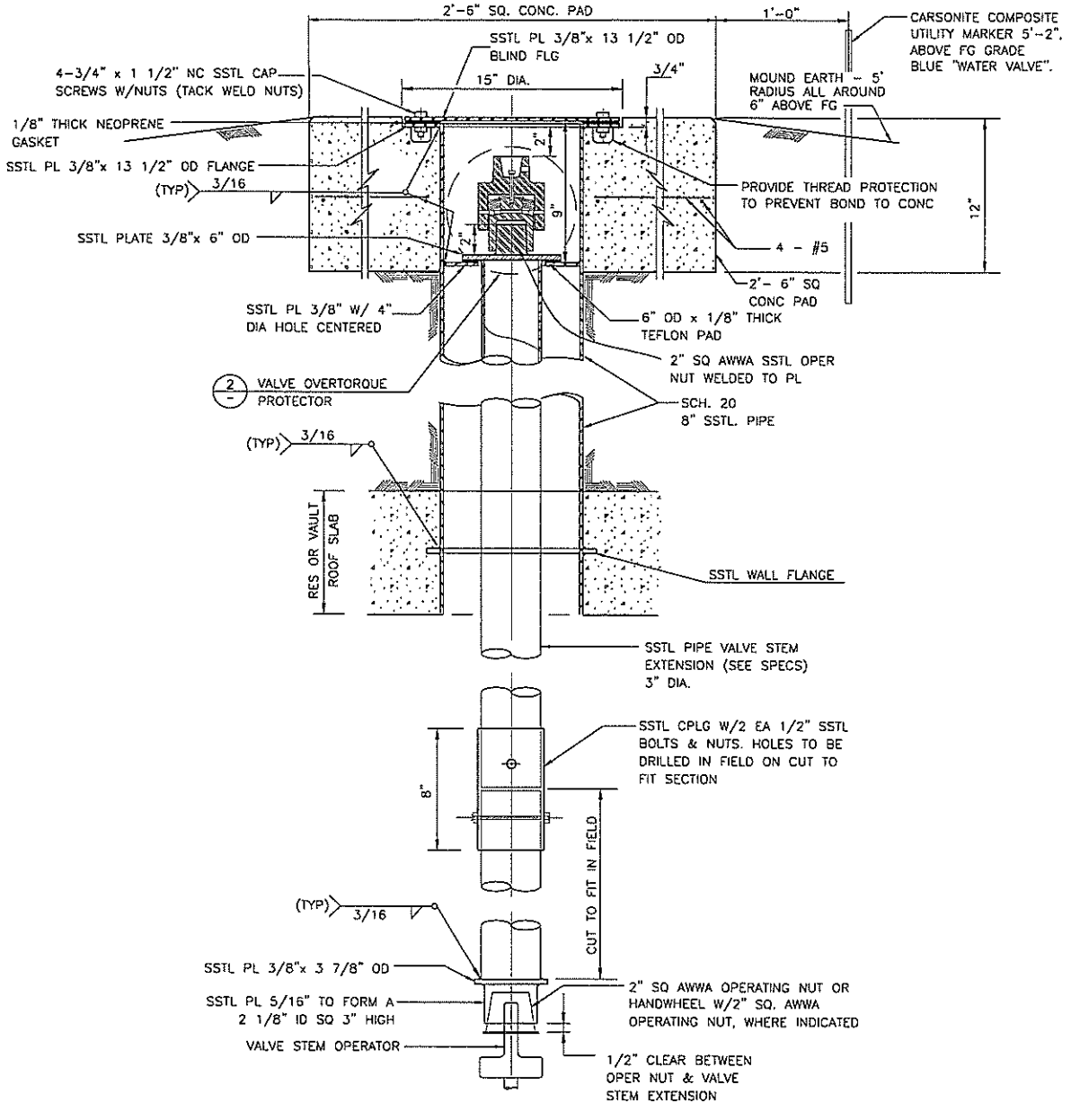

SECTIONAL VIEW

RESERVOIR - VALVE STEM EXTENSION DETAIL (1)

NOT TO SCALE RM07-1 080306

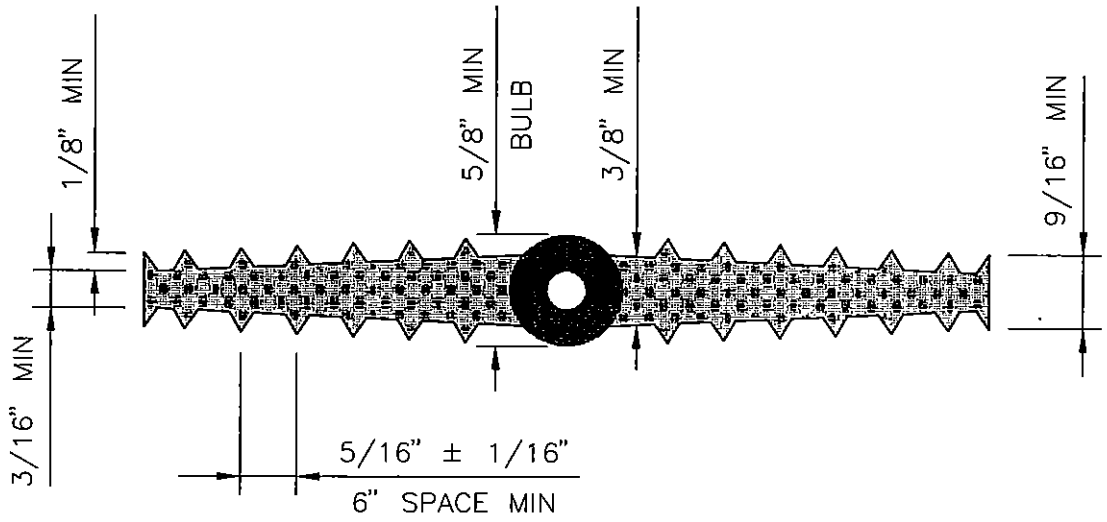

6-INCH CENTERBULB WATERSTOP

NOT TO SCALE

RS01-1 070803

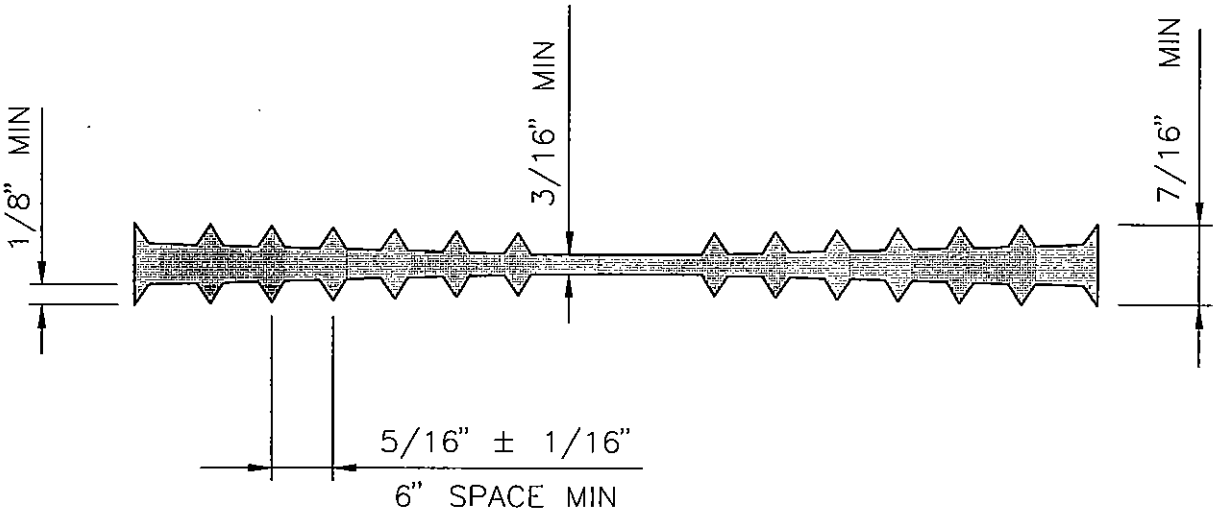

6-INCH FLAT STRIP WATERSTOP

NOT TO SCALE

RS02-1 070803

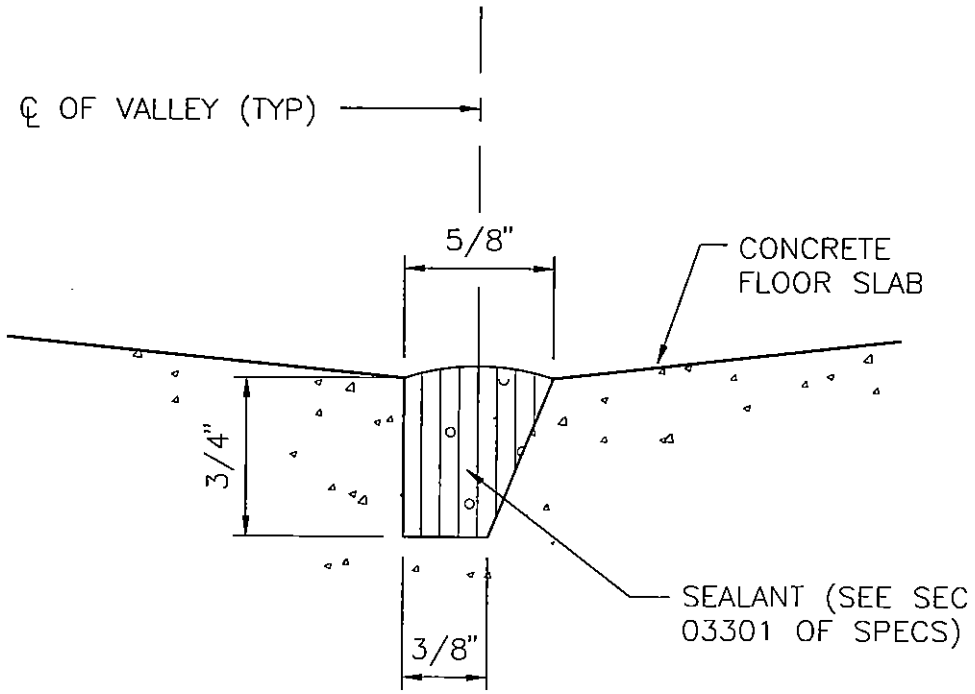

CONTROLLED CRACK AT VALLEYS

NOT TO SCALE

RS03-1 070803

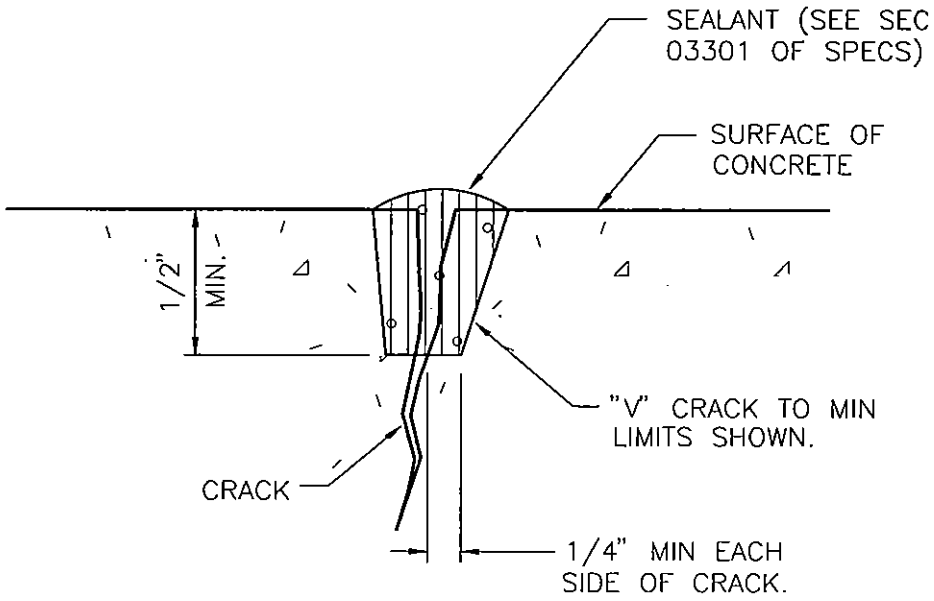

NOTE:

ALL CRACKS IN FLOOR SLABS, WALLS & ROOF SLABS SHALL BE REPAIRED PER DETAIL OR AS INSTRUCTED BY THE DISTRICT ENGINEER PRIOR TO FILLING THE RESERVOIR WITH WATER.

CRACK REPAIR

NOT TO SCALE

RS04-1 070803

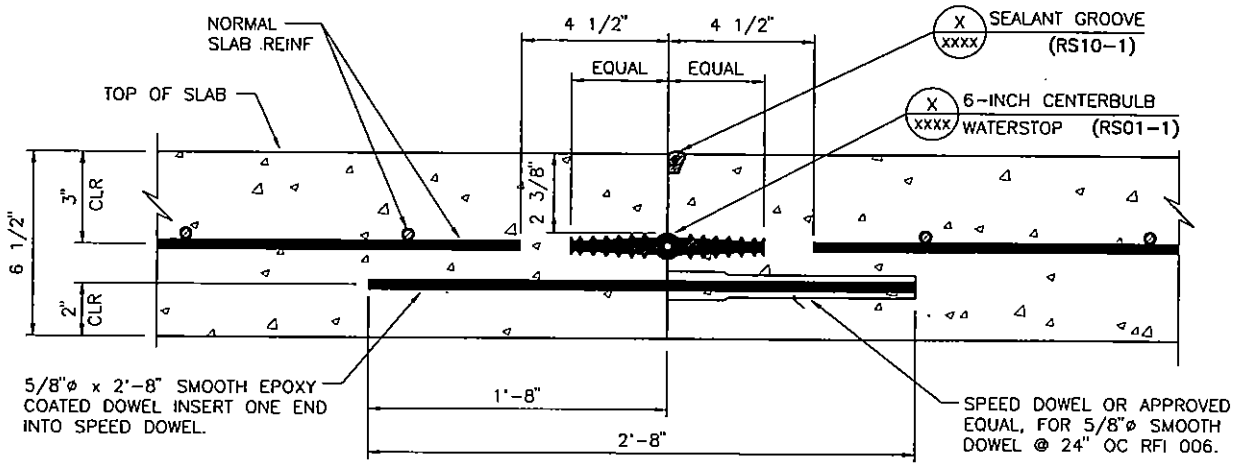

TYPICAL EXCEPT FIRST JOINT FROM WALL

FLOOR SLAB CONSTRUCTION JOINT

NOT TO SCALE RS05-1 031501

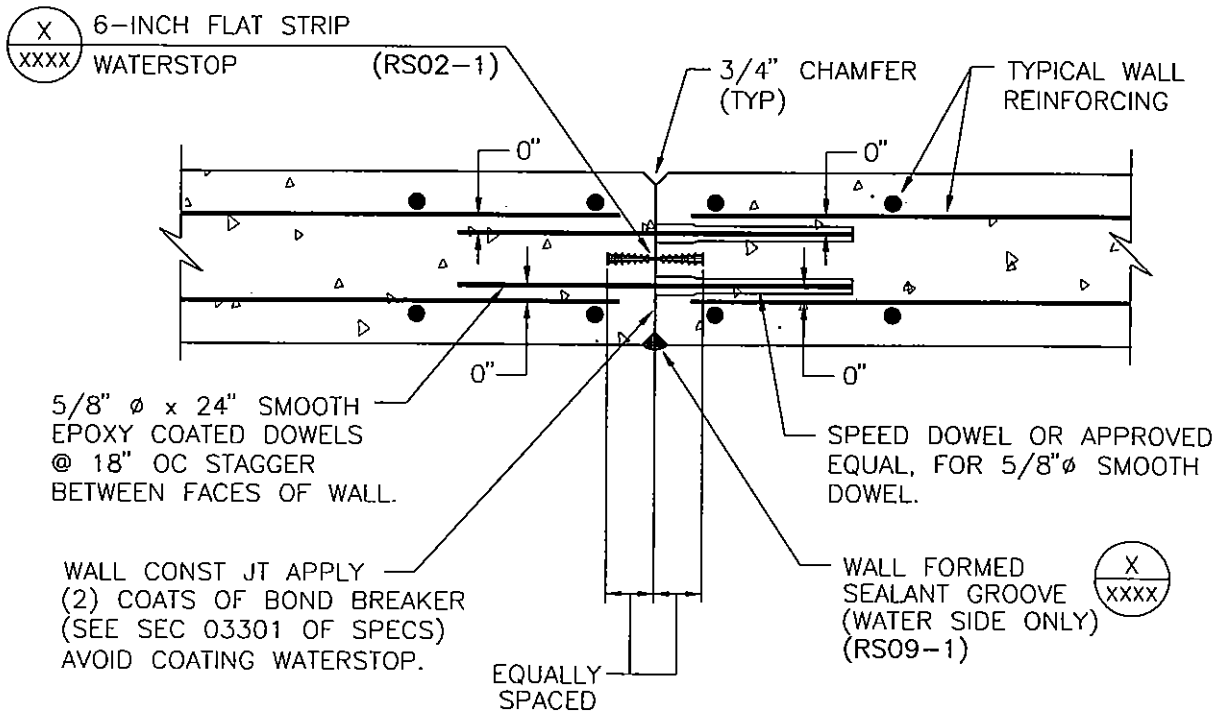

NOTE:

WALL SEALANT GROOVE CONTINUOUS FROM TOP OF FOOTING TO BOTTOM OF ROOF FILLET.

VERTICAL WALL CONSTRUCTION JOINT

NOT TO SCALE RS06-1 070803

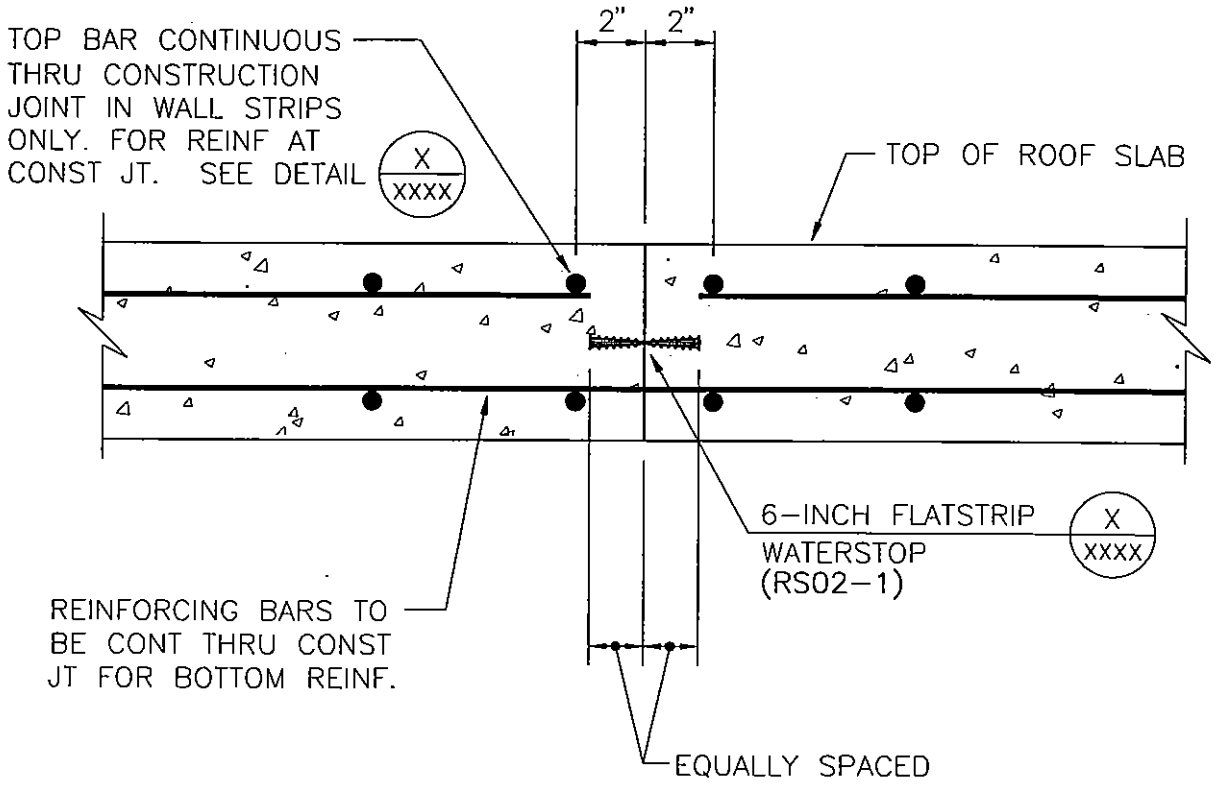

ROOF SLAB CONSTRUCTION JOINT

NOT TO SCALE

RS07-1 070803

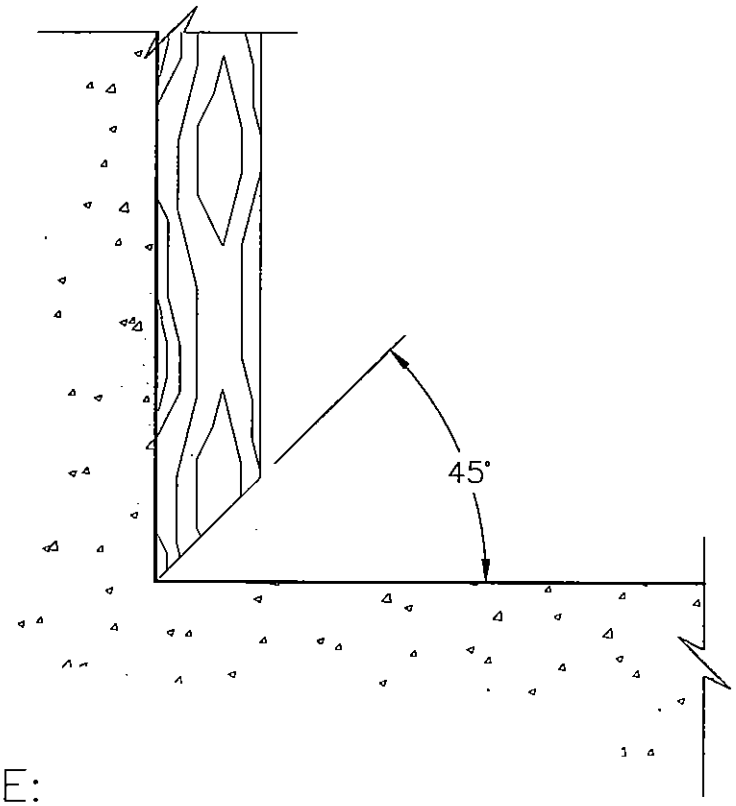

NOTE:

FORM TO BE BEVELED AS SHOWN AT ALL PLACES WHERE HORIZONTAL AND VERTICAL SURFACES INTERSECT WHEN BOTH ARE IN THE SAME POUR.

FORM BEVEL

NOT TO SCALE

RS08-1 070803

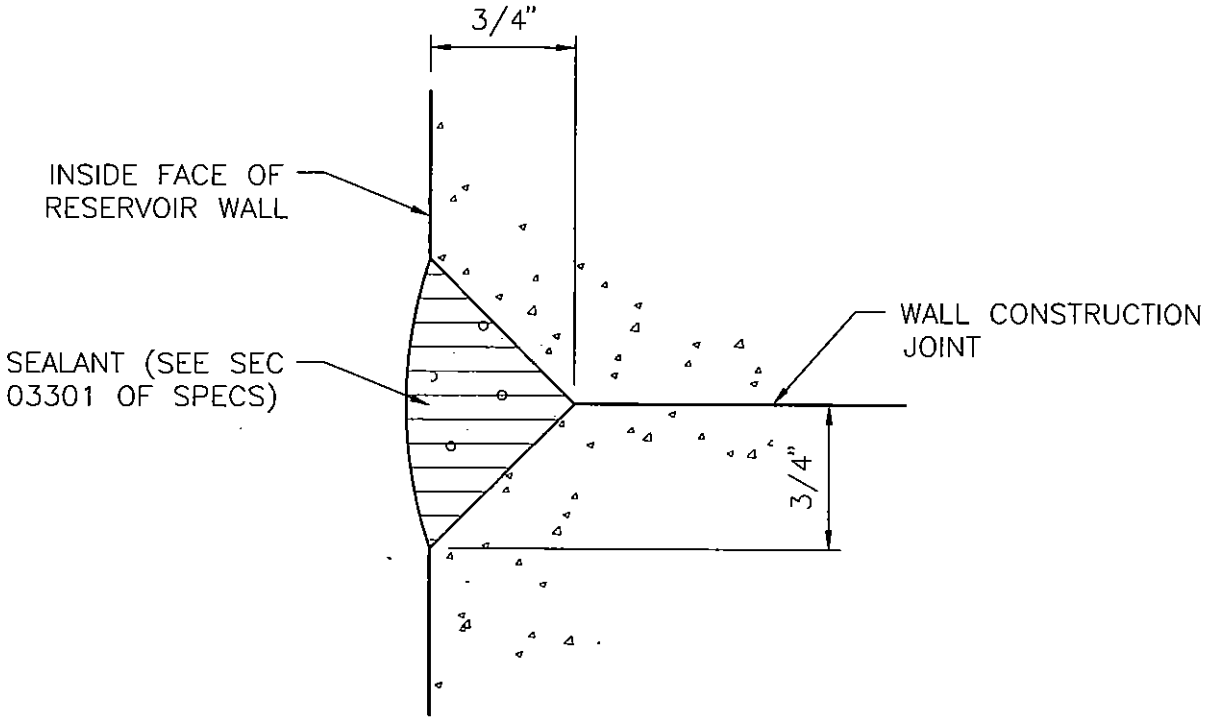

NOTE:

SEALANT GROOVE TO EXTEND FROM TOP OF WALL FOOTING TO BOTTOM OF 6" FILLET, INSIDE WALL CONSTRUCTION JOINTS ONLY.

WALL-FORMED SEALANT GROOVE

NOT TO SCALE

RS09-1 070803

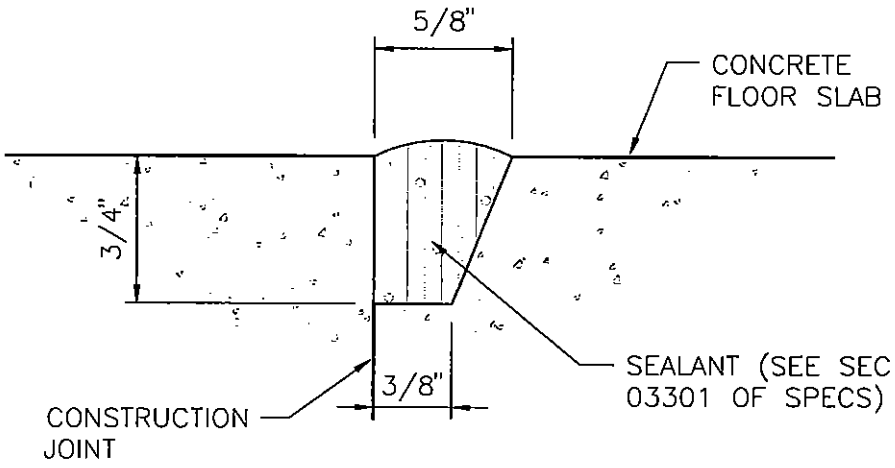

NOTE:

1. AT CONTRACTORS OPTION, SEALANT GROOVES MAY CONTINUE STRAIGHT ACROSS CONSTRUCTION JOINT INTERSECTION OR BE STAGGERED UPON APPROVAL BY THE ENGINEER.
2. NO BOND BREAKER WHERE SEALANT GROOVE IS CONSTRUCTED.

FLOOR SLAB-FORMED SEALANT GROOVE

NOT TO SCALE

RS10-1 070803

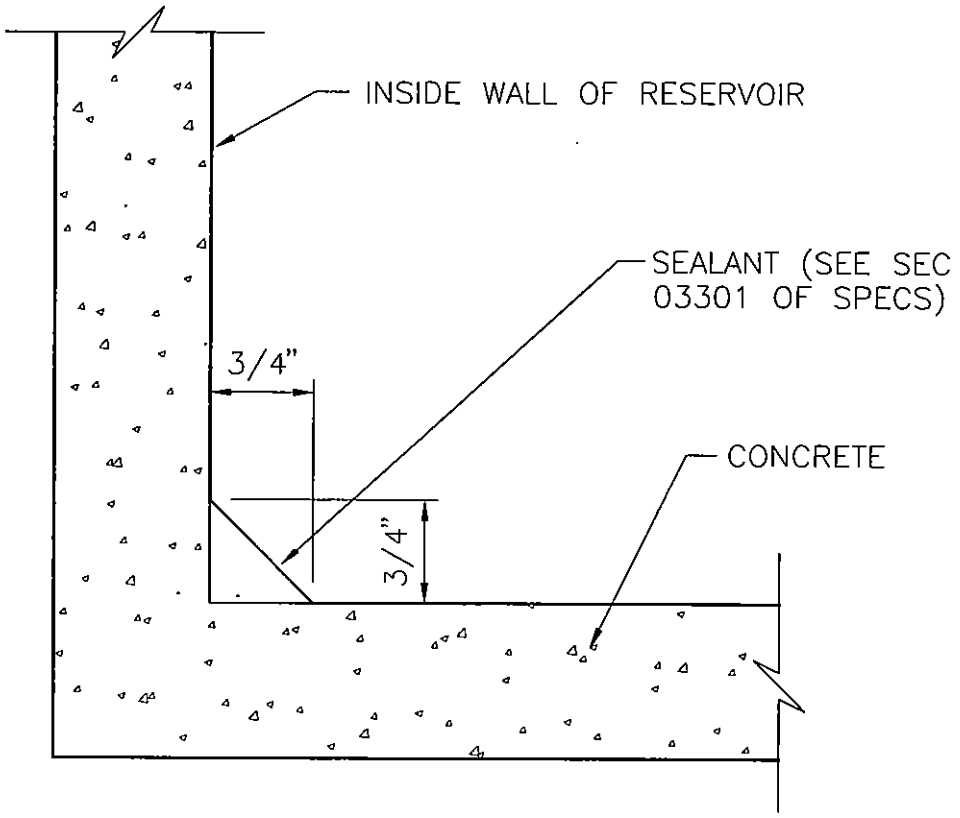

SEALANT FILLET

NOT TO SCALE

RS11-1 070803

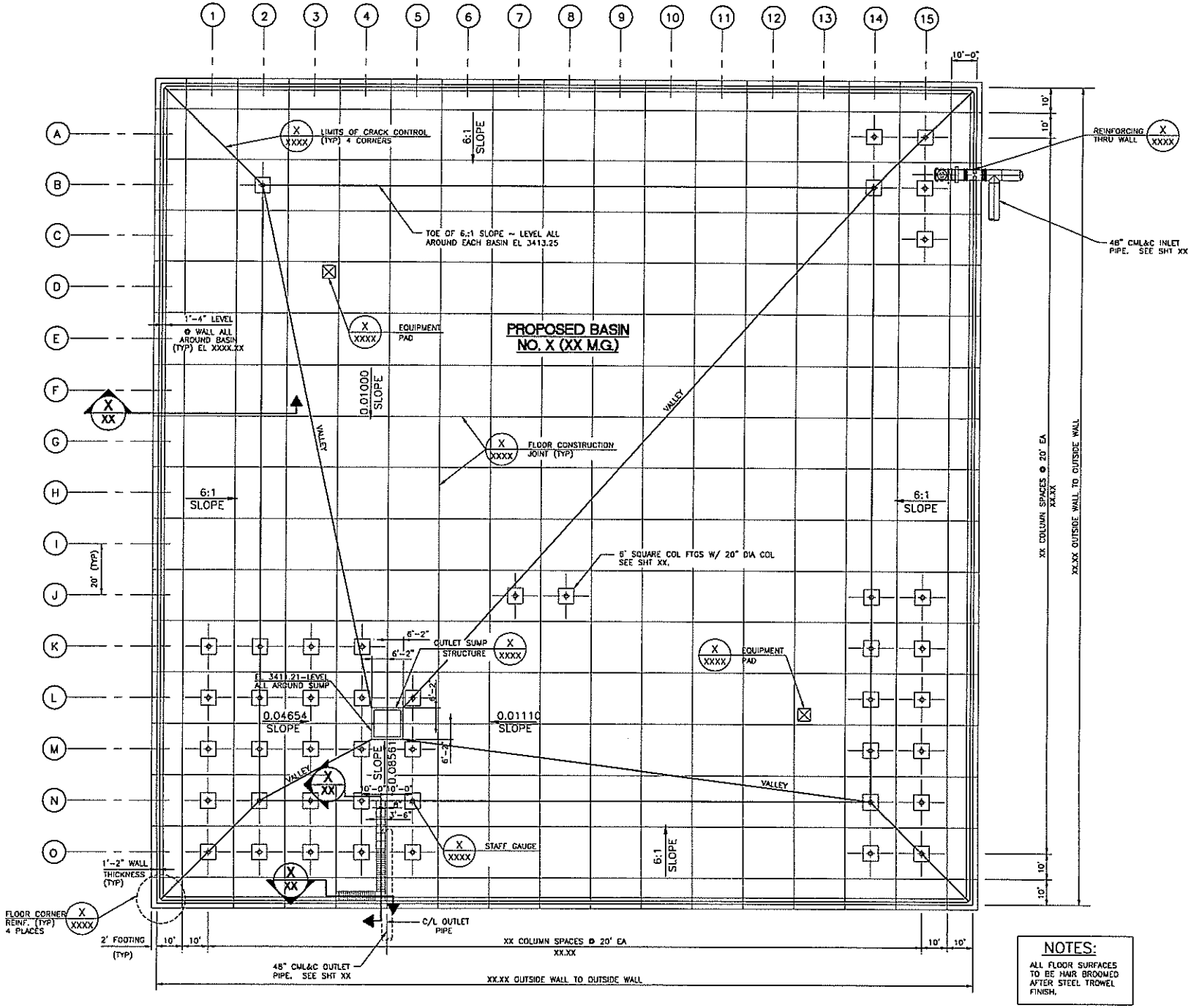

NOTES:

ALL FLOOR SURFACES TO BE HAIR BROOMED AFTER STEEL TROWEL FINISH.

RESERVOIR FLOOR PLAN

NOT TO SCALE RS12-1 071306

FOR EXAMPLE ONLY

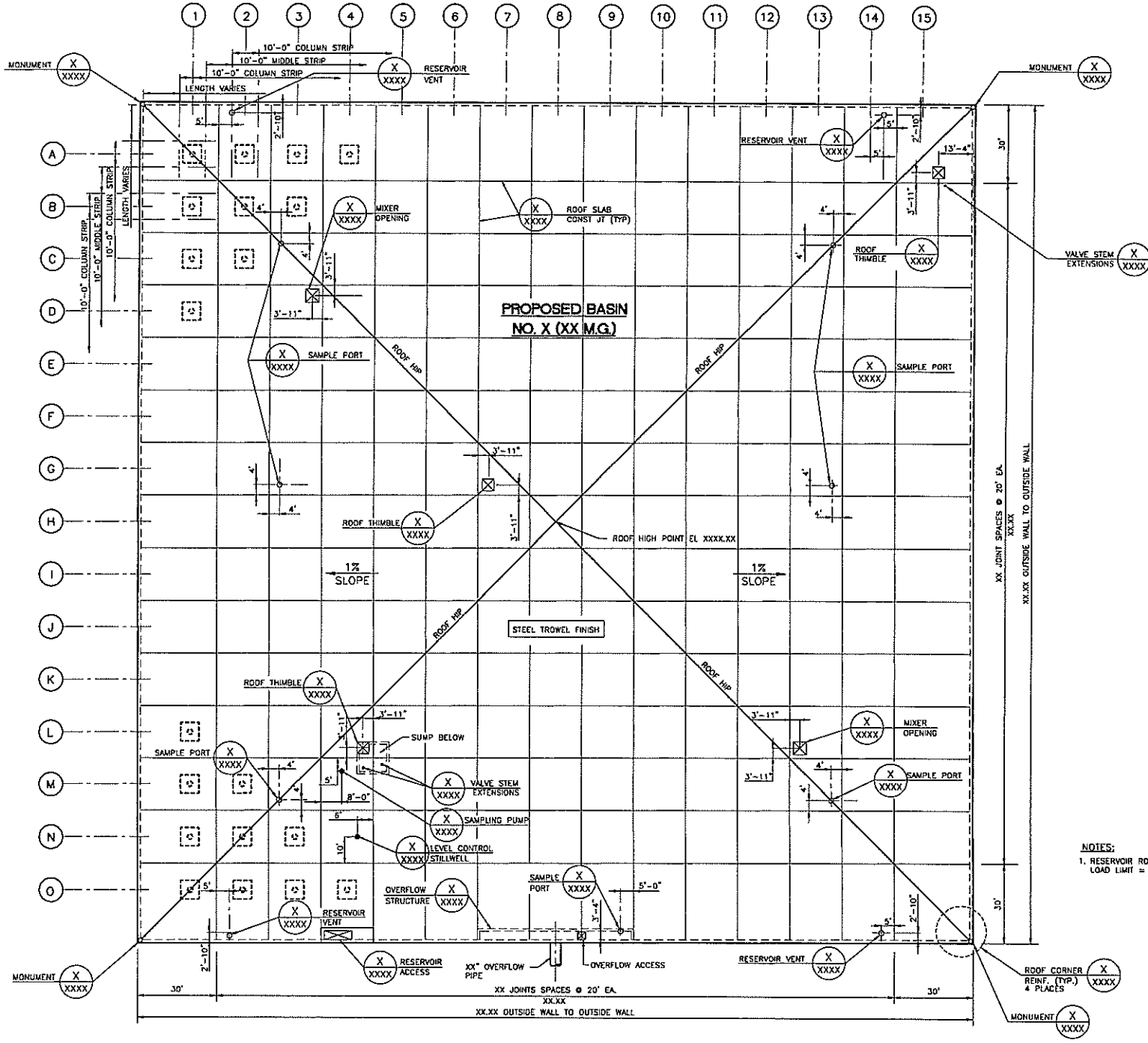

NOTES:

1. RESERVOIR ROOF MAXIMUM VEHICLE LOAD LIMIT = 10,000 LBS

ROOF PLAN

NOT TO SCALE RS12-2 071306

FOR EXAMPLE ONLY

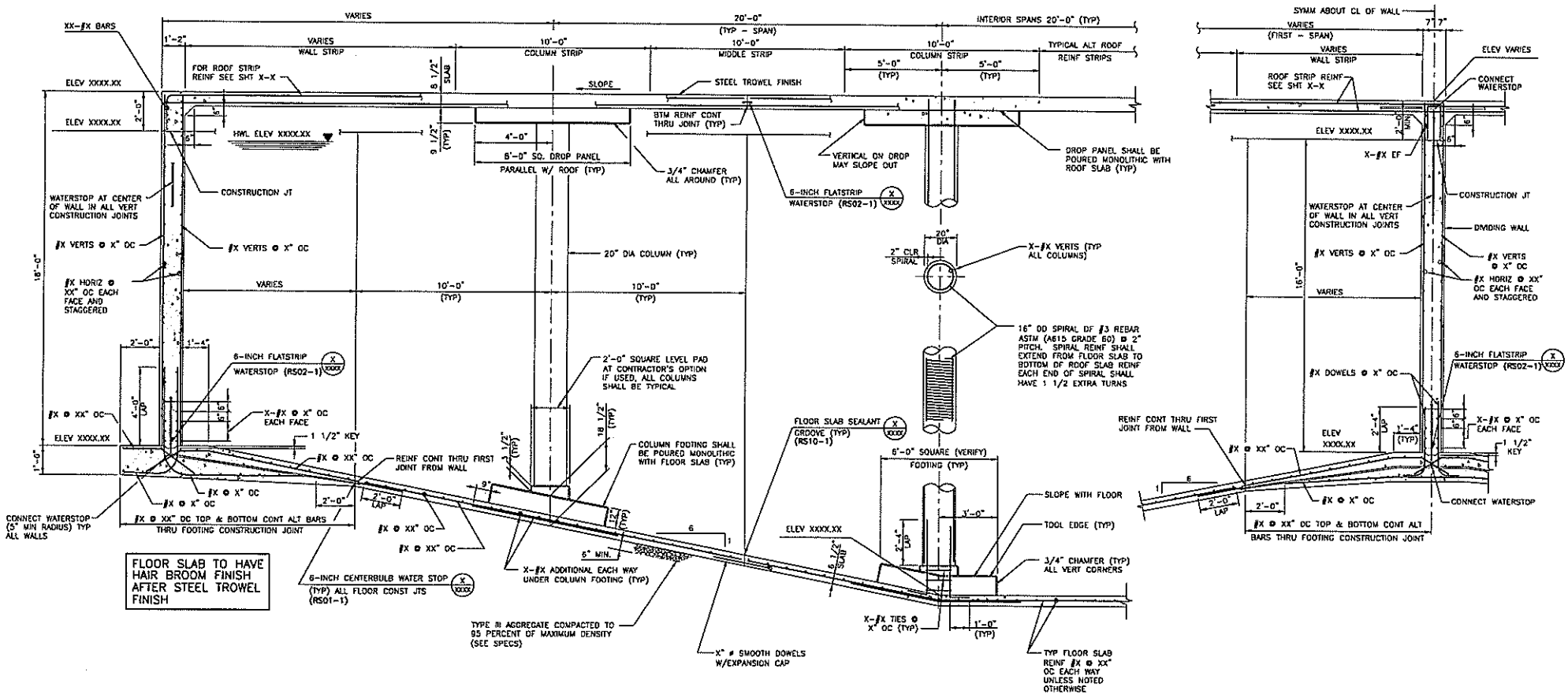

TYPICAL SECTION - 20 MG RESERVOIR - TWO BASIN

NOT TO SCALE RS12-A 071805

FOR EXAMPLE ONLY

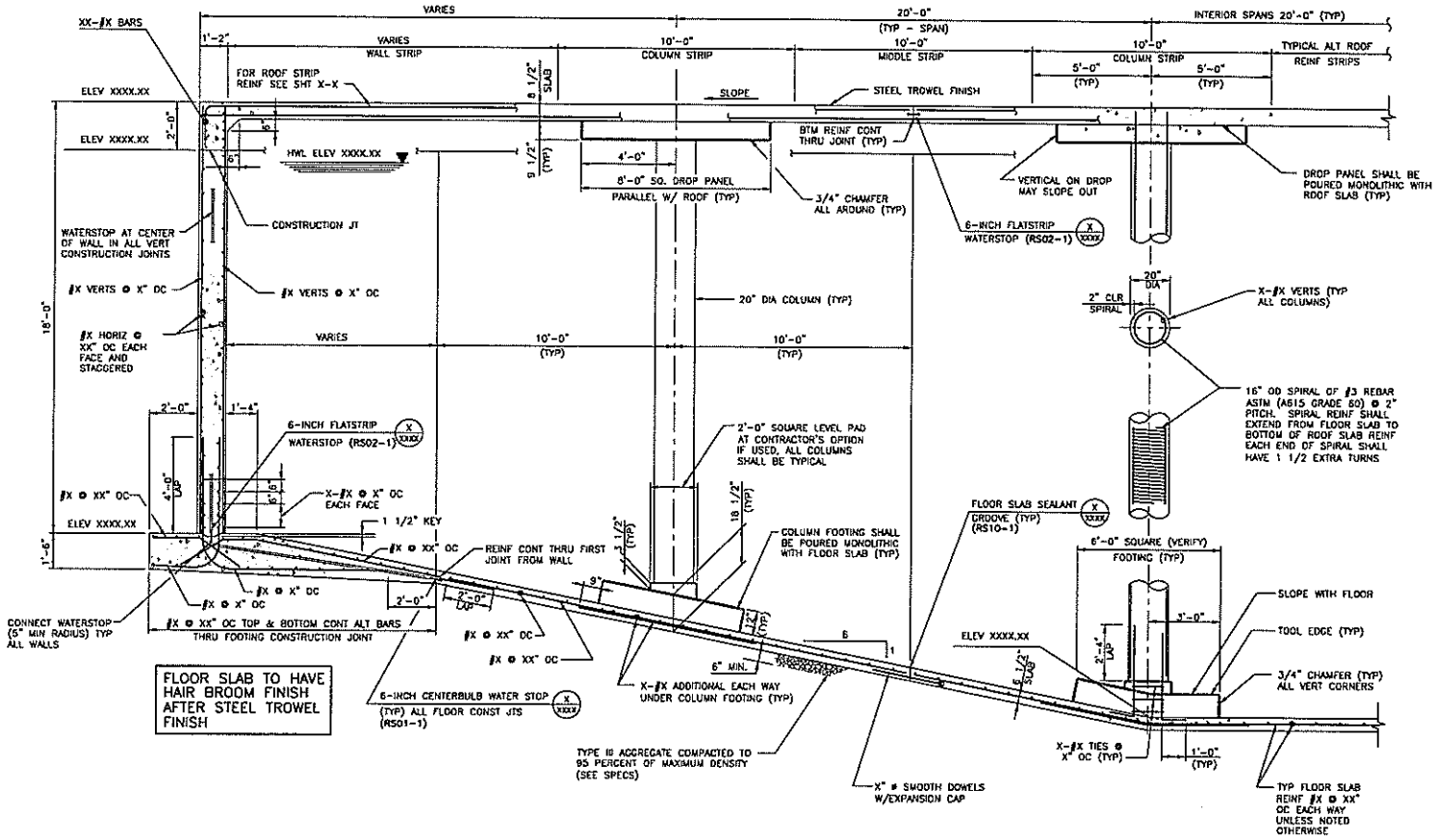

TYPICAL SECTION - 10 MG RESERVOIR - SINGLE BASIN

NOT TO SCALE RS12-B 071806

FOR EXAMPLE ONLY

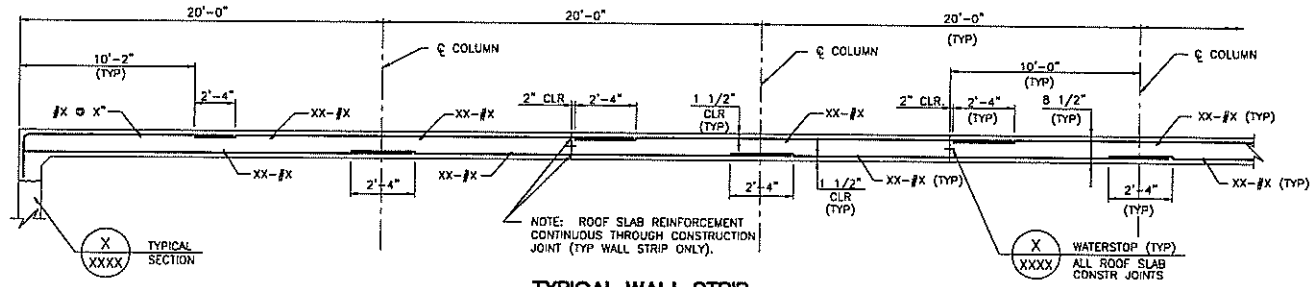

TYPICAL WALL STRIP

SCALE: NONE

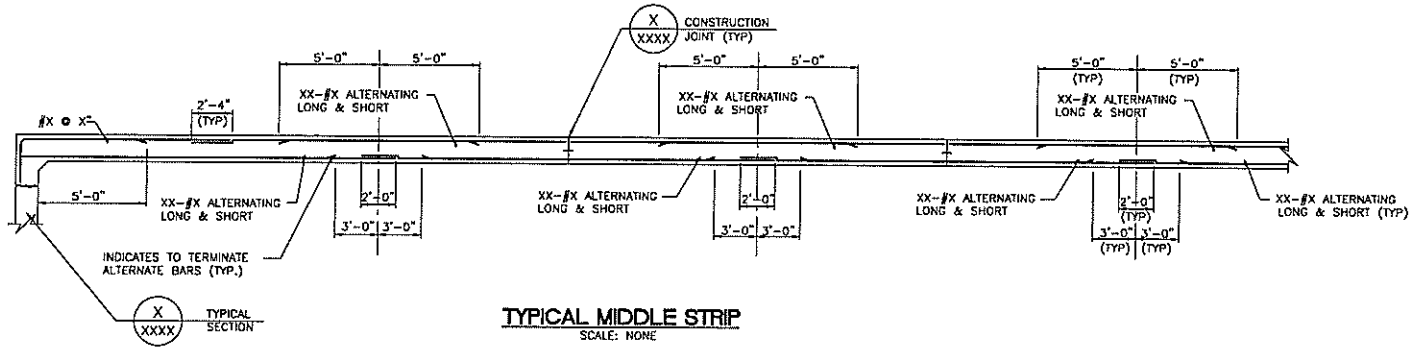

TYPICAL MIDDLE STRIP

SCALE: NONE

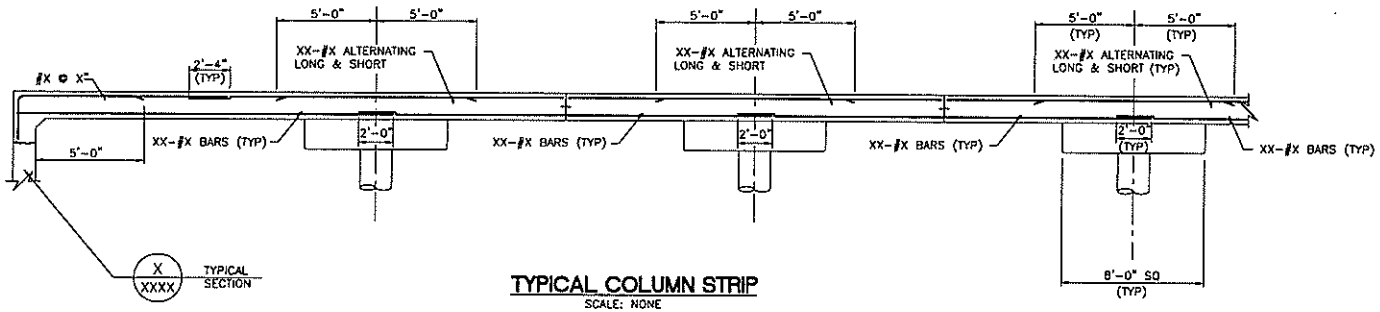

TYPICAL COLUMN STRIP

SCALE: NONE

NOTES:

1. UNLESS OTHERWISE NOTED, ALL ROOF SLAB BARS SHALL BE EQUALLY SPACED WITHIN DESIGNATED STRIPS. (SEE THIS SHEET).
2. WHERE THE SAME BAR GROUPS OF A REINFORCEMENT STRIP INTERSECT, THE LAYERS SHALL BE STACKED WITH THE OUTER LAYER HAVING A COVER OF 1 1/2".
3. FOR ADDITIONAL REINFORCEMENT AT ROOF ACCESS OPENINGS AND LIFTING EYES, SEE DETAILS X/XX.
4. METAL BAR SUPPORTS OR SPACERS, SHALL NOT MAKE CONTACT WITH FORMS. AT COLUMNS TOP REINFORCEMENT OF ROOF MAY BE WIRED TO COLUMN VERTICALS.
5. FOR WALL REINFORCEMENT AT ROOF SLAB SEE SECTION X/XX.
6. FOR ROOF PLAN SEE SHEET XX.

ROOF SLAB REINFORCEMENT

NOT TO SCALE RS12-C 071806

FOR EXAMPLE ONLY

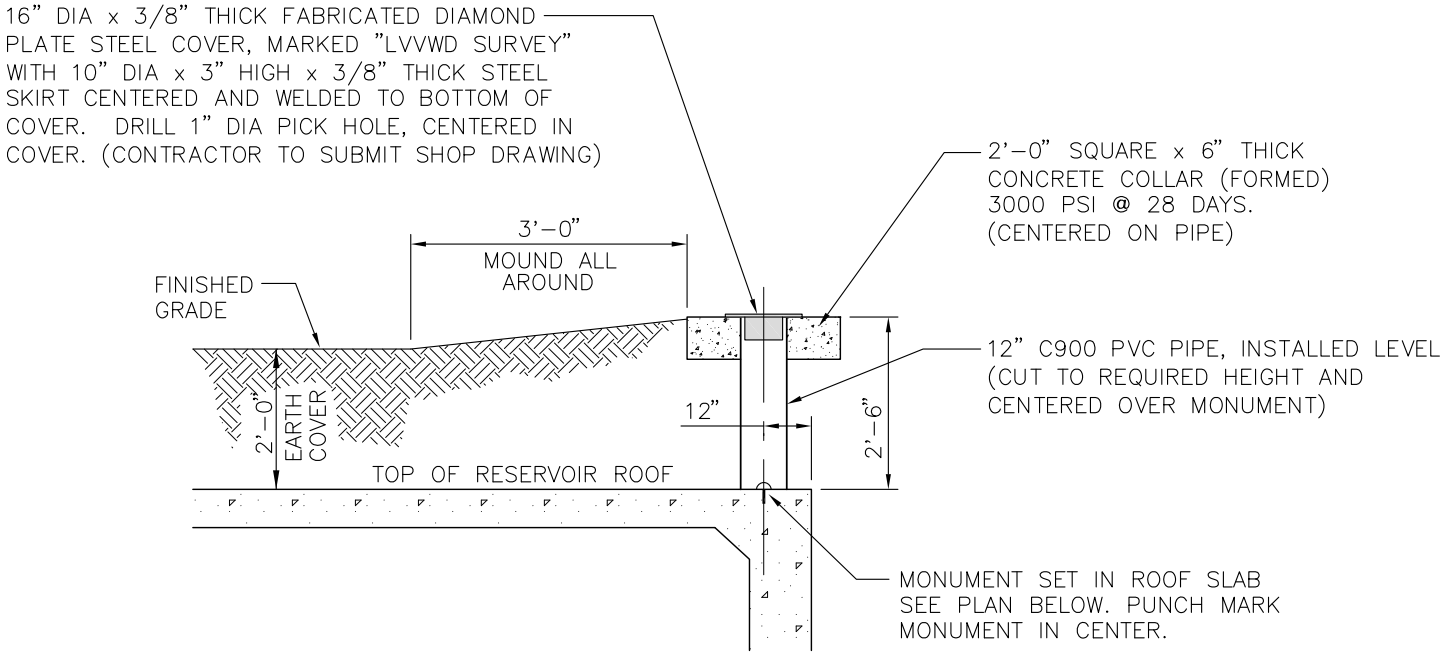

ELEVATION

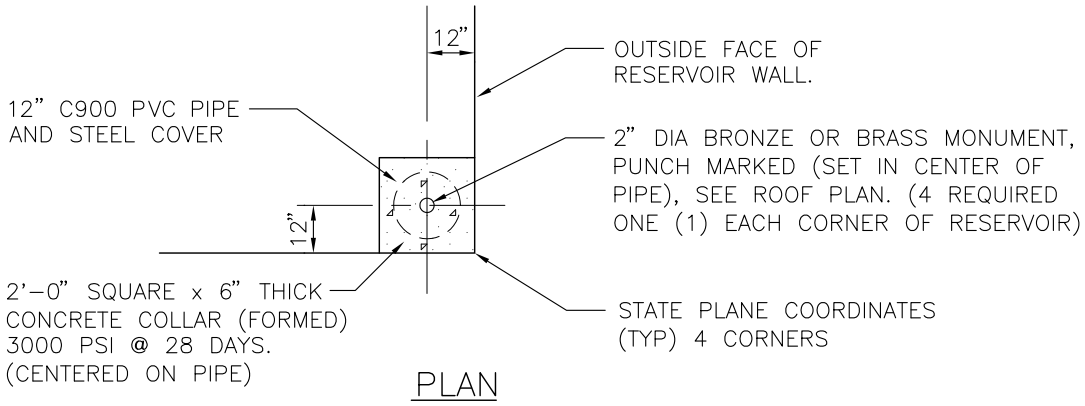

PLAN

NOTE:
INSTALL PIPE, STEEL COVER AND BACKFILL ONLY AFTER MONUMENT HAS BEEN INSTALLED AND APPROVED BY LVVWD ENGINEER OR SURVEYOR (TYP).

RESERVOIR SURVEY MONUMENT

NOT TO SCALE RS12-3 122711

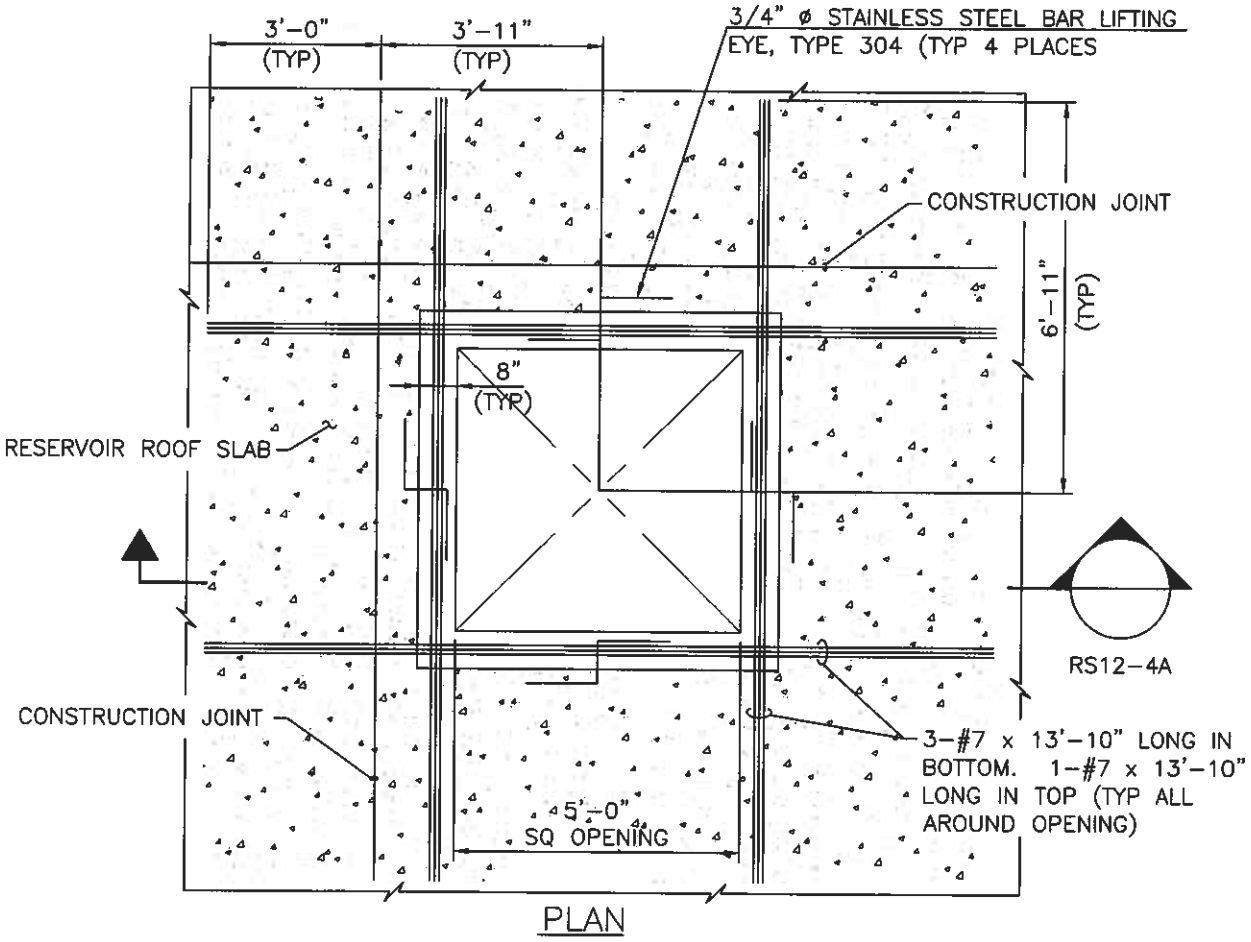

ROOF THIMBLE

NOT TO SCALE RS12-4 061908

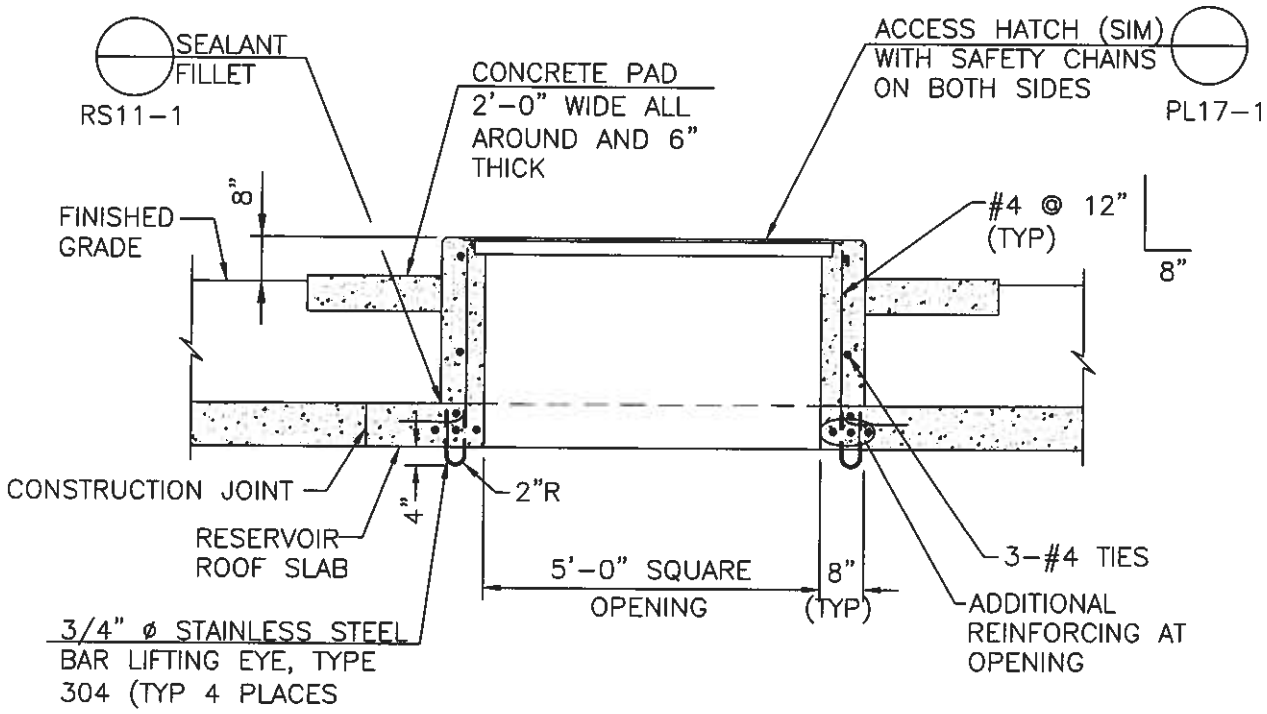

SECTION

NOT TO SCALE

RS12-4A 061908

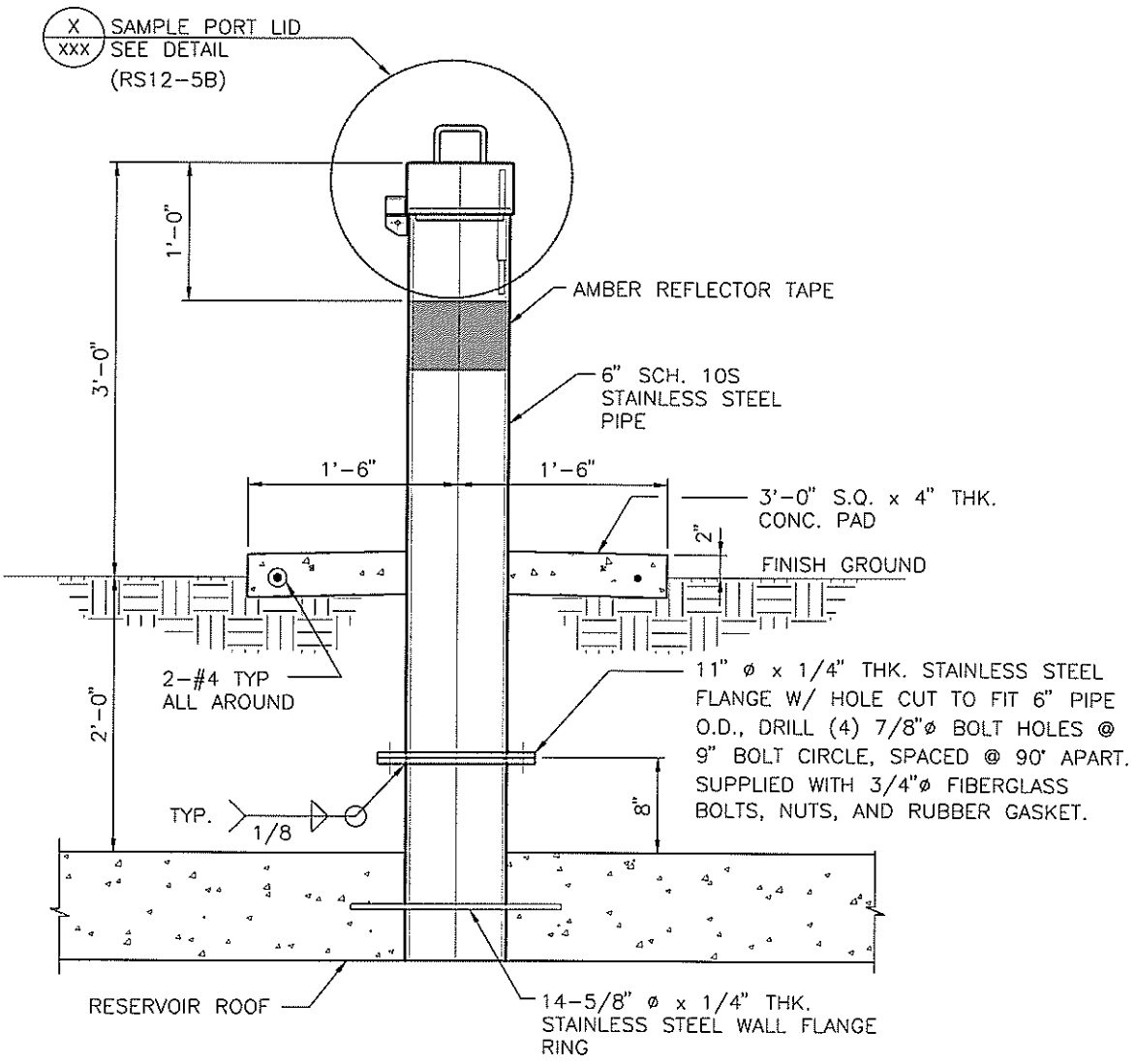

FOR EXISTING RESERVOIR INSTALLATION, CUT & REMOVE EXISTING 6" SAMPLE PORT PIPE AS SHOWN. WELD 11" ø x 1/4" THK. STAINLESS STEEL FLANGE W/ HOLE CUT TO FIT EXISTING 6" PIPE O.D., DRILL (4) 7/8"ø BOLT HOLES @ 9" BOLT CIRCLE SPACED @ 90° APART TO MATCH NEW 6" SAMPLE PORT FLANGE.

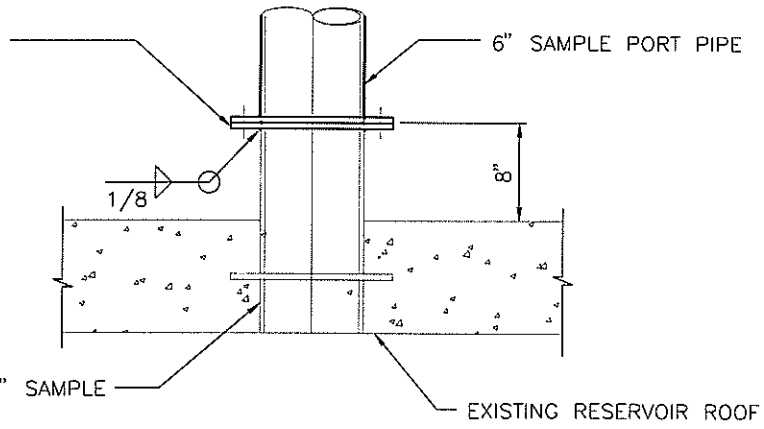

NOTE:

MATERIAL FOR PIPE, PLATE, BAR, FITTINGS, AND ALL HARDWARE TO BE TYPE 316, STAINLESS STEEL, UNLESS OTHERWISE NOTED.

SAMPLING PORT DETAIL

NOT TO SCALE RS12-5A 060805

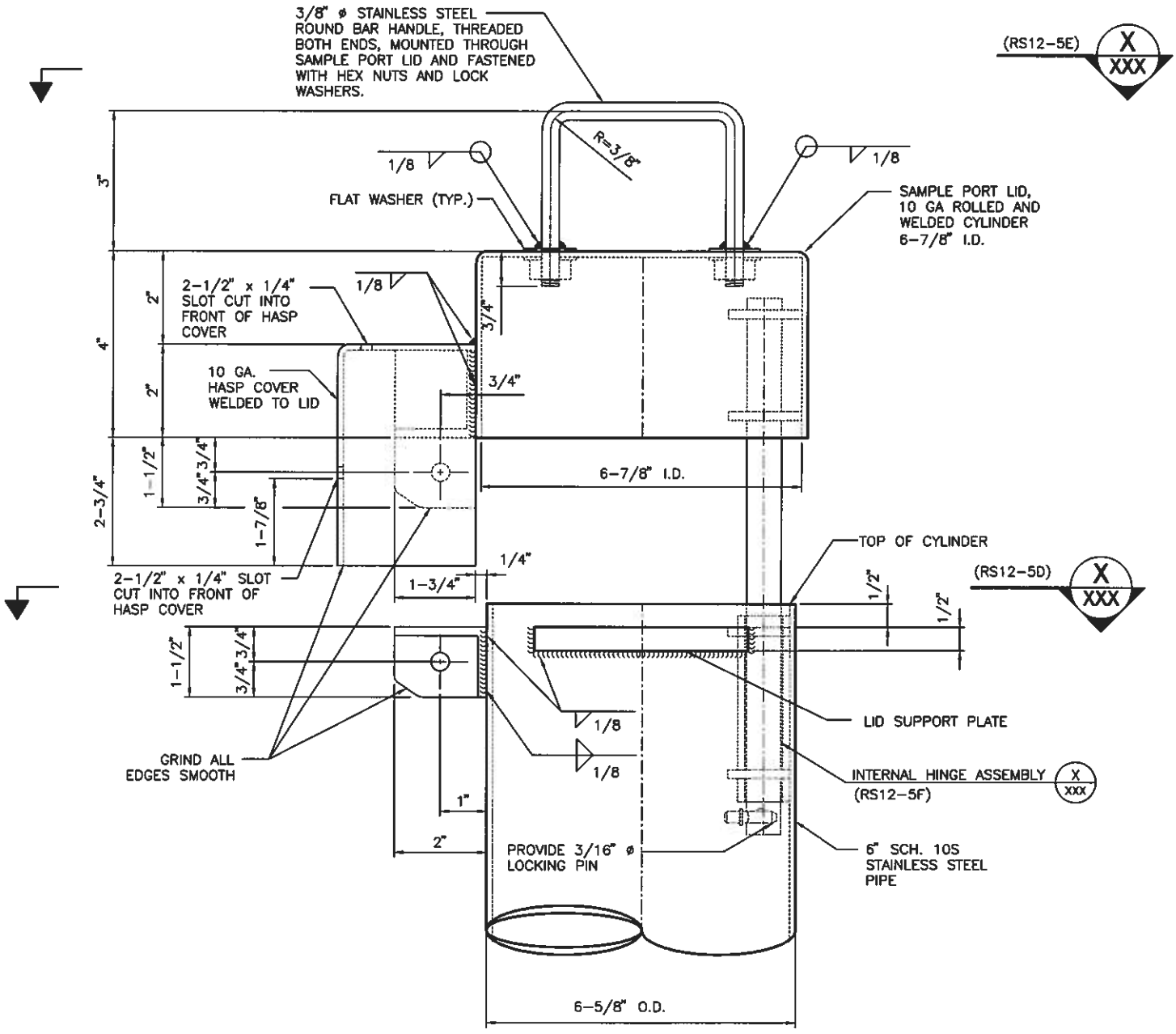

SAMPLE PORT LID DETAIL

NOT TO SCALE RS12-5B 022409

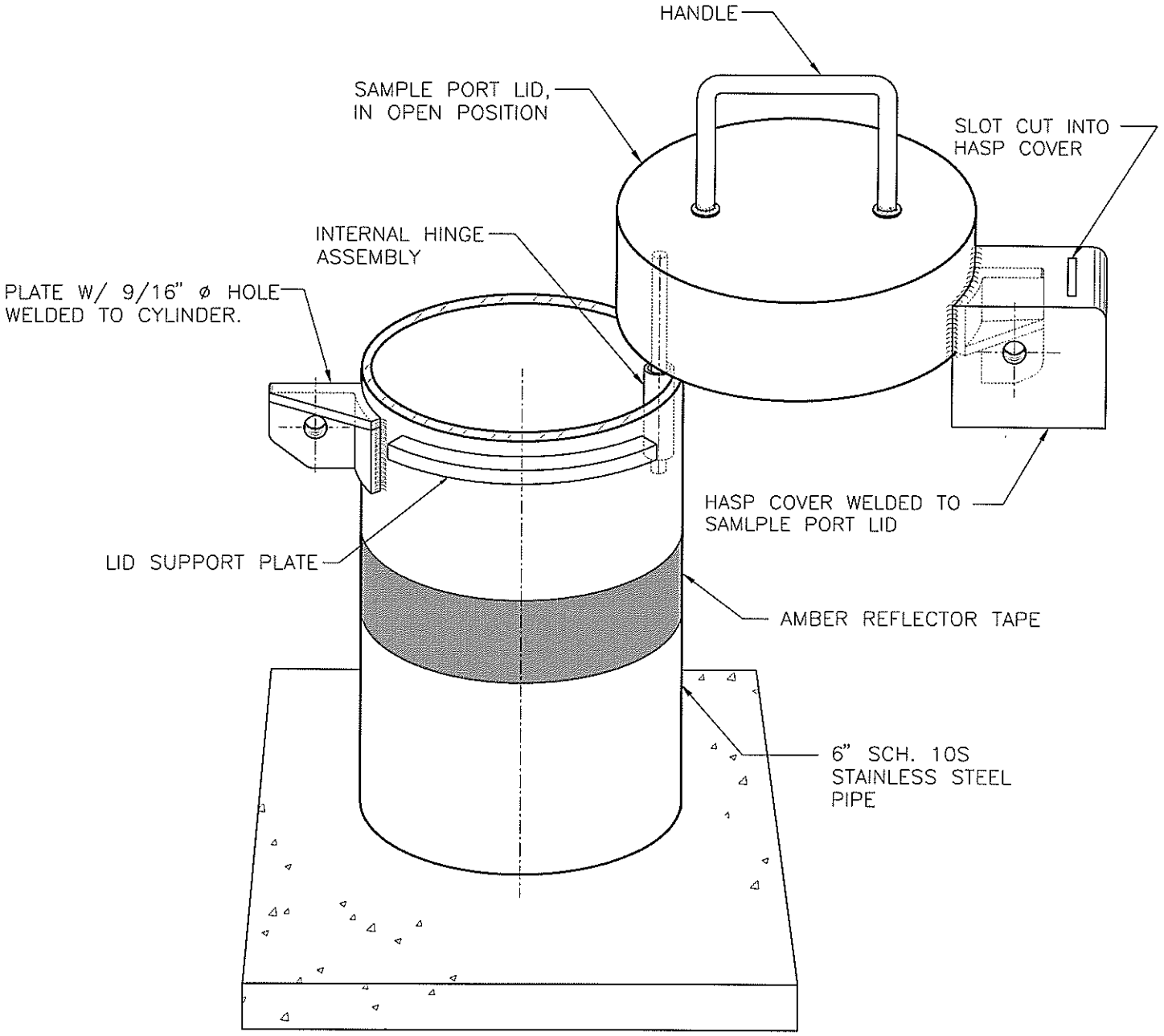

SAMPLE PORT ISOMETRIC VIEW

NOT TO SCALE RS12-5C 052705

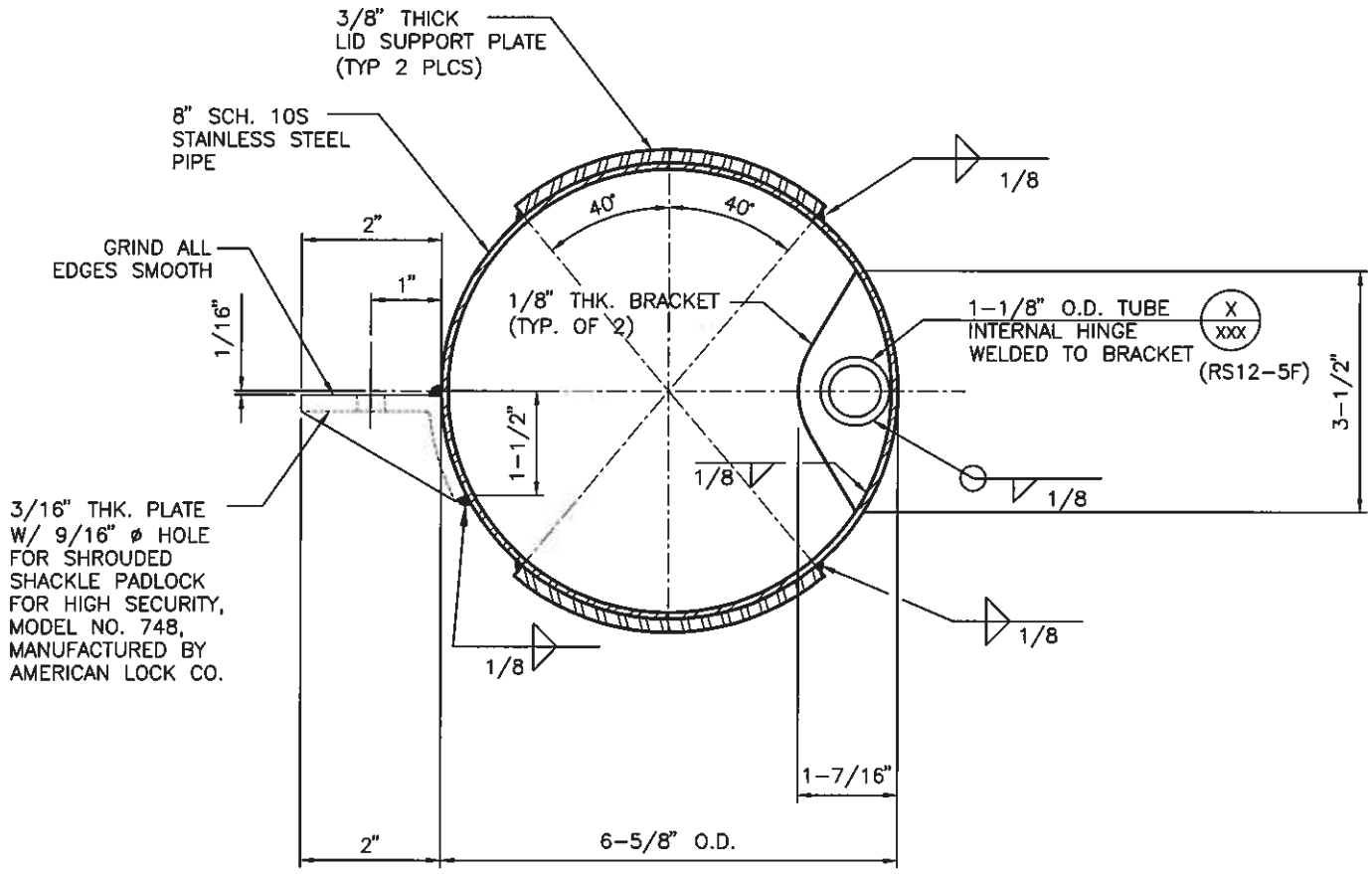

TOP VIEW

SAMPLE PORT CYLINDER

NOT TO SCALE RS12-5D 022409

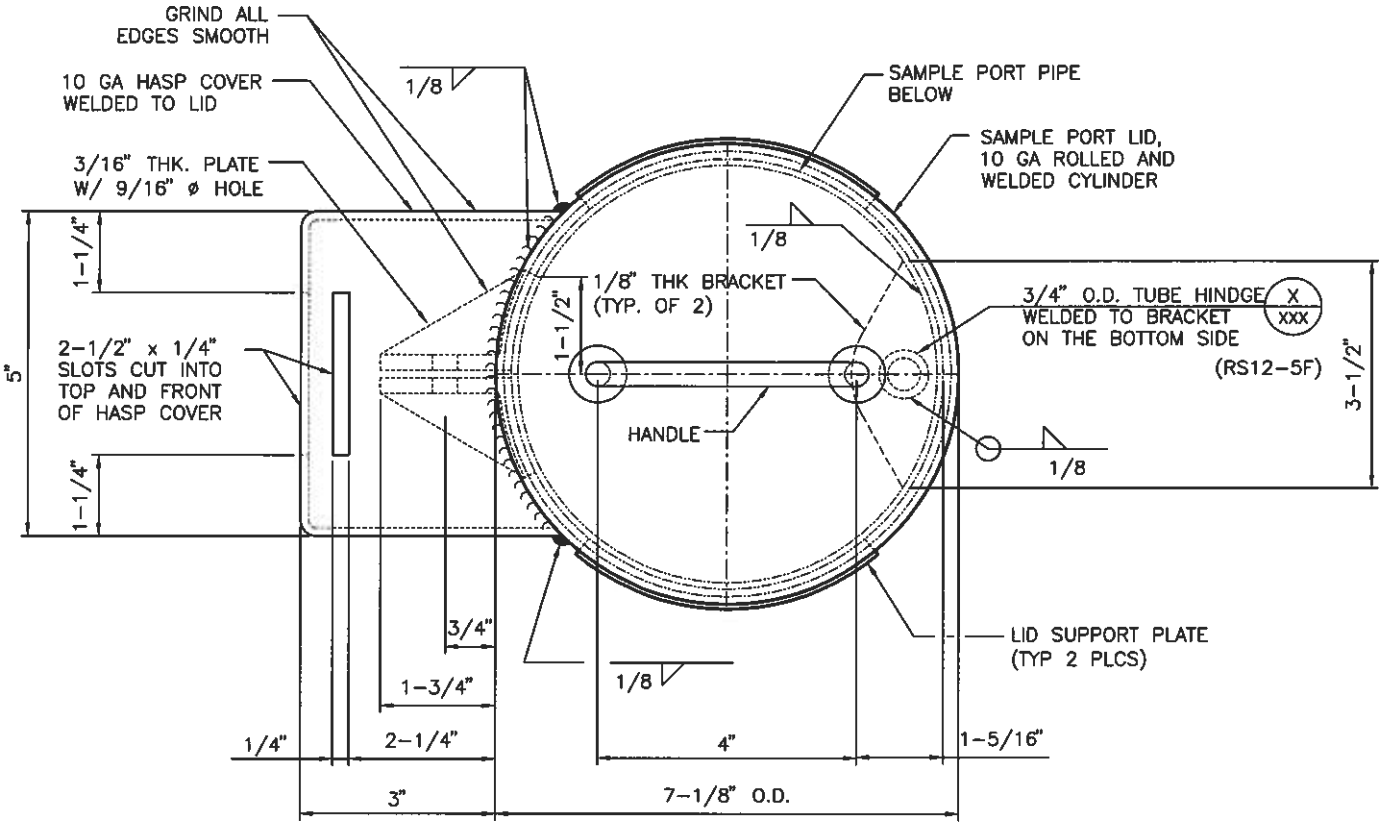

TOP VIEW

SAMPLE PORT LID

NOT TO SCALE RS12-5E 022409

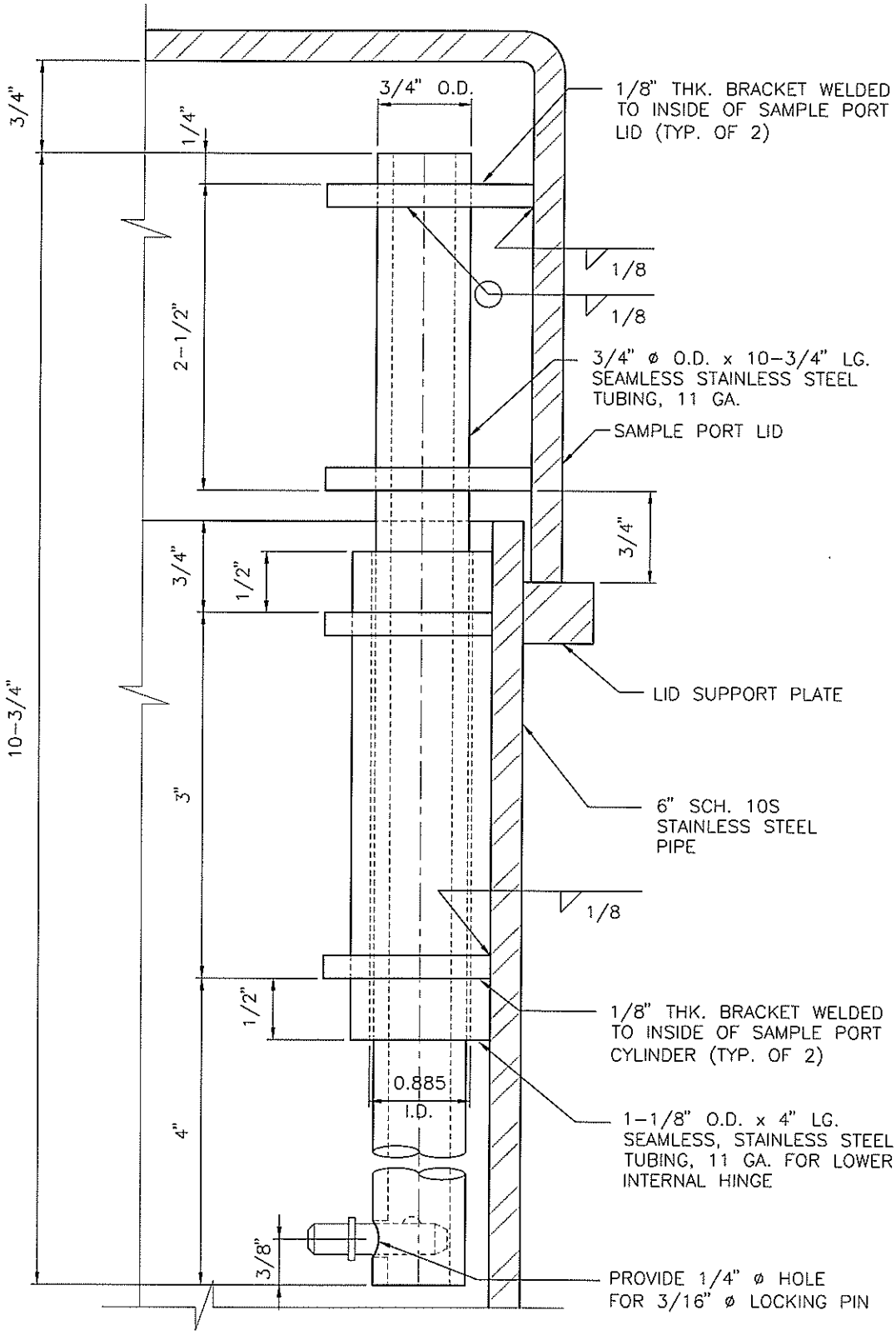

INTERNAL HINGE ASSEMBLY IN CLOSE POSITION

NOT TO SCALE RS12-5F 042105

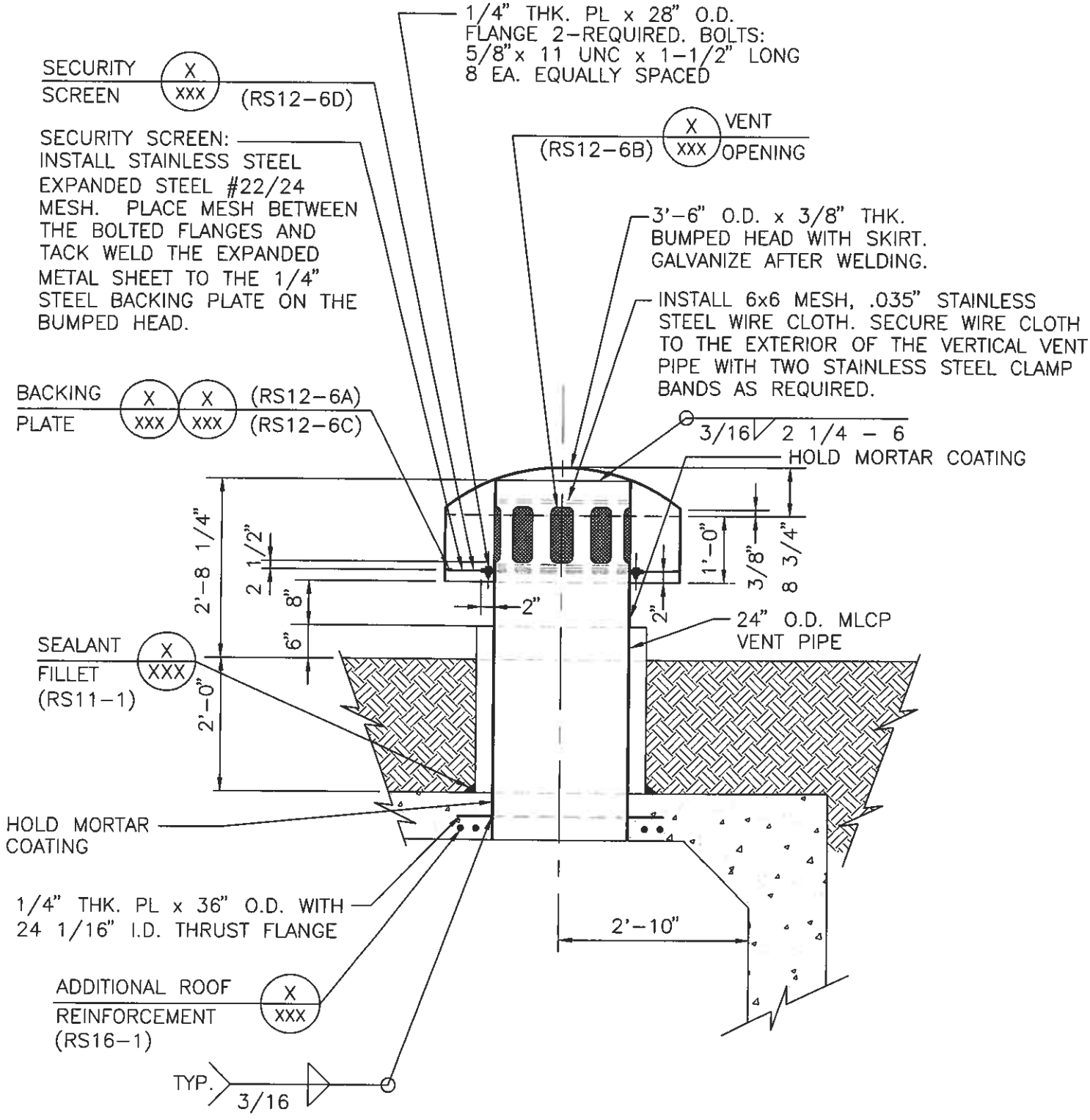

RESERVOIR VENT

NOT TO SCALE

RS12-6 090808

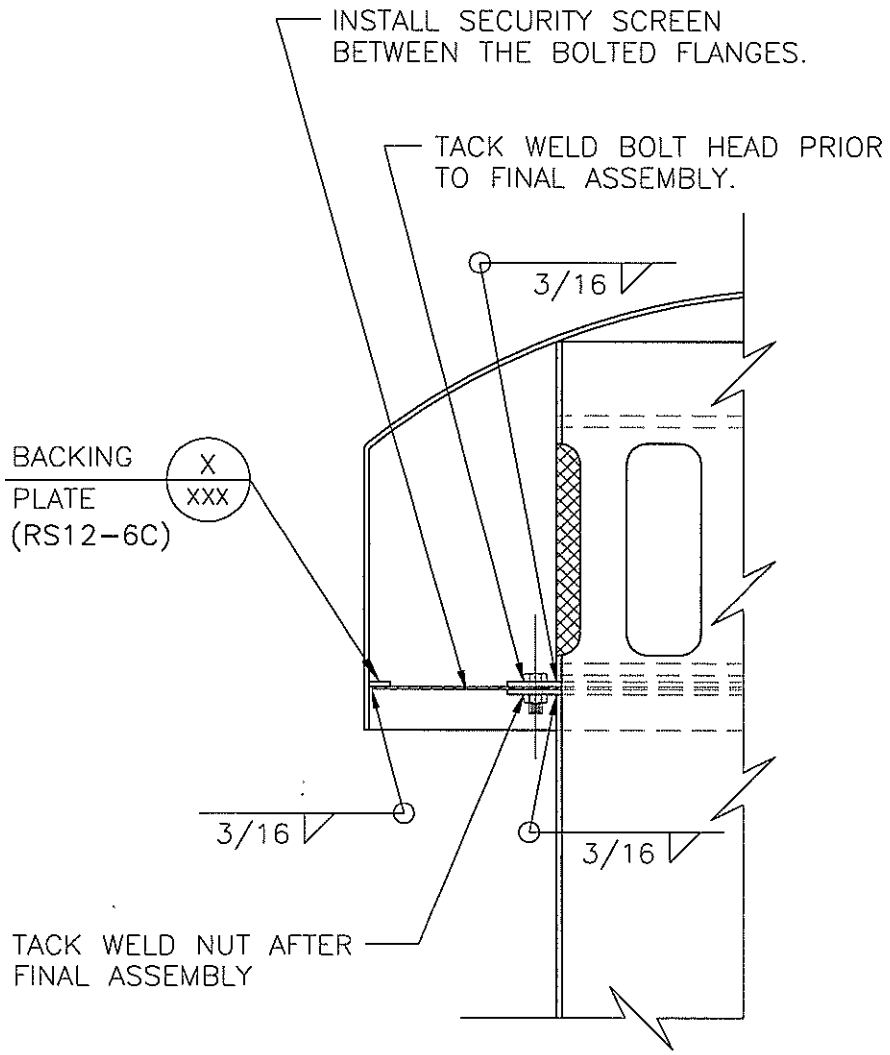

DETAIL-BACKING PLATE INSTALLATION

NOT TO SCALE RS12-6A 021406

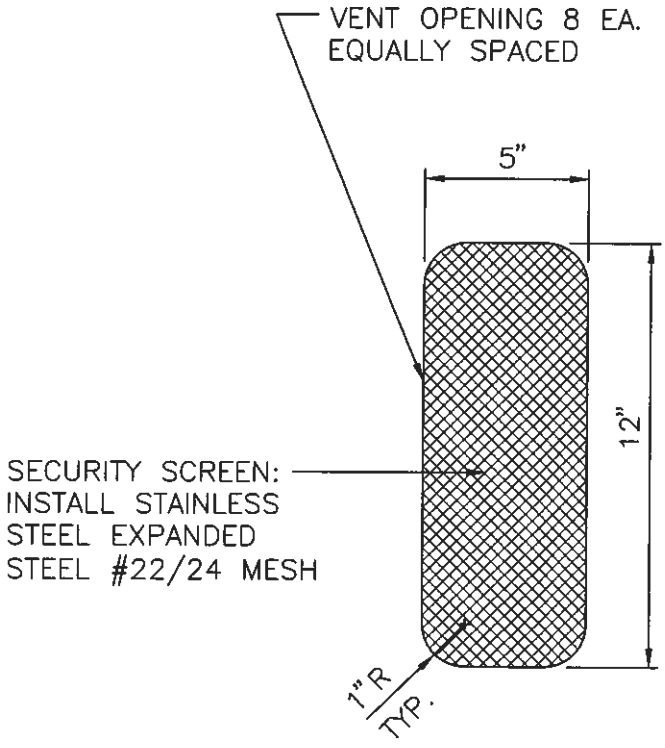

DETAIL-VENT OPENING

NOT TO SCALE RS12-6B 090808

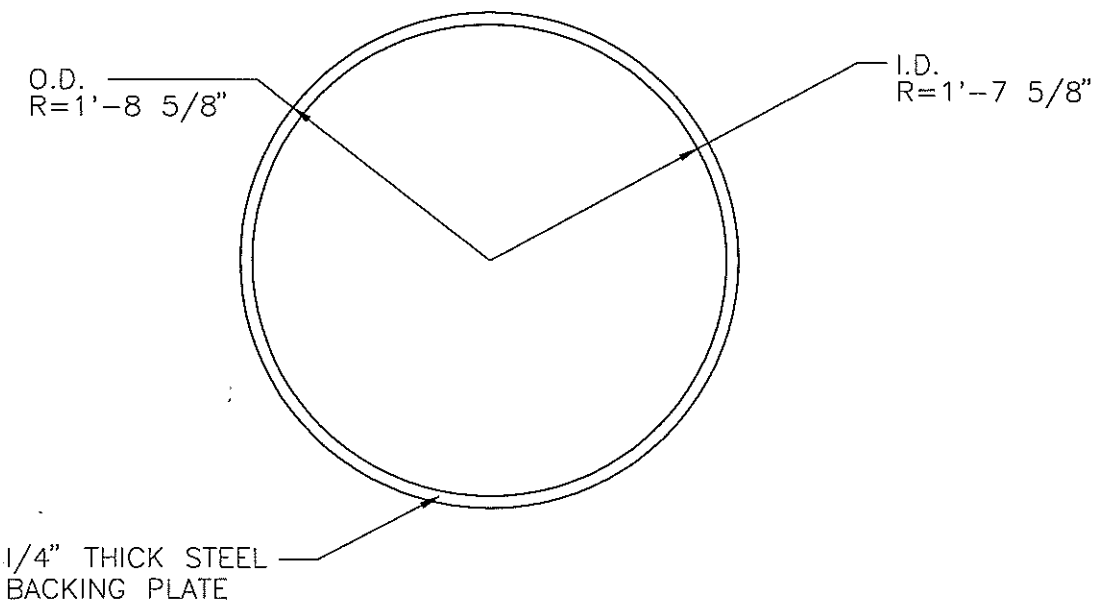

DETAIL-BACKING PLATE

NOT TO SCALE RS12-6C 021406

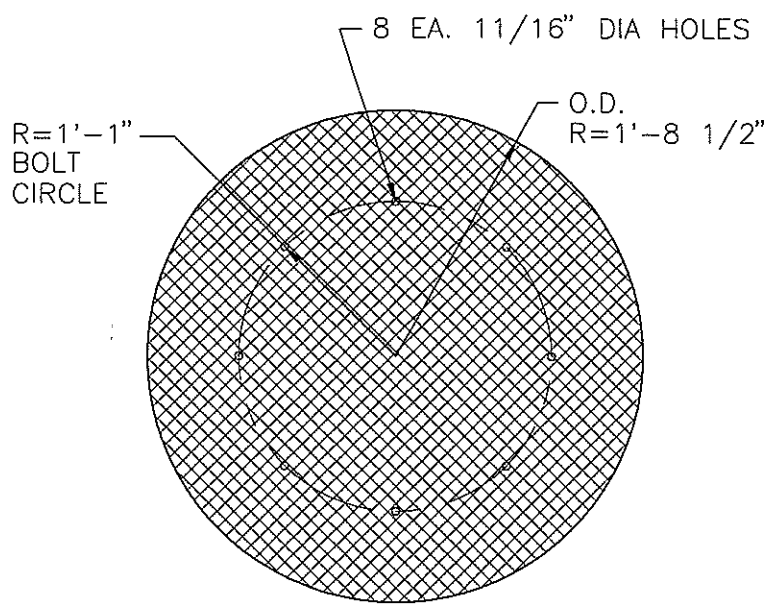

DETAIL-SECURITY SCREEN

NOT TO SCALE

RS12-6D 021406

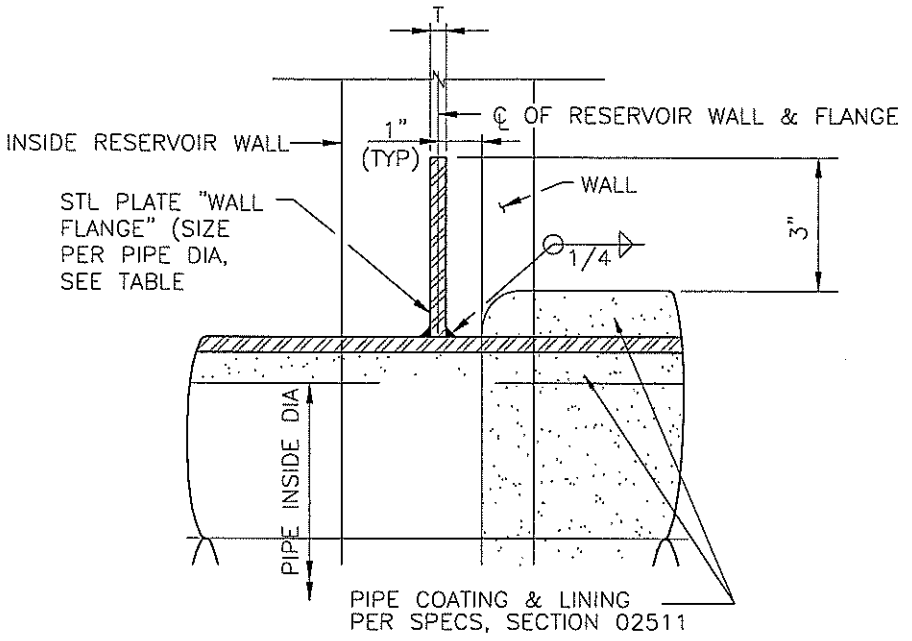

TABLE	
NOM PIPE DIA	FLANGE THK T
(IN)	(IN)
36	3/8
42	3/8
48	3/8
54	3/8
60	5/8
66	5/8
72	5/8

RESERVOIR WALL FLANGE FOR MLCP

NOT TO SCALE RS13-1 080306

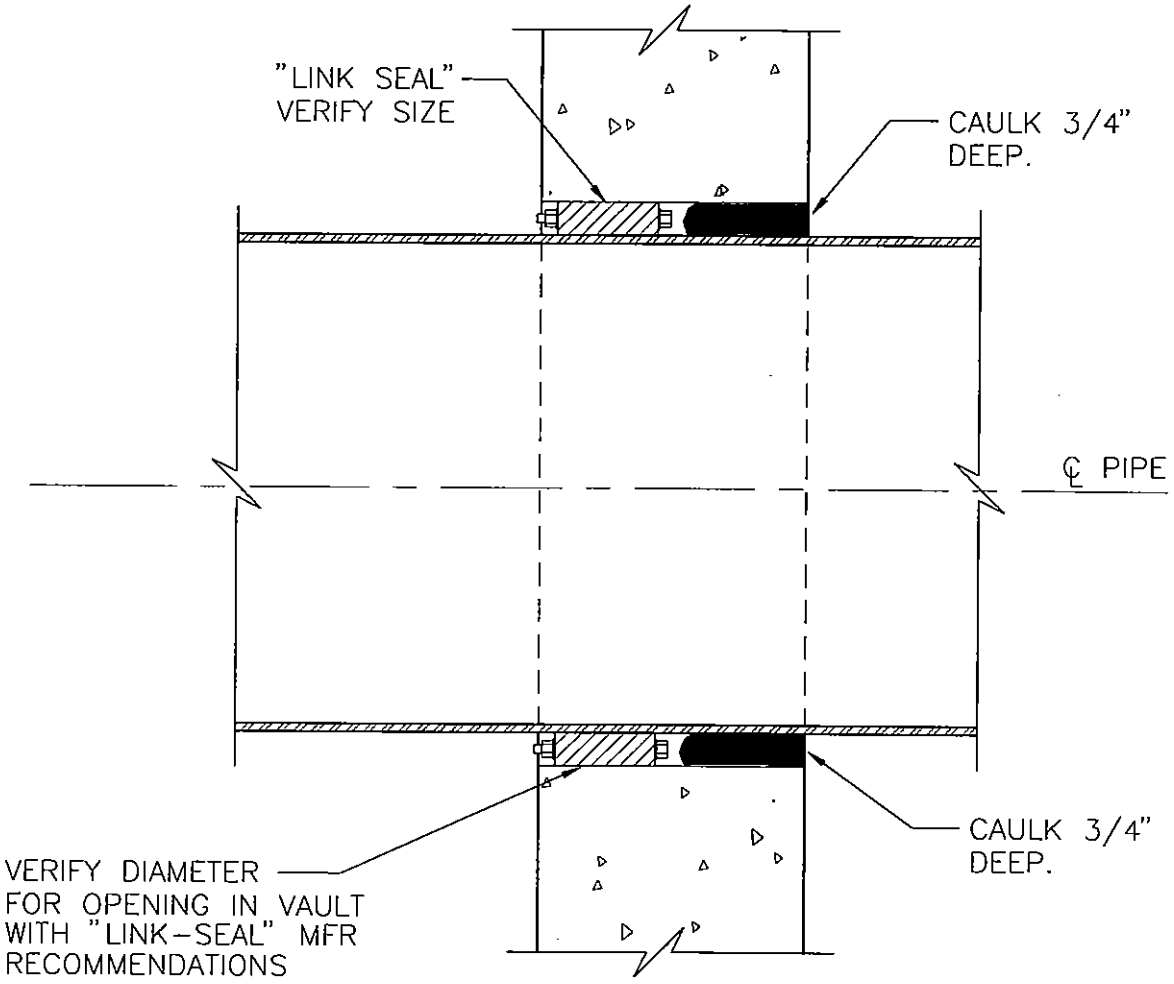

"LINK SEAL" TYPE

PIPE PENETRATION

NOT TO SCALE

RS15-1 070803

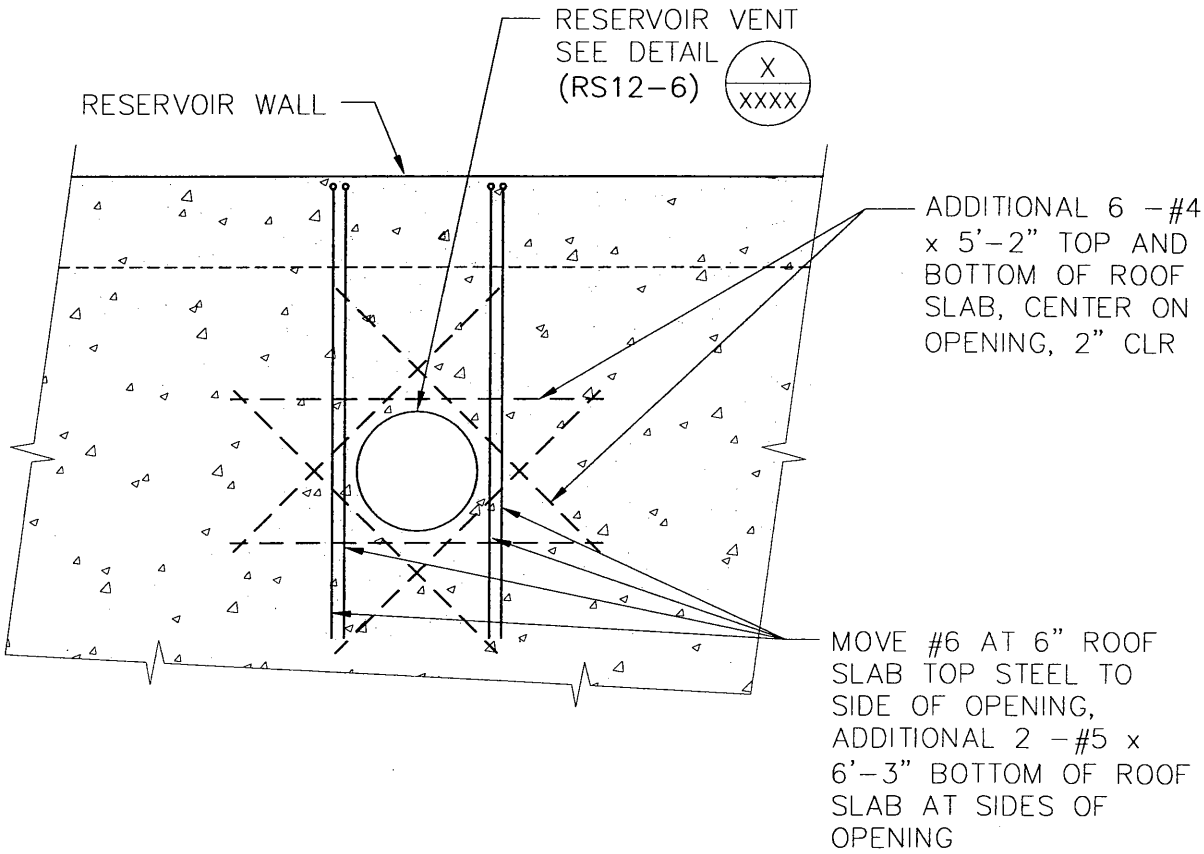

RESERVOIR VENT ROOF REINFORCEMENT

NOT TO SCALE

RS16-1 052504

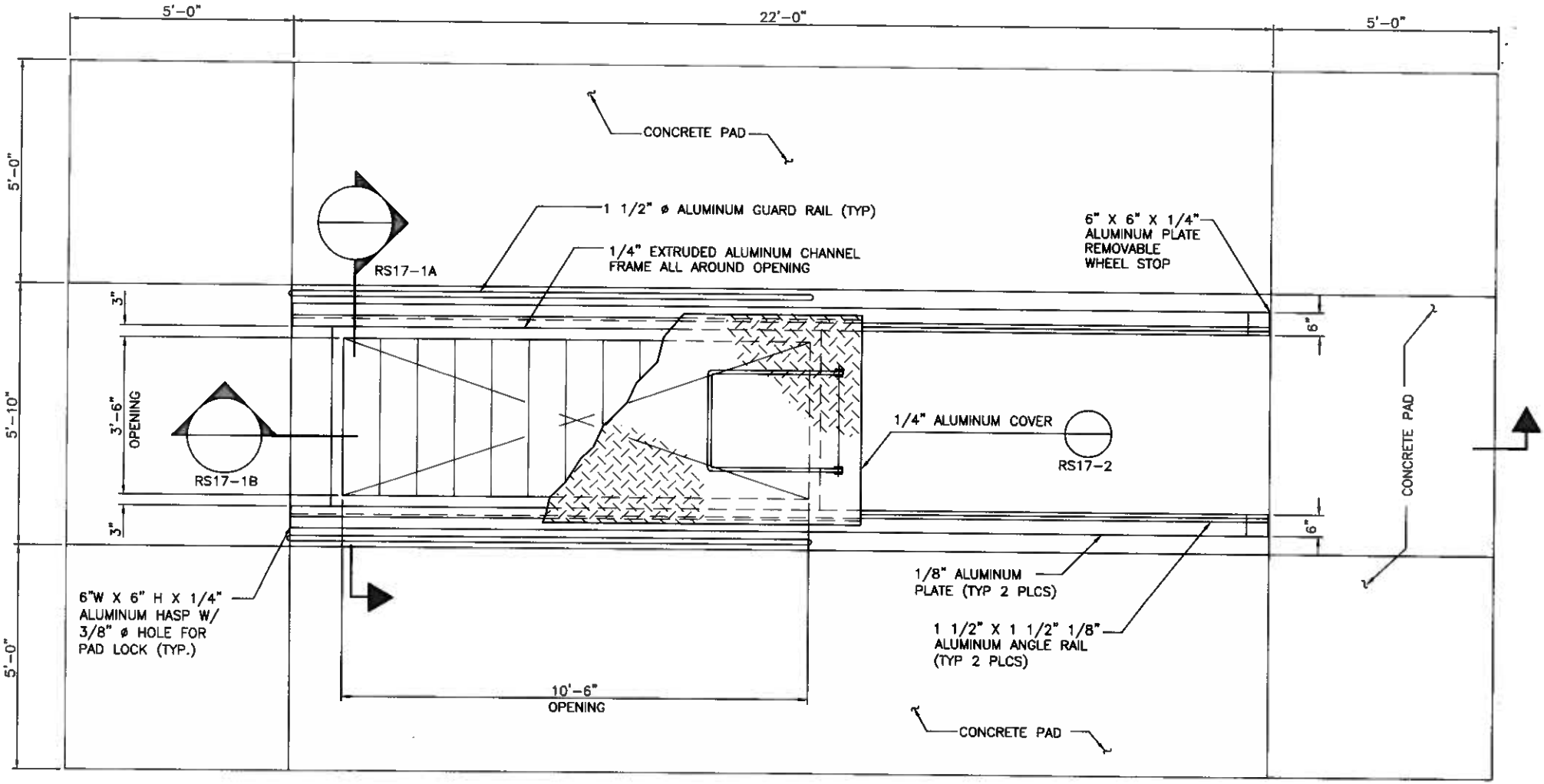

PLAN

RESERVOIR ACCESS HATCH

NOT TO SCALE

RS17-1 061908

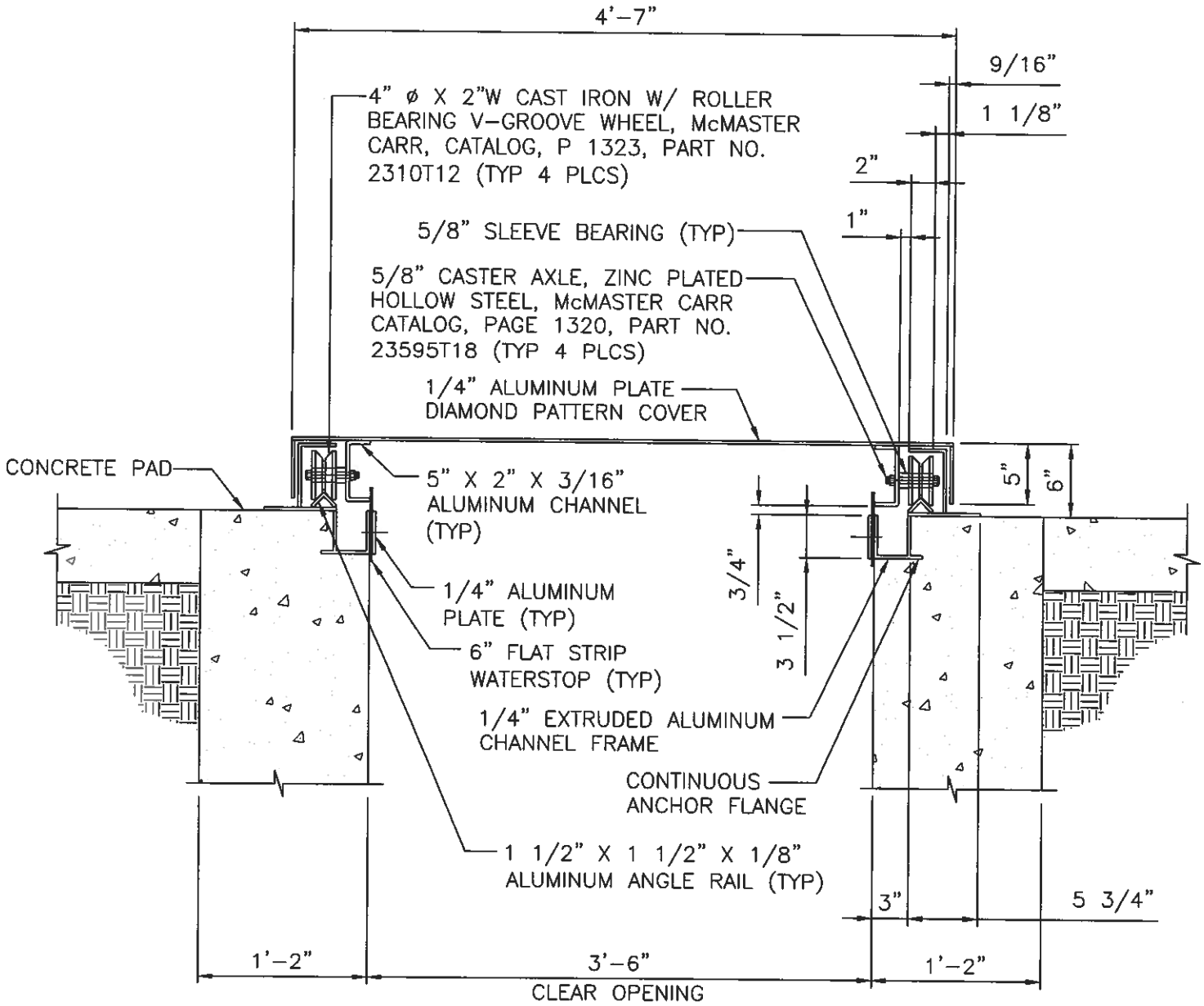

SECTION

RESERVOIR ACCESS HATCH

NOT TO SCALE RS17–1A 061808

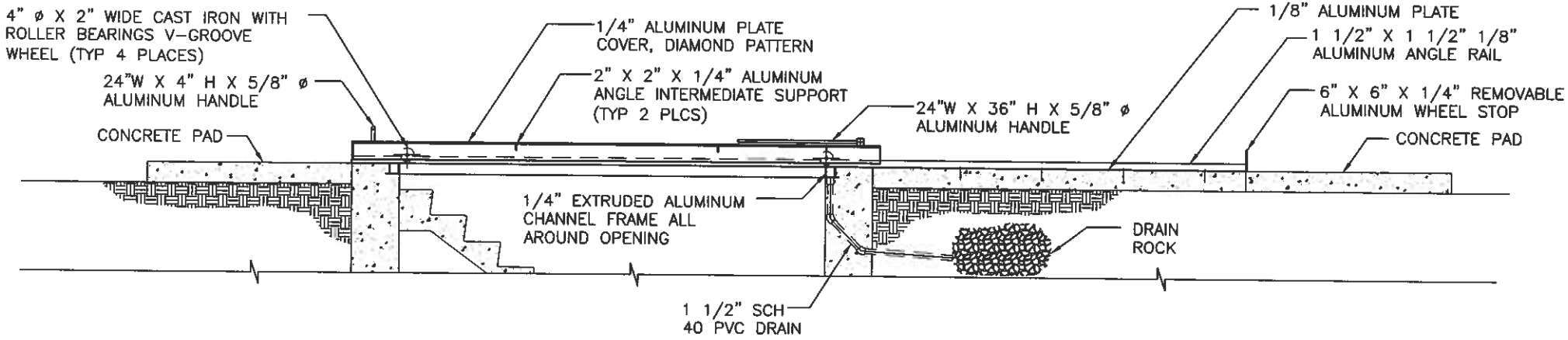

SECTION

NOT TO SCALE RS17-1B 110600

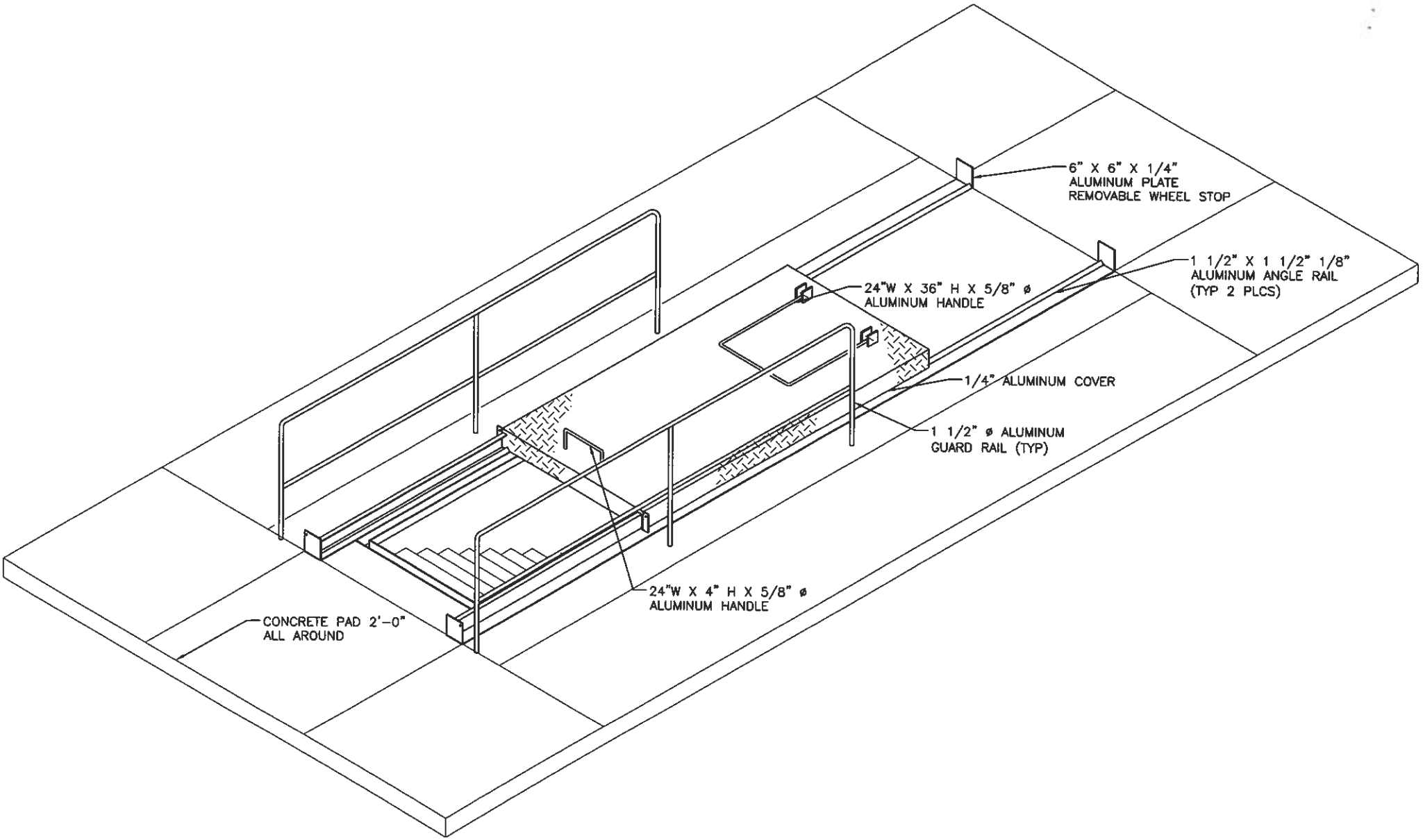

ISOMETRIC VIEW

NOT TO SCALE RS17-1C 061808

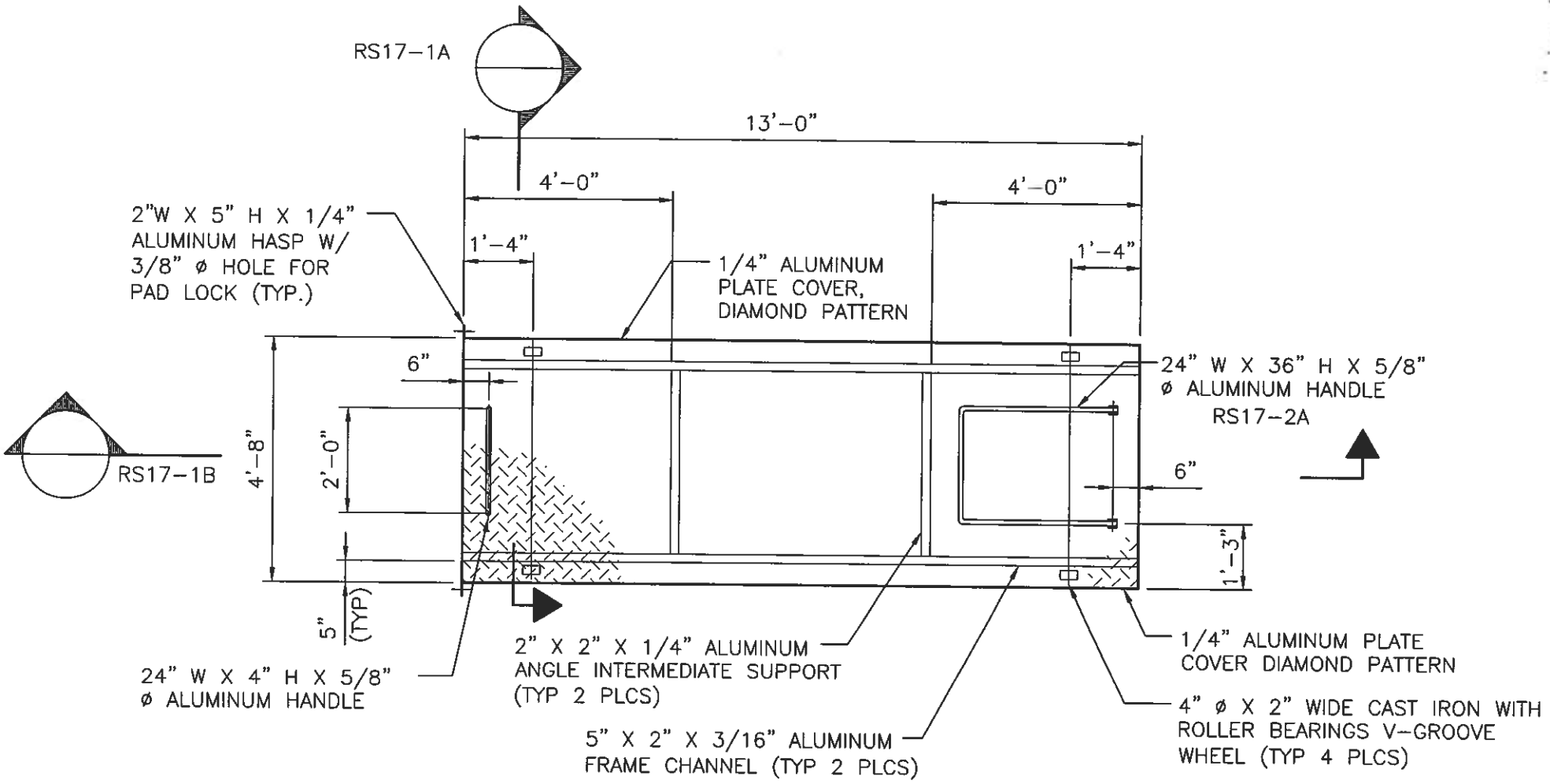

ALUMINUM COVER

NOT TO SCALE RS17-2 061808

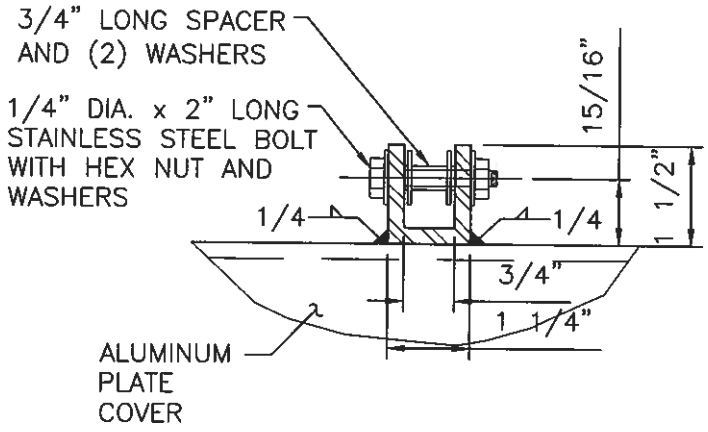

ALUMINUM HANDLE

NOT TO SCALE RS17–2A 061808

LAS VEGAS VALLEY WATER DISTRICT
DESIGN DETAIL STANDARDS

TABLE OF CONTENTS

DESCRIPTION	REV. DATE	DWG NO.

PUMP STATIONS

To be issued at a future date.

LAS VEGAS VALLEY WATER DISTRICT
DESIGN DETAIL STANDARDS

TABLE OF CONTENTS

DESCRIPTION	REV. DATE	DWG NO.
WELLS		
DISINFECTION BUILDING		
Handrail and Stair Detail	07-08-03	WE01-1
Post Insert in Concrete Detail	07-08-03	WE01-2
Disinfection Building – Floor Plan	07-08-03	WE01-3
Items Description	01-24-01	WE01-4
Elevation	07-09-03	WE01-A
Elevation	07-09-03	WE01-B
Section	07-09-03	WE01-C
Section	07-09-03	WE01-D
Elevation	07-09-03	WE01-E
Section	07-09-03	WE01-F
CONTROL BUILDING		
Control Building – Floor Plan	07-09-03	WE02-1
Items Description	01-24-01	WE02-2
Section	07-09-03	WE02-A
Section	07-09-03	WE02-B
Elevation	07-09-03	WE02-C
Elevation	07-09-03	WE02-D
Elevation	07-09-03	WE02-E
DISINFECTION SOLUTION PIPING		
Chlorine Solution Piping Plan	07-09-03	WE03-1
Items Description	01-24-01	WE03-2
Section	07-09-03	WE03-A
Section	07-09-03	WE03-B
Section	07-09-03	WE03-C
ROOF FRAMING		
Control and Disinfection Building – Roof Plan	07-09-03	WE04-1
Section	07-09-03	WE04-A
Roof Vent Flashing Detail	07-09-03	WE04-B
Block Wall	05-07-04	WE05-1
Block Wall Expansion Joint	07-18-03	WE05-2
Typical Footing at Step	05-07-04	WE05-3
Swing Gate Detail	12-21-09	WE06-1
Down Rod Assembly	11-03-09	WE06-2
Down Rod Detail	11-03-09	WE06-3

LAS VEGAS VALLEY WATER DISTRICT
DESIGN DETAIL STANDARDS

TABLE OF CONTENTS

DESCRIPTION	REV. DATE	DWG NO.
Tube Steel Fence Notes	11-03-09	WE06-4
Slide Gate Detail	11-03-09	WE06-5
BARBED WIRE DETAIL	07-09-03	WE07
EXTENSION ARM CONFIGURATION AT STEP IN WALL	07-09-03	WE08
WEAKENED PLANE JOINT	07-09-03	WE09
CONCRETE SLAB EXPANSION JOINT	07-09-03	WE10
FLOOR DRAIN	07-09-03	WE11
TYPICAL CORNER REINFORCING	07-09-03	WE12
NOTICE SIGNS	07-09-03	WE13
DOOR JAMB AND HEAD	07-09-03	WE14
TYPICAL CMU WALL OPENING	07-09-03	WE15
CMU Wall Section	07-09-03	WE15-A
CMU Wall Section	07-09-03	WE15-B
EXAMPLE SITE PLAN	01-19-00	WE16
EXAMPLE PIPING PLAN AND PROFILE	01-19-00	WE17
EXAMPLE DRAINAGE DISCHARGE PLAN AND PROFILE	01-19-00	WE18
EXAMPLE MISCELLANEOUS DETAILS	01-19-00	WE19

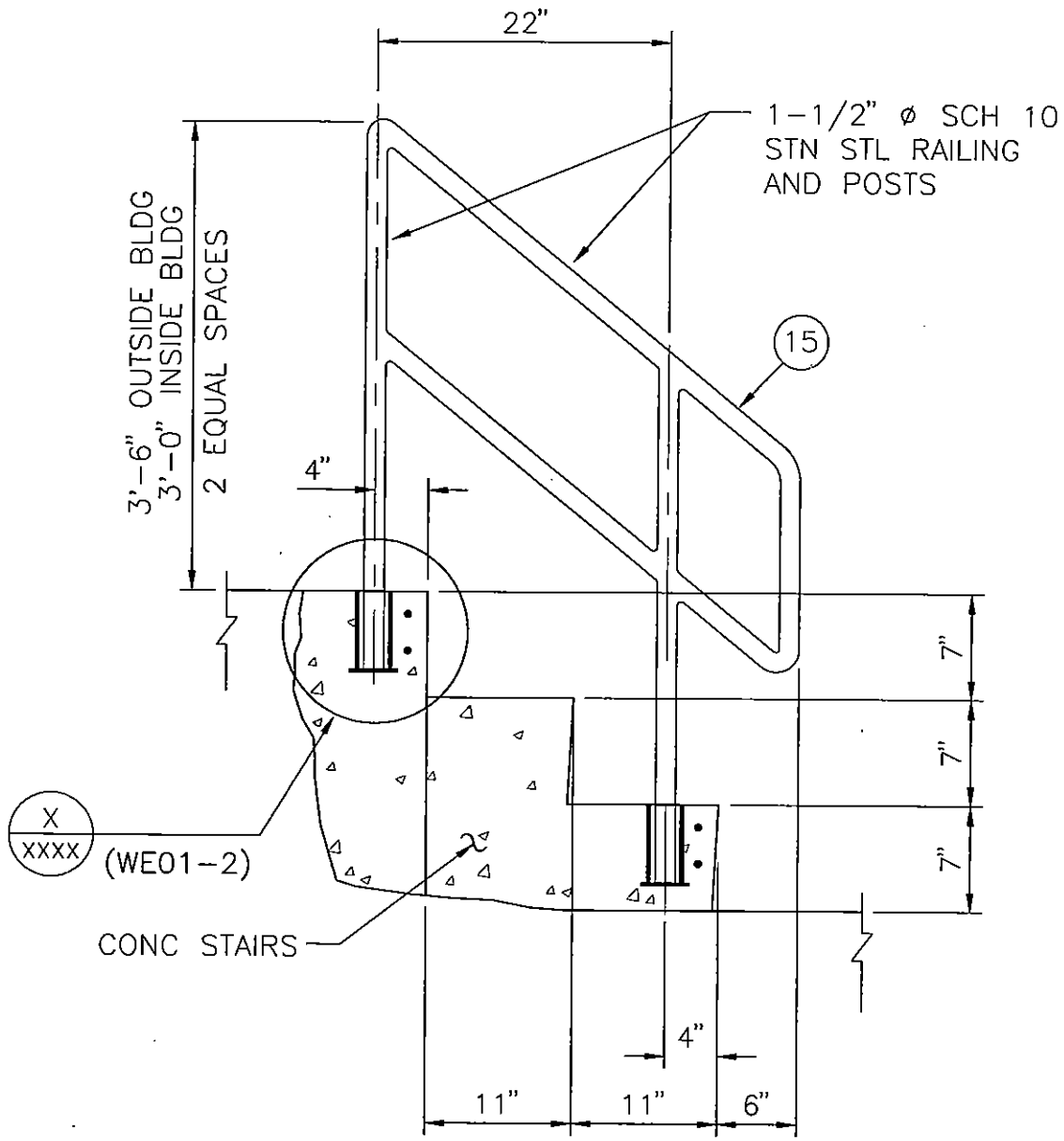

HANDRAIL AND STAIR DETAIL

NOT TO SCALE WE01-1 070803

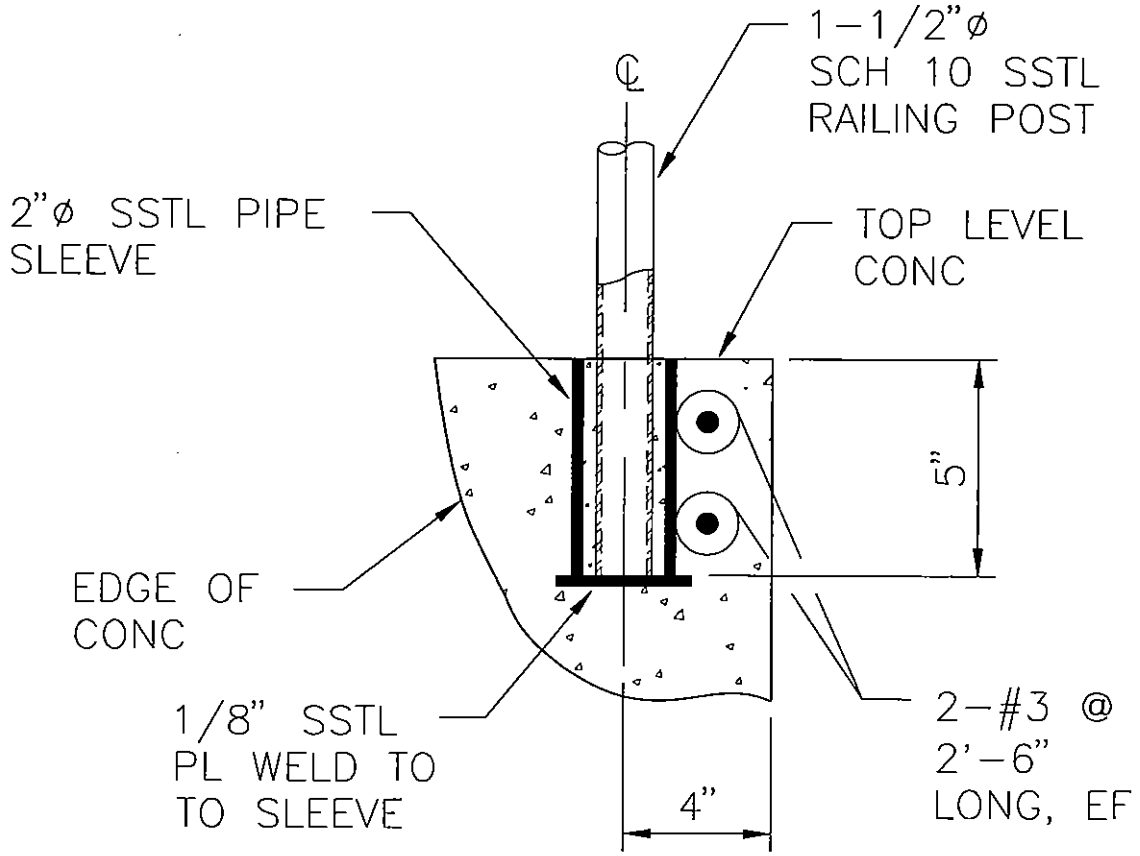

POST INSERT IN CONCRETE DETAIL

NOT TO SCALE WE01-2 070803

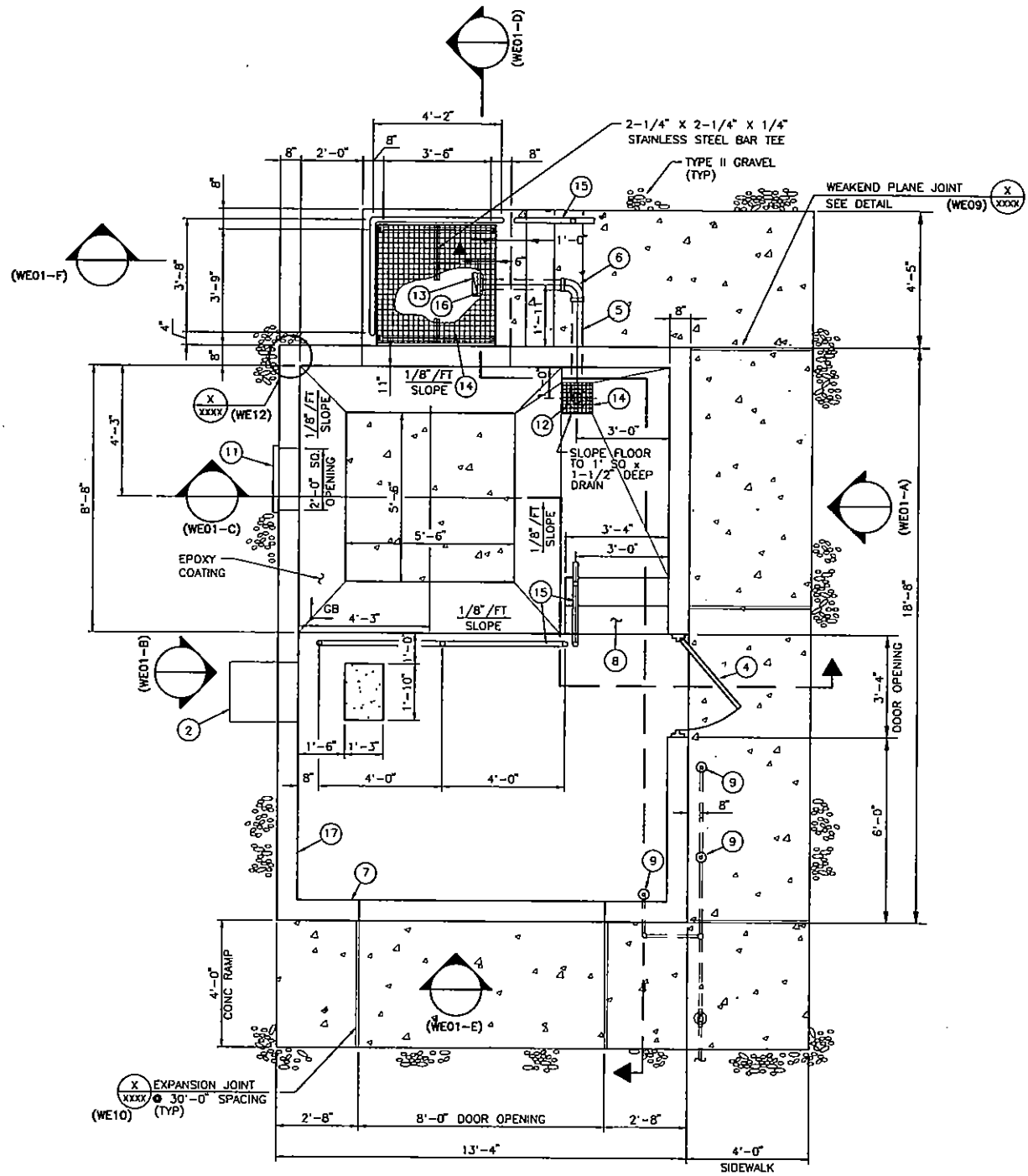

DISINFECTION BUILDING - FLOOR PLAN

SCALE: 3/8"=1'-0" WE01-3 070803

ITEM	DESCRIPTION
1	SPLIT FACED 8" x 8" x 16" PIGMENTED CMU WALLS
	CONTRACTOR TO SUBMIT COLOR SAMPLES TO MATCH EXISTING PERIMETER WALL
2	AIR CONDITIONER
3	INSULATED STEEL ROLLING SERVICE DOOR WITH WEATHER SEALS, AND MANUAL
	CHAIN OPERATOR
4	FLUSH STEEL DOOR WITH INSULATED HONEY-COMB CORE
5	4" PVC PIPE, SCH 80
6	4" PVC SCH 80 90° ELBOW
7	PAINT INTERIOR WHITE
8	CONC STAIRS, SEE DETAIL XX
9	2" SCH 80 PVC PIPE SLEEVE
10	ROOF VENT: AIRFOIL VENT ALUMINIUM CAP W/BIRDPROOF SCREEN
11	FAN EXHAUSTER ELECTRICALLY OPERATED AND CONNECTED TO THE FAN,
	2 FT X 2 FT FREE AREA LOUVERED VENT W/INSECT SCREEN, BLADE
	AND JAMB SEALS, FACTORY MTD 120V ELECTRIC OPERATOR.
12	4" FLOOR DRAIN, SEE DETAIL X ON DRAWING NO XX
13	4" PVC BUTTERFLY VALVE W/2" SQ OPERATING NUT, PVC VALVE DISC,
	VITON SEALS AND LINING BY HAYWARD OR APPVD EQUAL
14	2" THK x 2" x 2" MESH FRP GRATING
15	1-1/2" SCH 10 SSTL RAILING & POSTS, SEE DETAIL XX
16	4" PVC SCH 80 FLANGE
17	FILL ALL OPEN CELLS WITH VERMICULITE

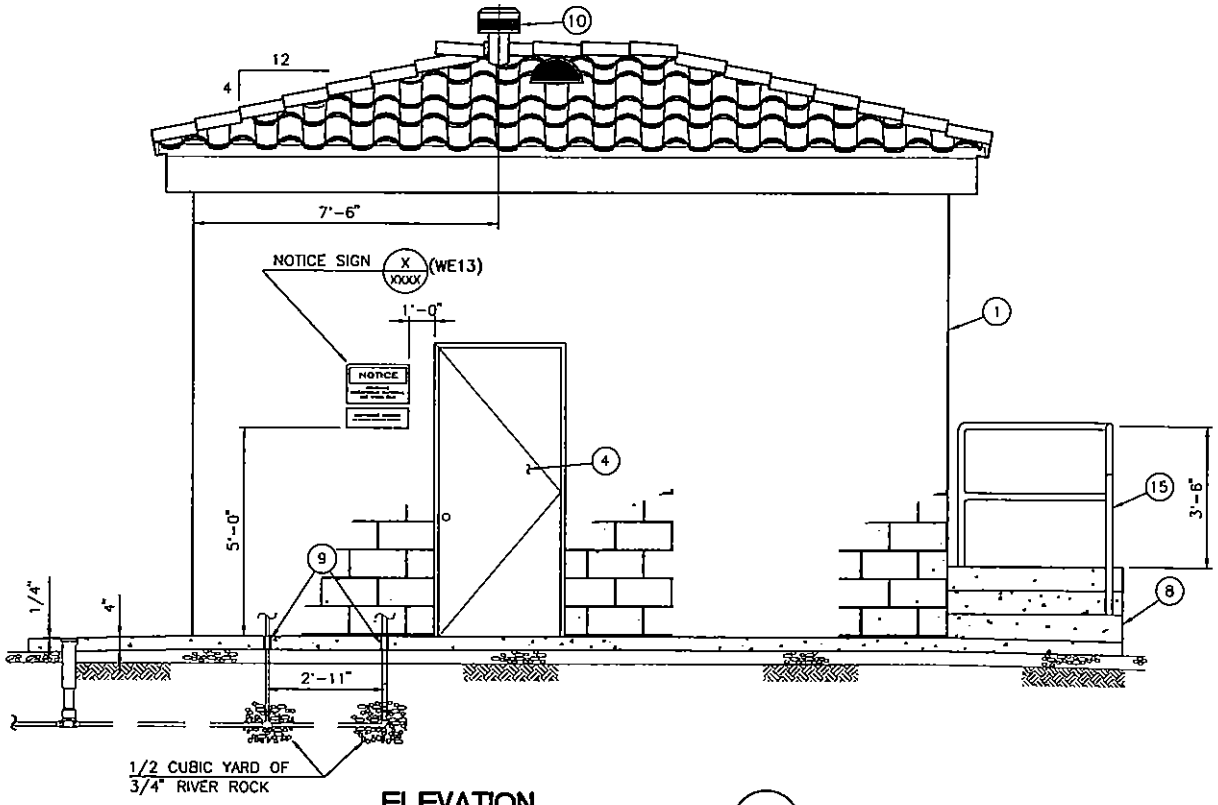

ELEVATION

SCALE: 3/8"=1'-0" WE01-A 070903

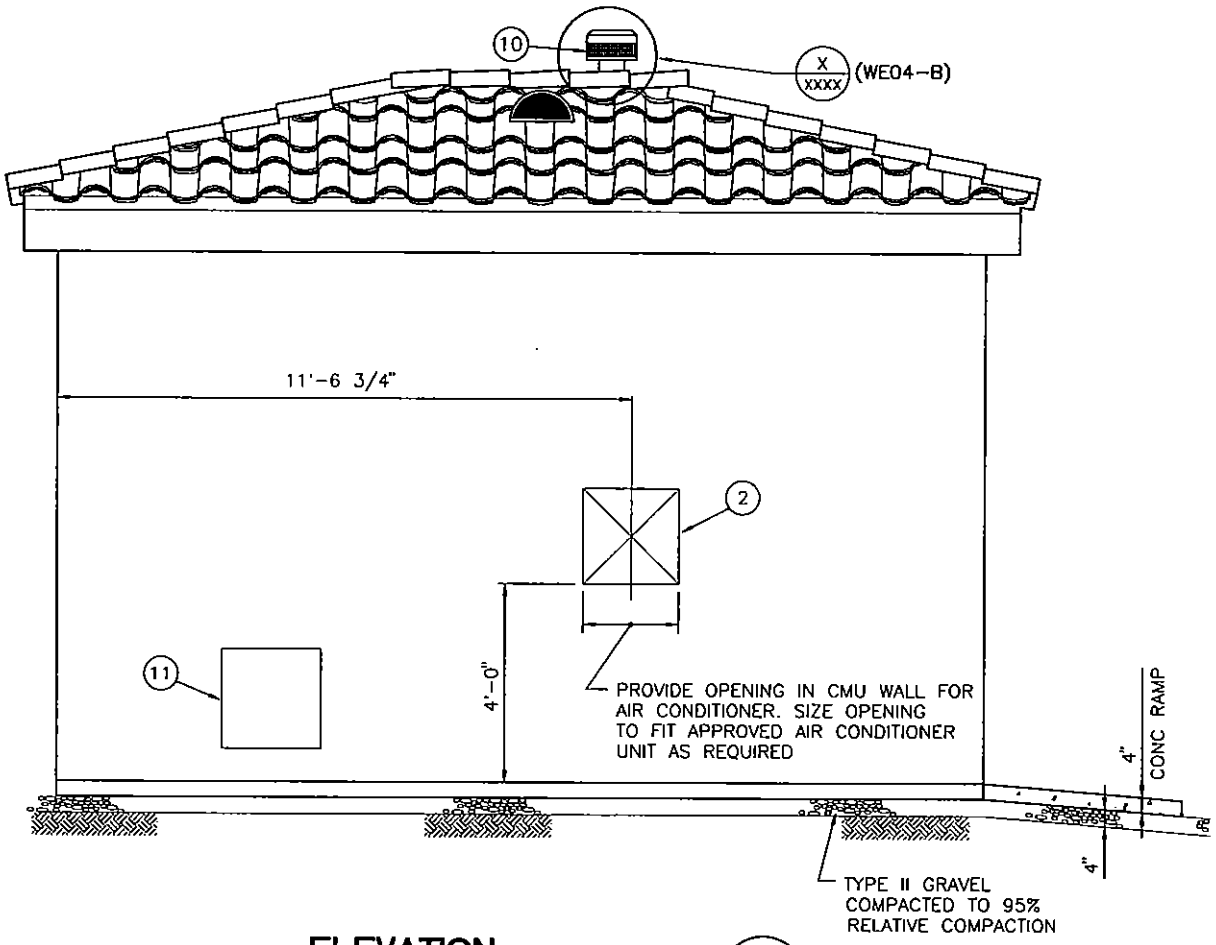

ELEVATION

SCALE: 3/8"=1'-0" WE01-B 070903

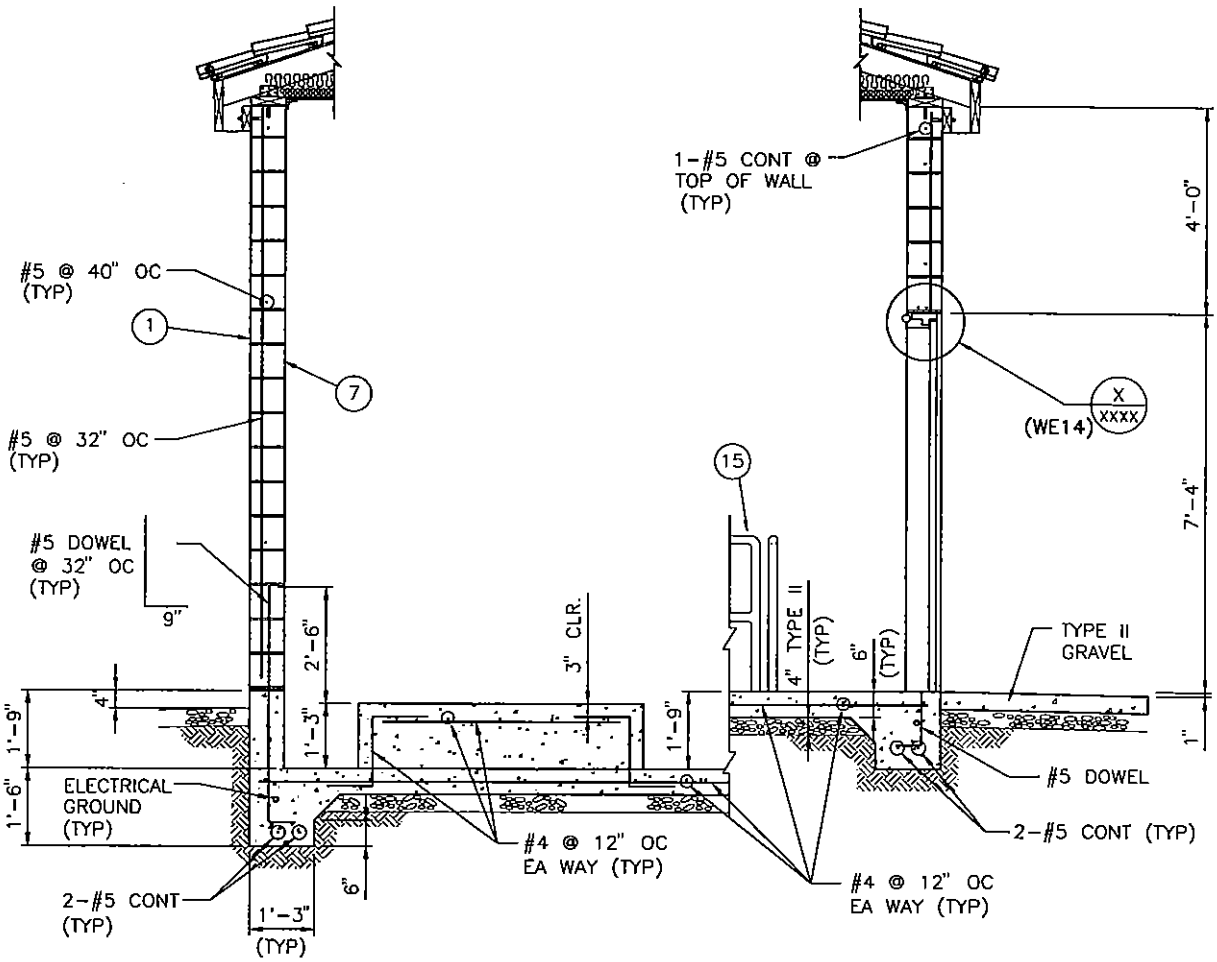

SECTION

SCALE: 3/8"=1'-0" WE01-C 070903

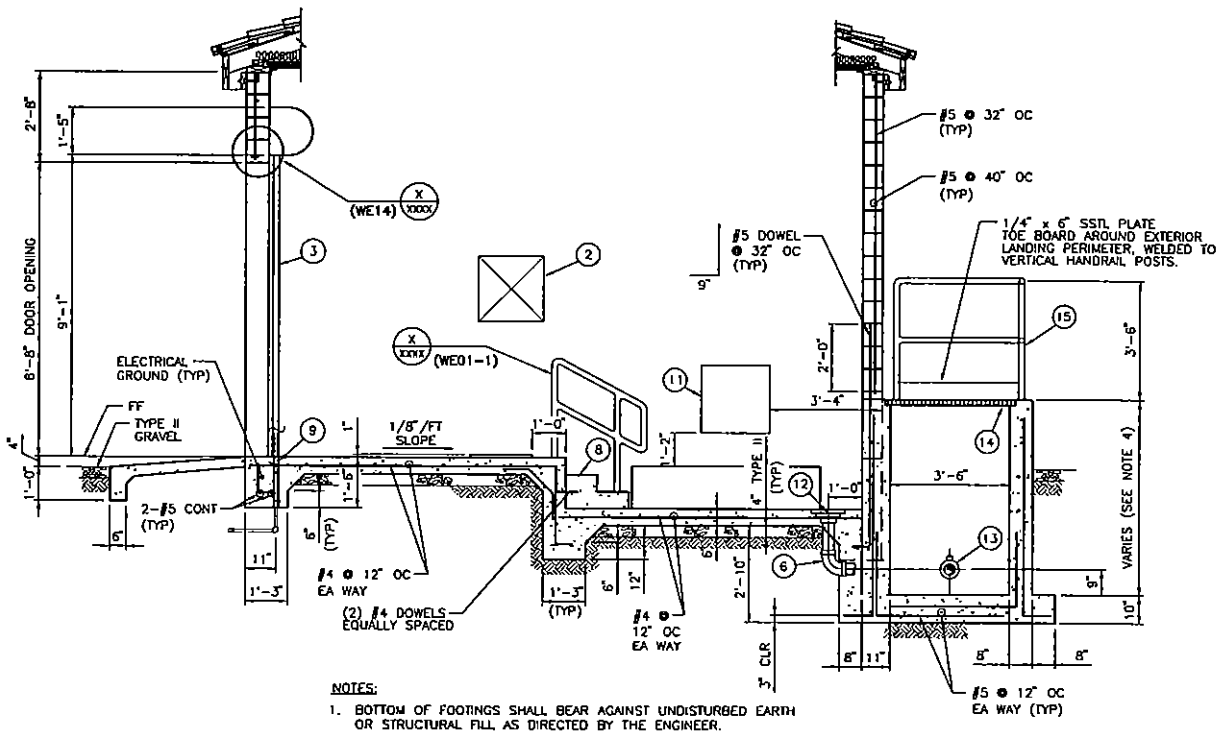

NOTES:

1. BOTTOM OF FOOTINGS SHALL BEAR AGAINST UNDISTURBED EARTH OR STRUCTURAL FILL AS DIRECTED BY THE ENGINEER.
2. FOR ROOF PLAN AND DETAILS SEE DRAWING NO XX.
3. UPPER FLOOR SLAB MAY BE POURED SEPERATE FROM THE CONTAINMENT AREA.
4. DIMENSION WILL VARY DEPENDING ON HEIGHT OF TANK.
5. CONTAINMENT AREA TO BE PLACED MONOLITHICALLY.

SECTION

SCALE: 3/8" = 1'-0" WE01-D 070903

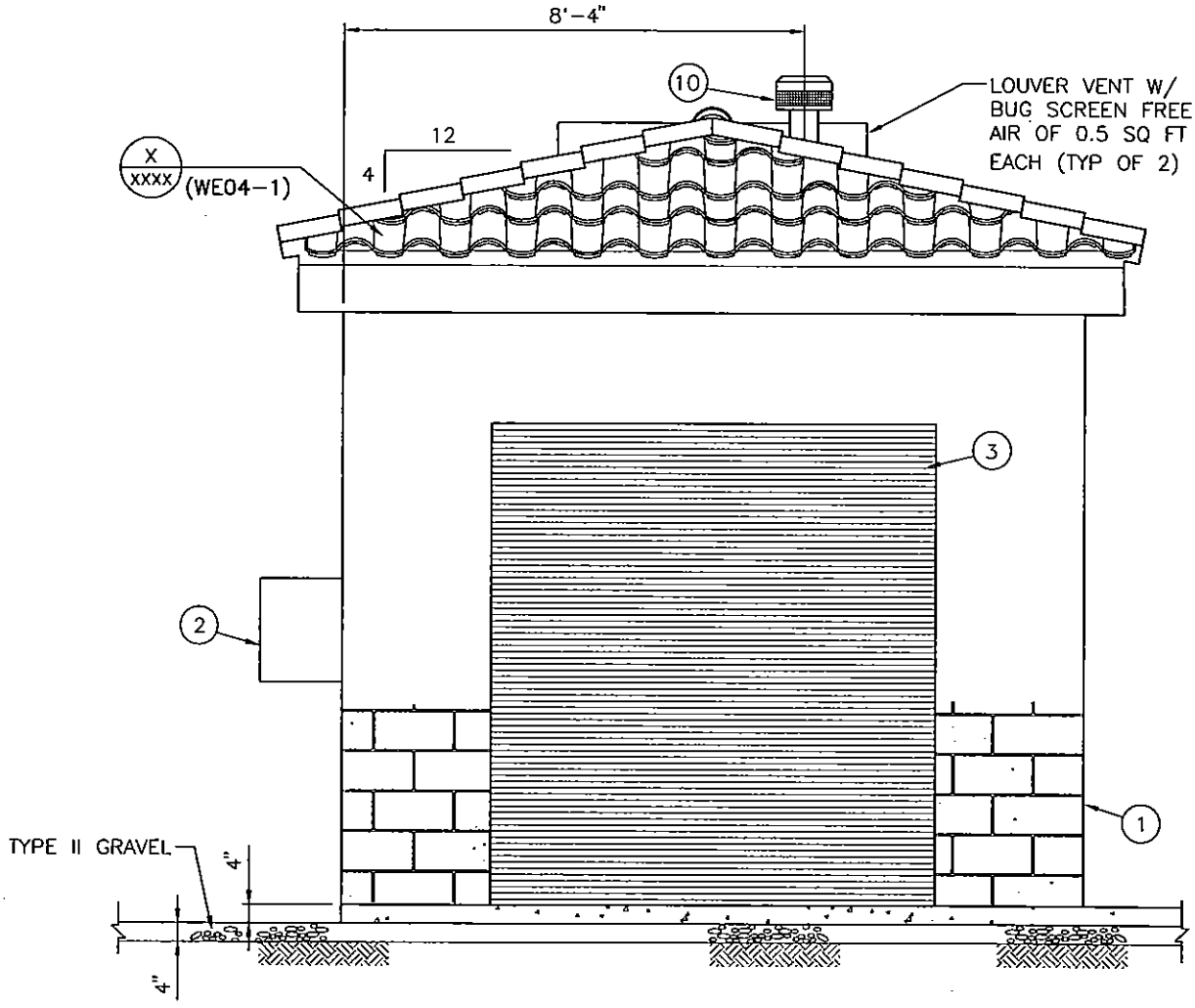

ELEVATION

SCALE: 3/8"=1'-0" WE01-E 070903

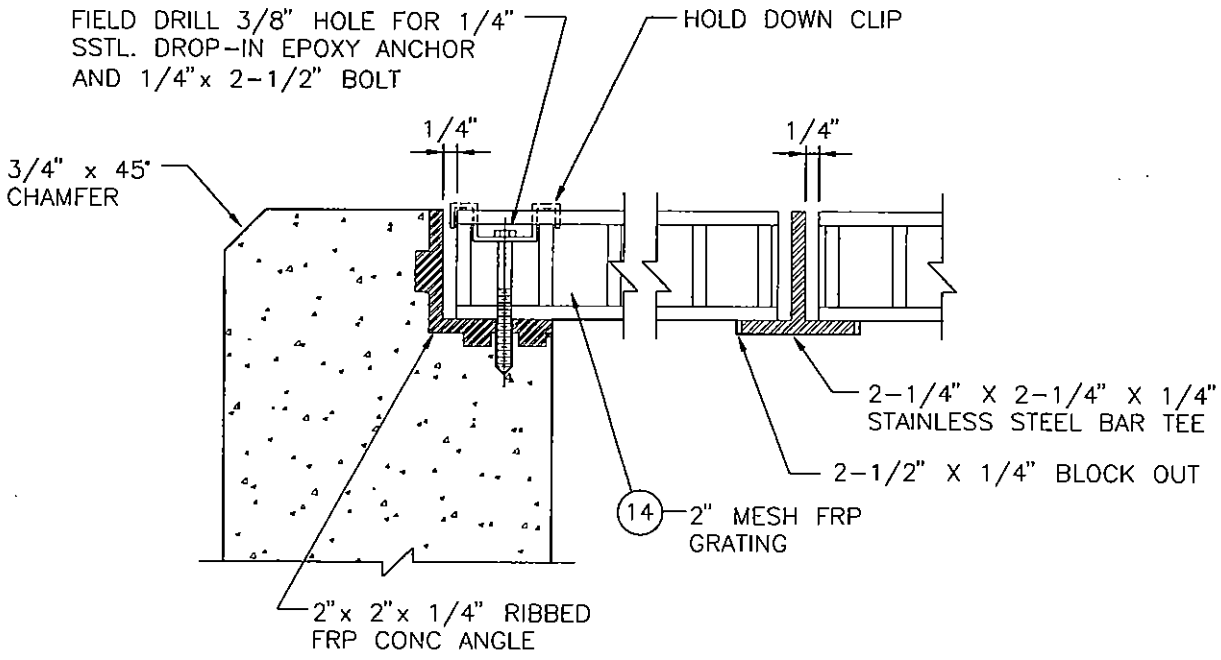

SECTION

NOT TO SCALE WE01-F 070903

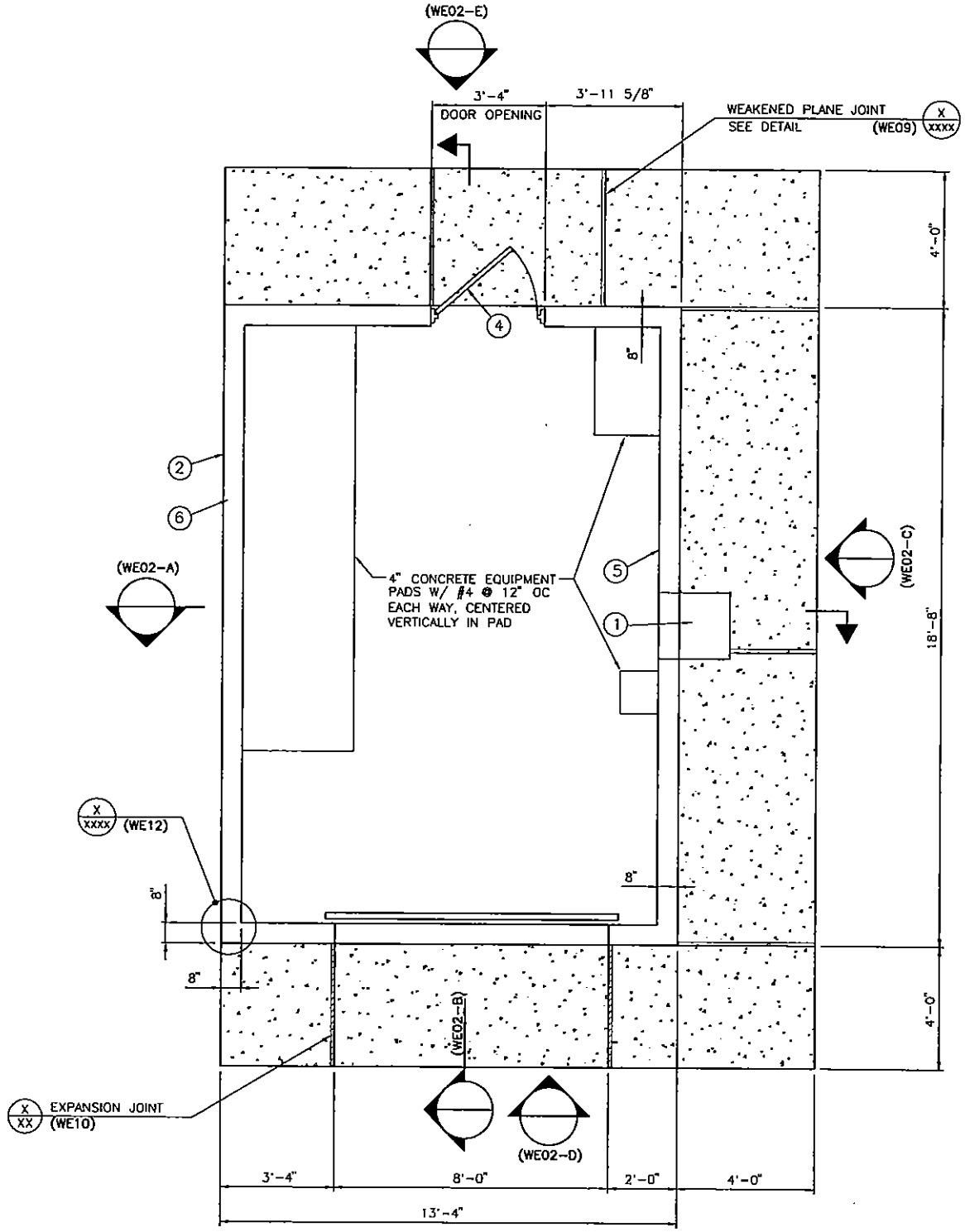

CONTROL BUILDING - FLOOR PLAN

SCALE : 3/8" = 1'-0" WE02-1 070903

ITEM	DESCRIPTION
1	AIR CONDITIONER / HEATER UNIT
2	SPLIT FACED 8"x 8"x 16" PIGMENTED CMU WALLS
3	ROLLING SERVICE DOOR, FOR DESCRIPTIONS SEE DWG NO XX
4	STEEL SERVICE DOOR, FOR DESCRIPTIONS SEE DWG NO XX
5	PAINT INTERIOR WHITE
6	FILL ALL OPEN CELLS WITH VERMICULITE

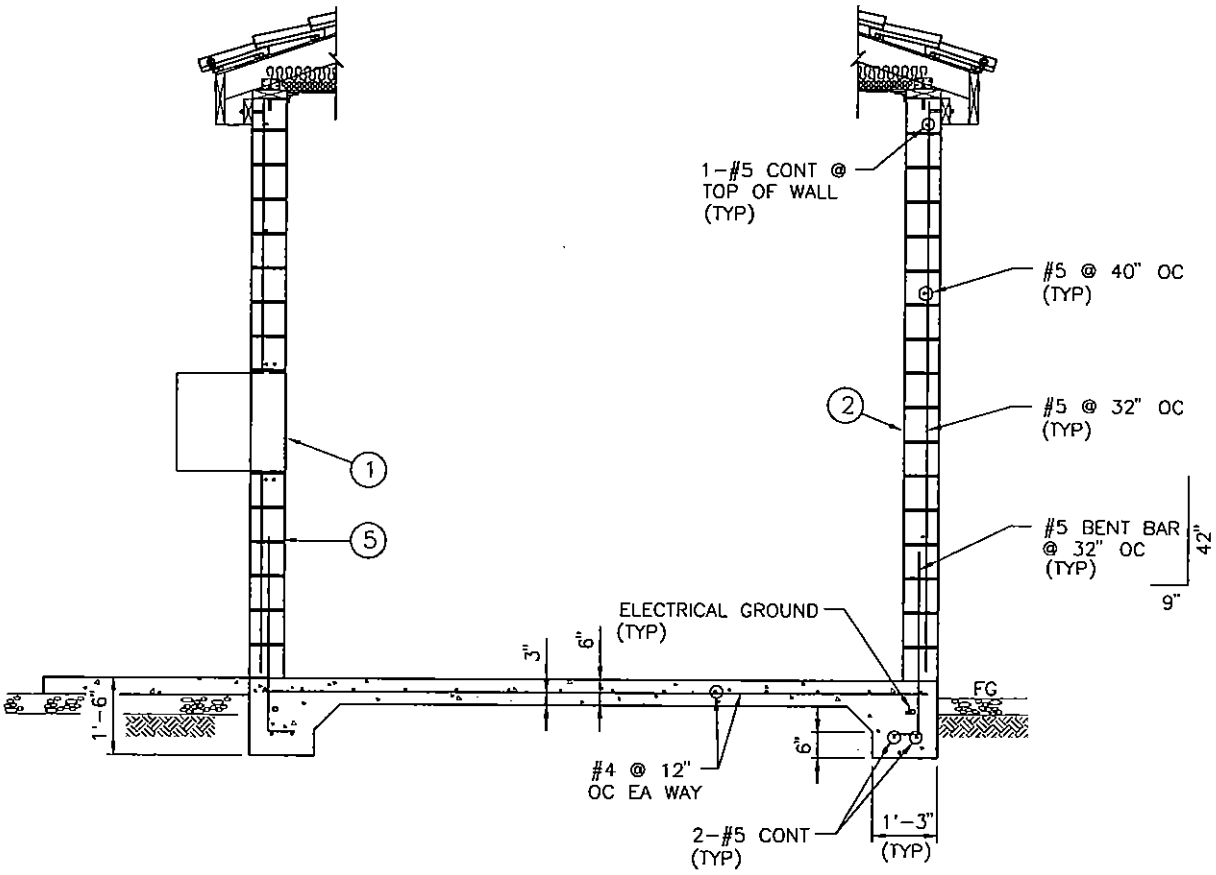

SECTION

SCALE : 3/8" = 1'-0" WE02-A 070903

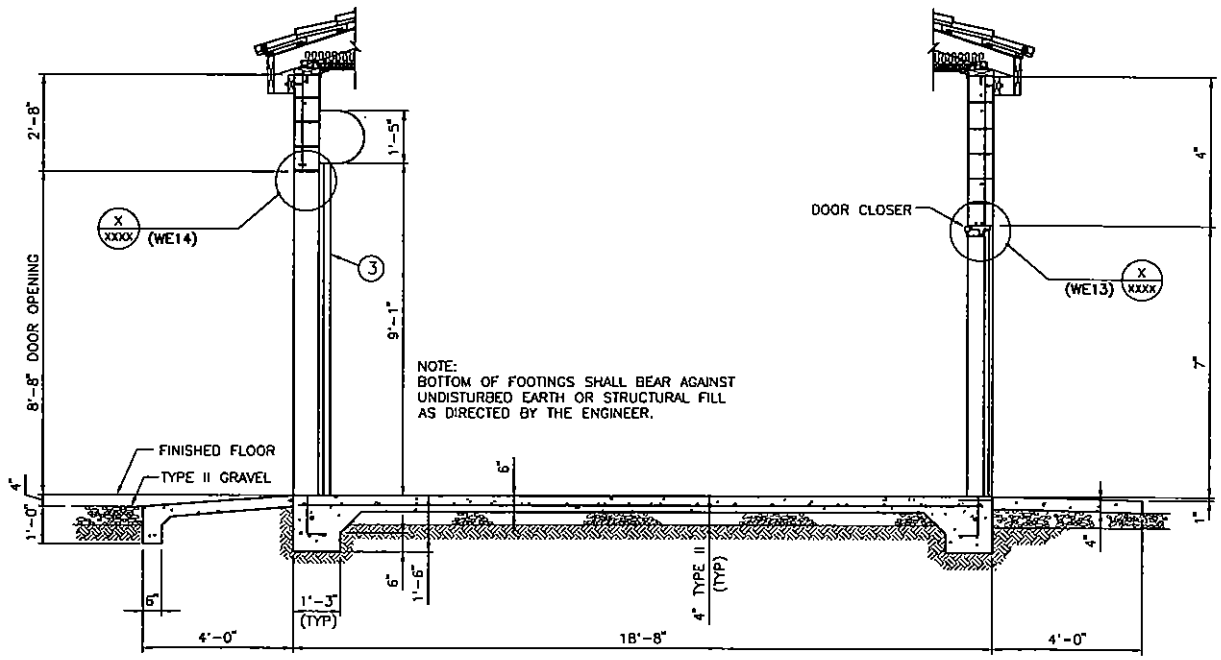

SECTION

SCALE : 3/8" = 1'-0" WE02-B 070903

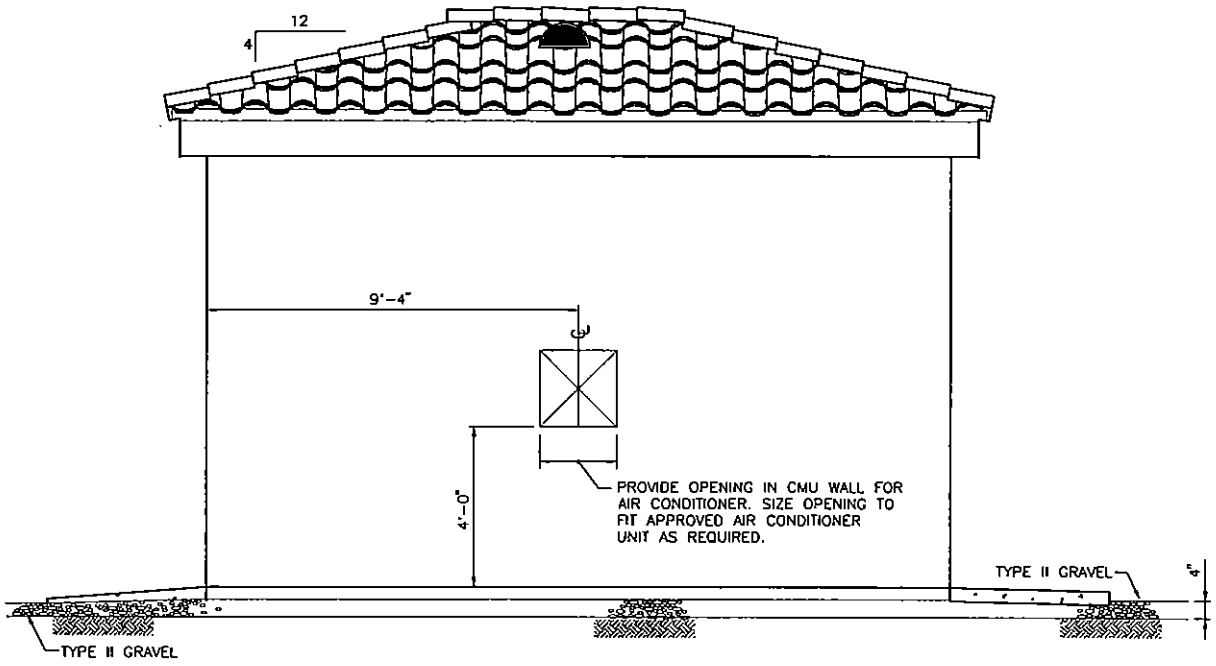

ELEVATION

SCALE : 3/8" = 1'-0" WE02-C 070903

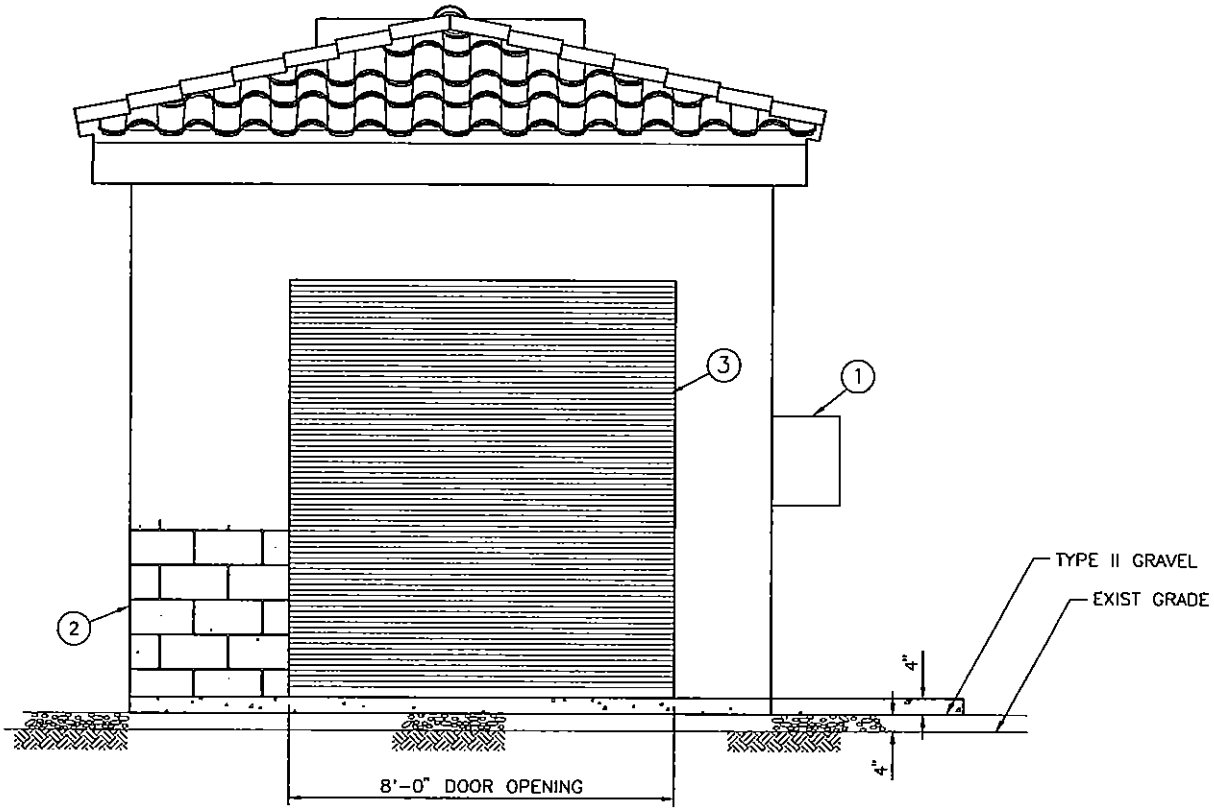

ELEVATION

SCALE : 3/8" = 1'-0" WE02-D 070903

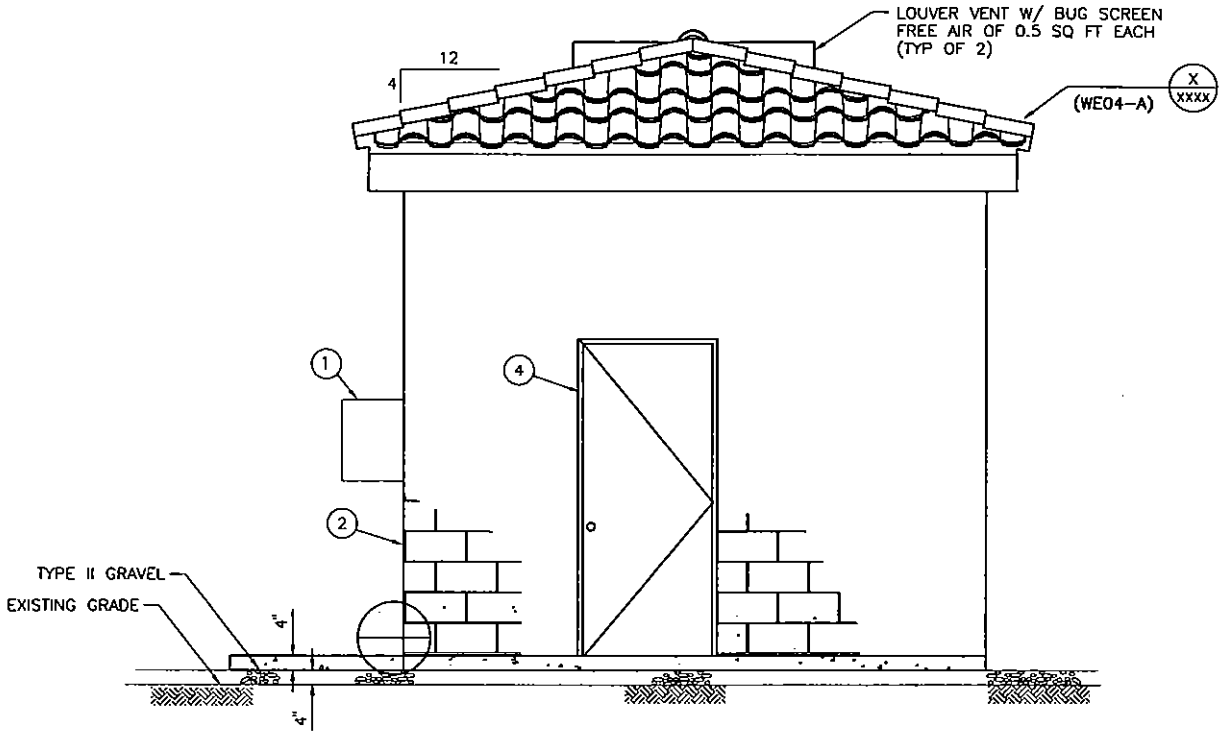

ELEVATION

SCALE : 3/8" = 1'-0" WE02-E 070903

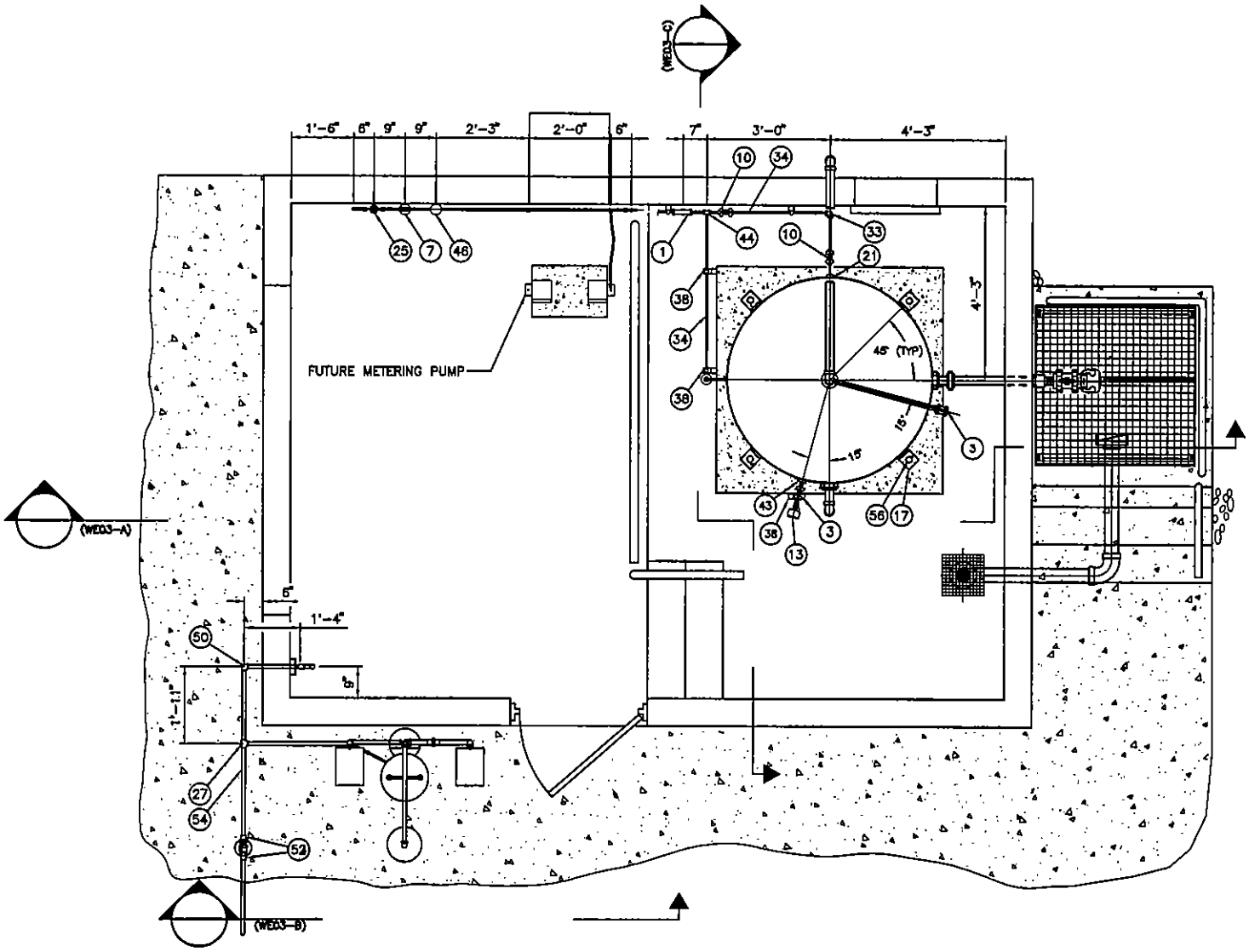

CHLORINE SOLUTION PIPING PLAN

SCALE: 1/2" = 1'-0" WE03-1 070903

ITEM	DESCRIPTION
1	1/2" PVC 'WYE' STRAINER, SOCKET ENDS, 1/32" PERFORATED PVC SCREEN
2	1 5/8" CHANNEL AND 2" CLAMP
3	1" PVC TRUE UNION BALL VALVE, WITH SEALS, SOCKET ENDS, AND
	SAFE BLOCK
4	1" PVC PIPE
5	1/2" PVC BALL CHECK VALVE WITH SEALS AND SOCKET ENDS
6	1/2"x1/4" PVC REDUCER BUSHING (SPGxFPT)
7	0-160 PSI PRESSURE GUAGE-OIL FILLED
8	2" FEMALE COUPLER x MALE NPT POLYPROPYLENE CAM QUICK
	DISCONNECT
9	1/2" CLEAR PVC PIPE AND ELBOW
10	1/2" PVC TRUE UNION BALL VALVE, WITH SEALS, SOCKET ENDS AND
	SAFE BLOCK
11	1/2" FLEXIBLE POLYETHYLENE TUBING
12	METERING PUMP
13	PRESSURE TRANSMITTER
14	1" ELECTRICAL PVC CONDUIT. SEE DETAIL X DRAWING NO XX
15	SODIUM HYPOCHLORITE TANK W/COVER
16	2" PVC TANK ADAPTER
17	TANK TIE DOWN LUG, SUPPLIED W/STORAGE TANK
18	2" PVC UNION
19	2" PVC BALL VALVE WITH VITON , SOCKET ENDS, SAFE BLOCK
20	0.5 LITER CALIBRATION COLUMN
21	1/2" PVC TANK ADAPTER
22	1/2" PVC UNION
23	1" PVC 90° ELBOW
24	1/4" PVC CHEMCOCK VALVE, HOSE x MPT
25	1/4" PVC BACK PRESSURE VALVE, NPT
26	2" PVC PIPE
27	1"x1"x1" BRONZE TEE, THREADED ENDS
28	1/2"x1/2"x1/2" PVC TEE, SOCKET ENDS
29	1/4" PVC NIPPLE (MPTxMPT)
30	2" PVC NIPPLE (MPTxMPT)
31	2" PVC COUPLING (FPTxFPT)
32	2" PVC 90° ELBOW
33	1/2" PVC 90° ELBOW
34	1/2" PVC PIPE
35	COMBINATION EYEWASH AND SHOWER ASSEMBLY
36	3/8" FLEXIBLE BLACK POLYETHYLENE TUBING (TO DIFFUSER ASSEMBLY)
37	1/2" NPT x 3/8" TUBING PVC ADAPTOR
38	1 5/8" CHANNEL, 1/2" CLAMP W/L BRACKET
39	FOR CONTINUATION SEE ELECTRICAL DRAWING NO XX
40	1 5/8" CHANNEL, 1/2" CLAMP
41	1/2" NPT x 1/2" TUBING PVC ADAPTOR
42	1/4" x 1/4" PVC GUAGE GUARD, FEMALE NPT
43	1" PVC TANK ADAPTOR
44	1/2" x 1/2" x 1/2" PVC TEE, SOCKET ENDS
45	2" PVC CAP W/10-1/8" HOLES EVENLY SPACED
46	1/2" PVC PULSATION DAMPNER (NPT)
47	CAST IRON SERVICE BOX, ADJUSTABLE
48	1 5/8" CHANNEL, 3/4" CLAMP
49	3/4" BRASS HOSE BIB W/VACUUM BREAKER
50	1" BRONZE 90° ELBOW
51	SAND BAG BOTH OPENINGS OF THE CAST IRON SERVICE BOX
52	1" TEE HEAD, CURB STOP
53	1" x 3/4" NPT BRONZE ADAPTOR
54	1" COPPER WATER SUPPLY
55	1 5/8" CHANNEL, 1/2" CLAMP
56	RESIN CAPSULE ANCHOR & 5/8"ø SSTL STUD ASSEMBLY
57	1" x 1" x 3/4" BRONZE REDUCING TEE
58	1 1/4" BRONZE ELL
59	1" x 1 1/4" BRONZE REDUCER W/1 1/4"ø COPPER WATER SUPPLY
60	1/2" NPT x 1/2" TUBING PVC ADAPTOR
61	2" EXTENSION SPLIT PIPE CLAMP W/ 3/8" MACHINE THREADED ROD AND CEILING FLANGE
	ROD THREADED
62	2" PVC SCHEDULE 80 SLEEVE

WE03-2 012401

NOTES

1. MOUNT FRP CHANNELS WITH 3/8"-16 NC 316 STAINLESS STEEL EPOXY ANCHOR BOLTS.

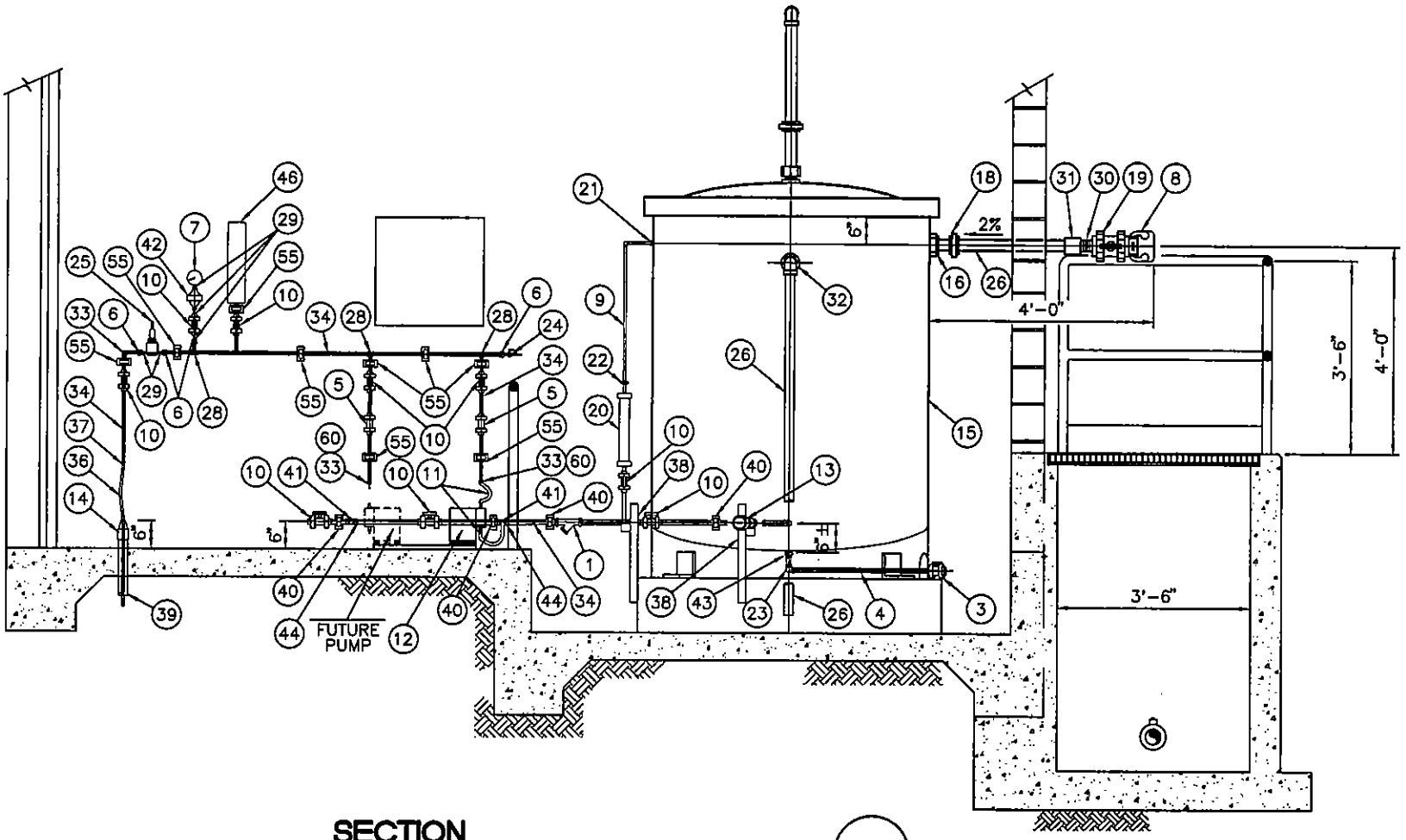

SECTION

SCALE: 1/2" = 1'-0" WE03-A 070903

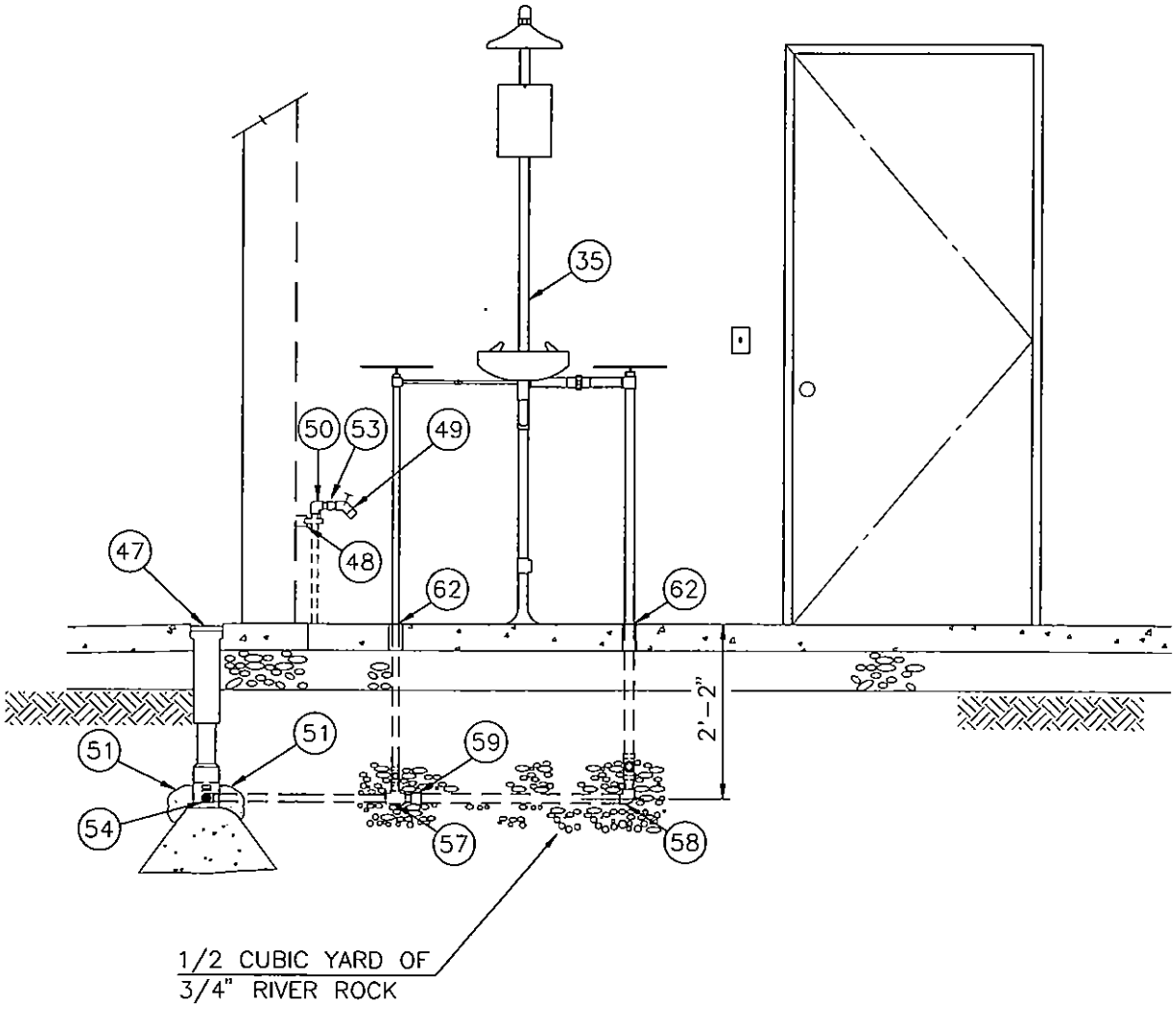

SECTION

SCALE: 1/2" = 1'-0" WE03-B 070903

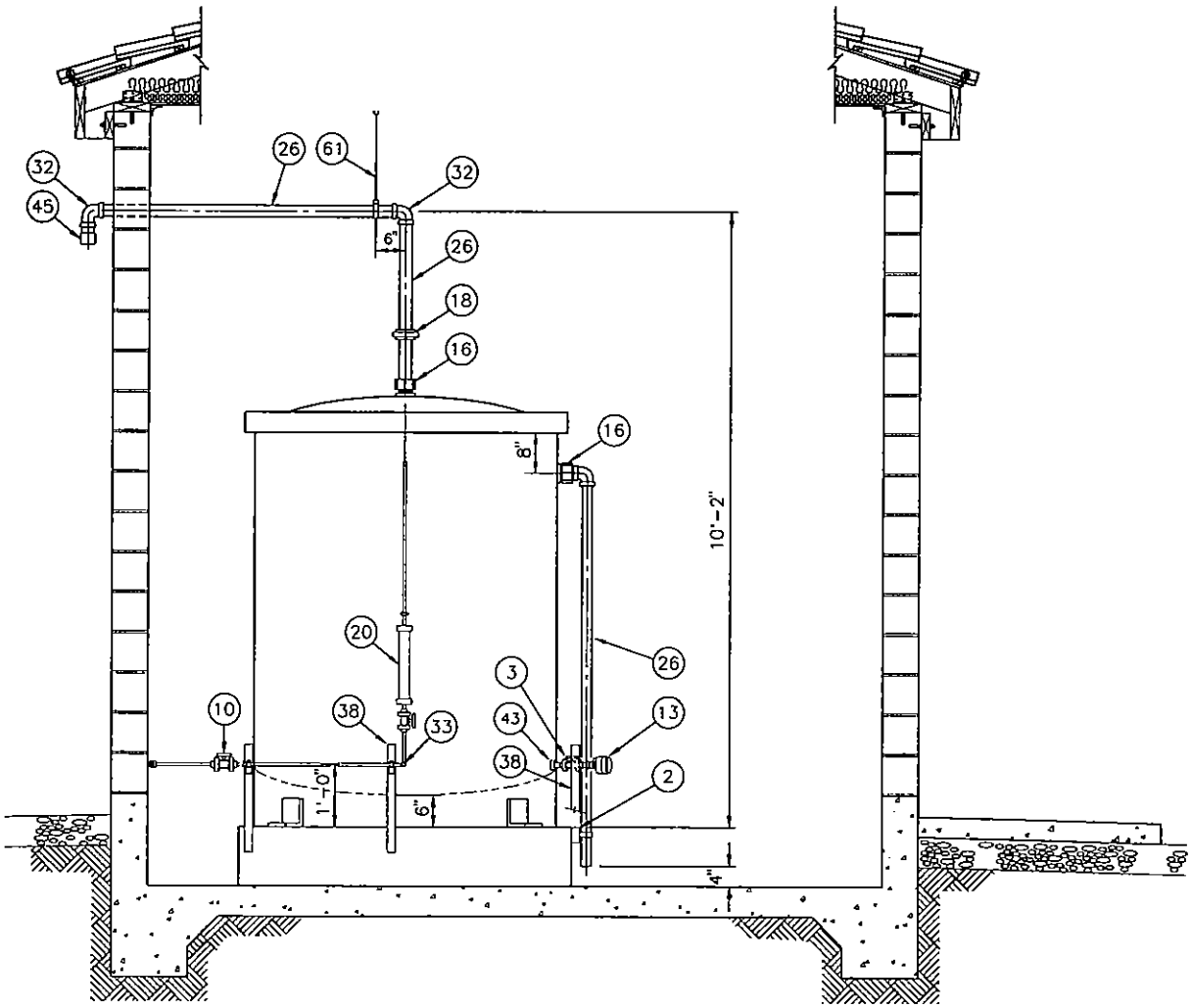

SECTION

SCALE: 1/2" = 1'-0" WE03-C 070903

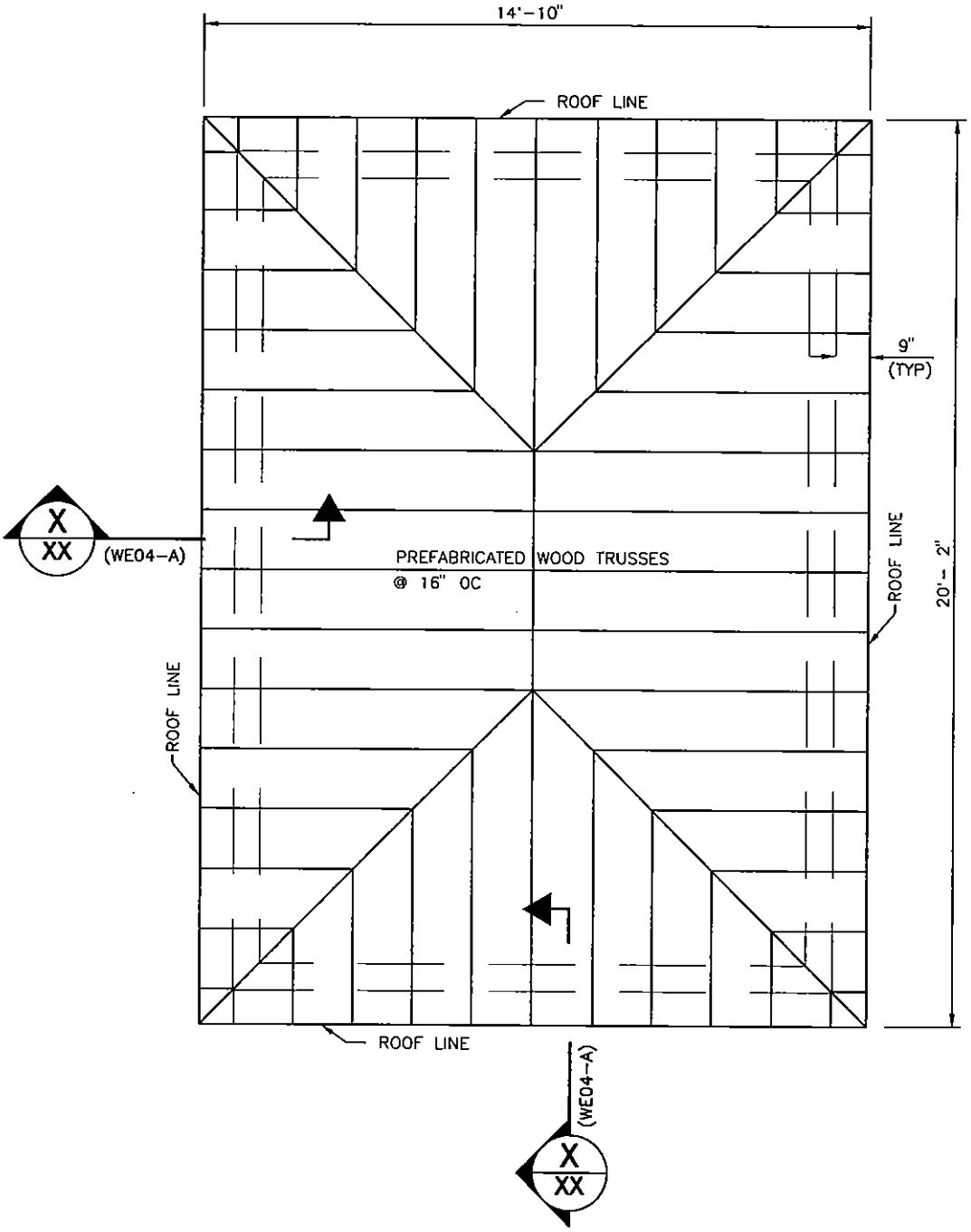

CONTROL AND DISINFECTION BUILDING - ROOF PLAN

NOT TO SCALE

WE04-1 070903

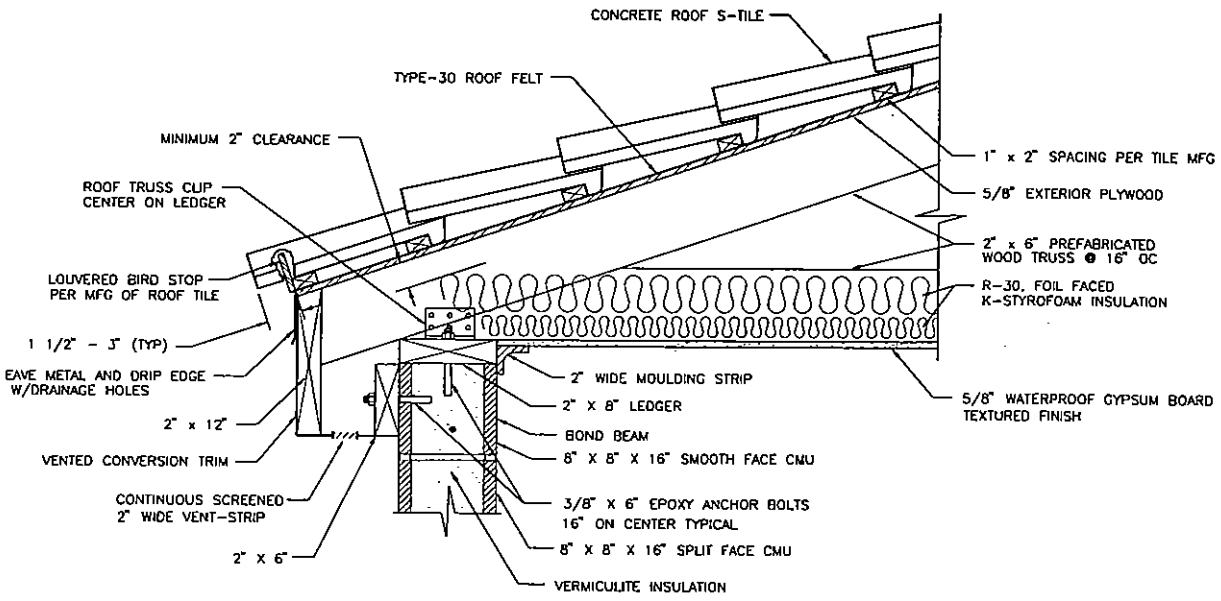

SECTION

NOT TO SCALE WE04-A 070903

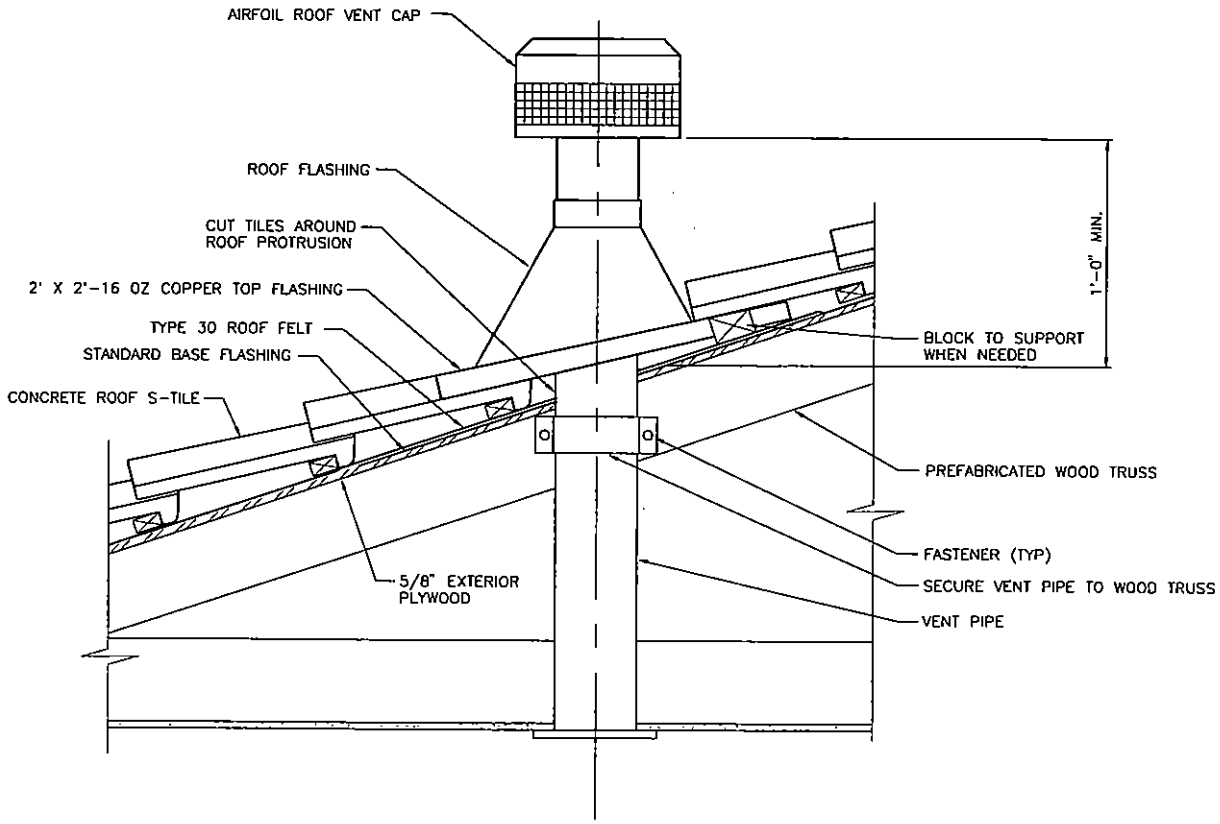

ROOF VENT FLASHING DETAIL

NOT TO SCALE

WE04-8 070903

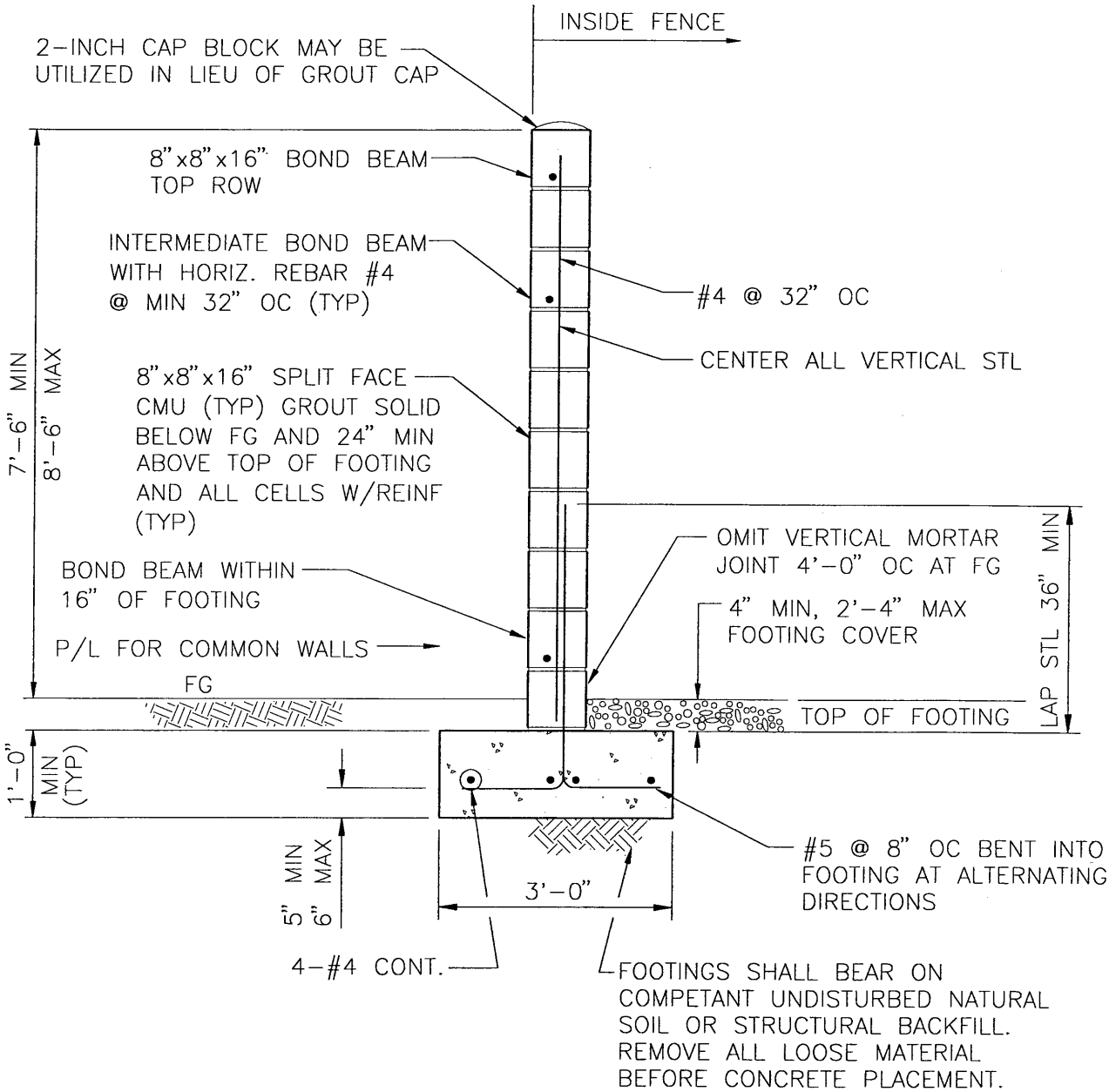

BLOCK WALL

NOT TO SCALE WE05-1 050704

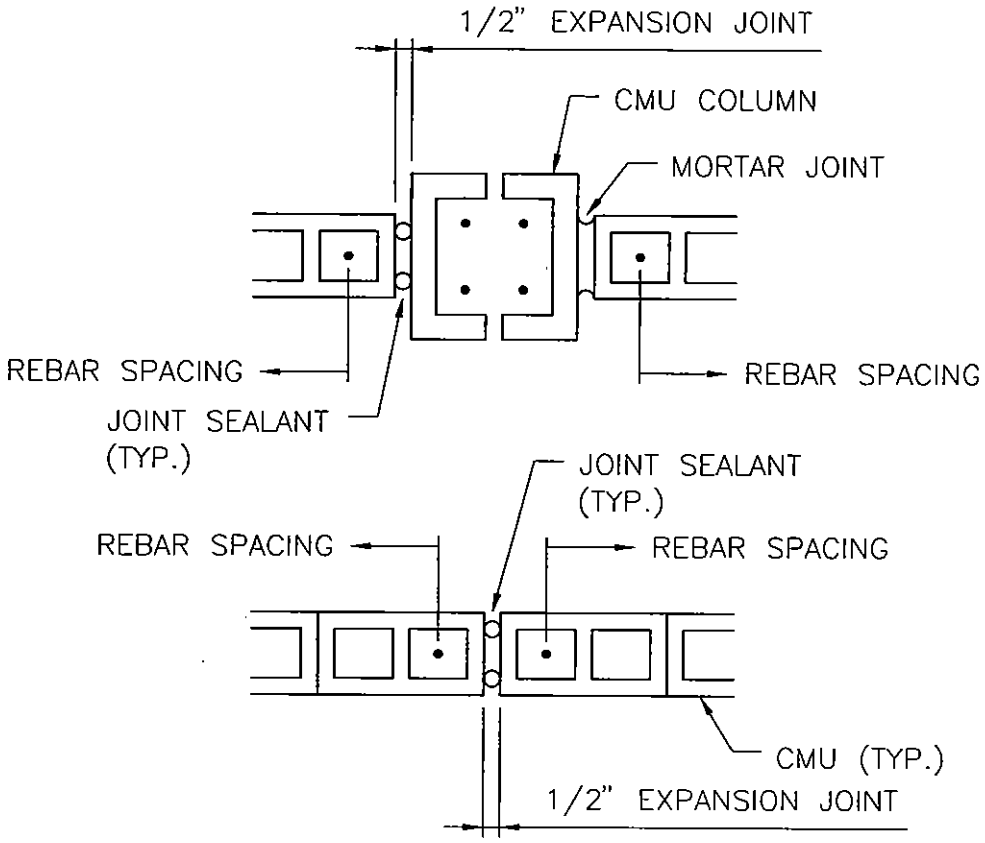

NOTES:

1. COLUMNS THAT CONNECT WALL SECTIONS SHALL HAVE AN EXPANSION JOINT ON ONE SIDE AND MORTAR JOINT ON THE OTHER SIDE.
2. WALL SECTIONS WITHOUT COLUMNS SHALL HAVE EXPANSION JOINTS MADE AT INTERVALS NO GREATER THAN 48 FEET.
3. EXPANSION JOINTS SHALL BE FILLED WITH FLEXIBLE SEALANT. COLOR TO MATCH TO GROUT COLOR.

BLOCK WALL EXPANSION JOINT

NOT TO SCALE WE05-2 071803

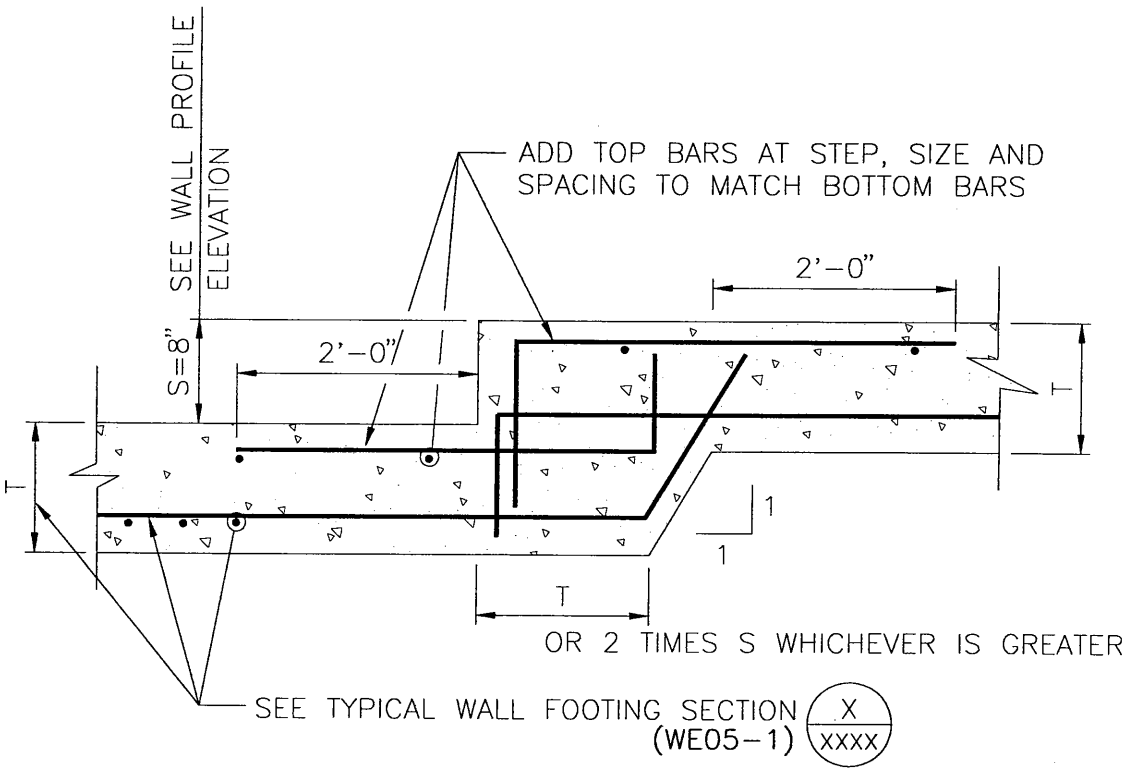

TYPICAL FOOTING AT STEP

NOT TO SCALE WE05-3 050704

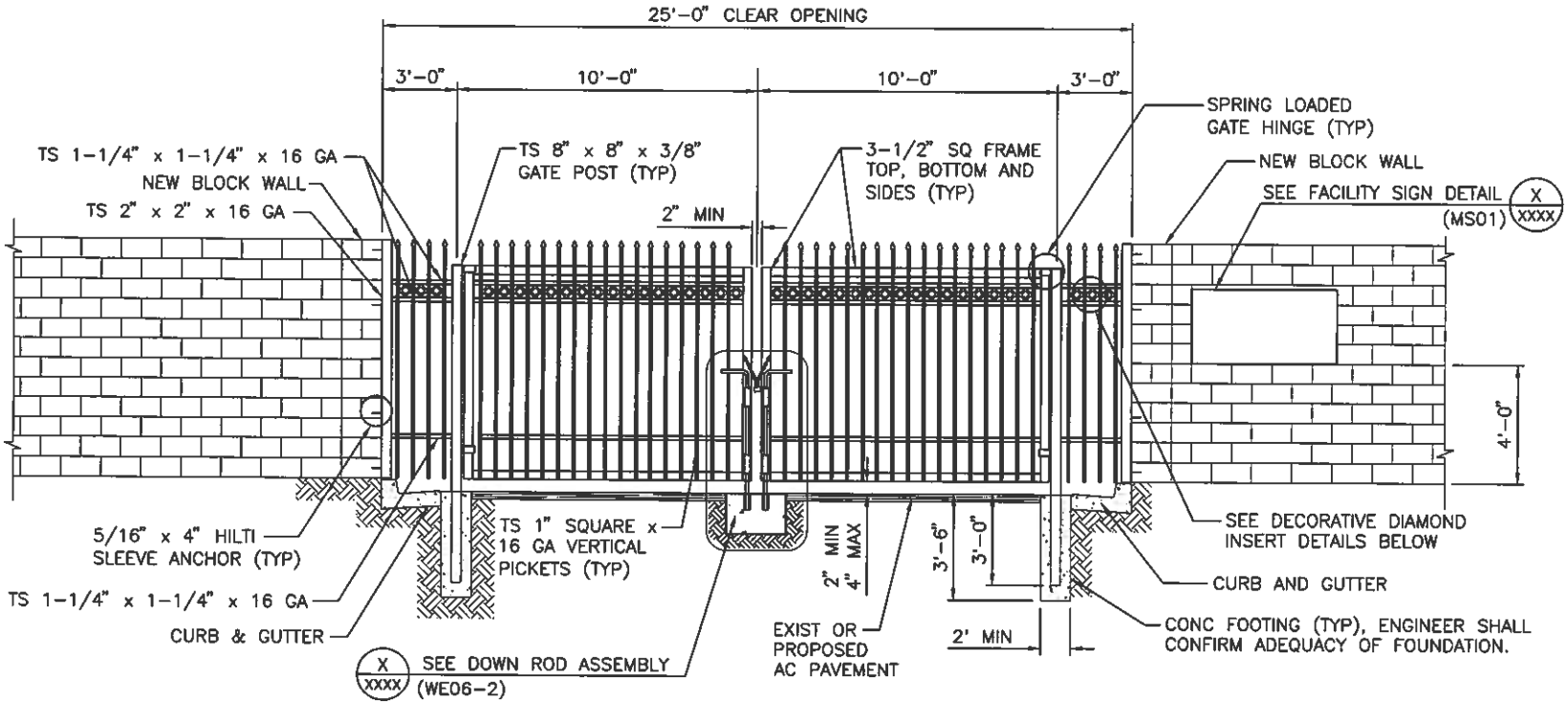

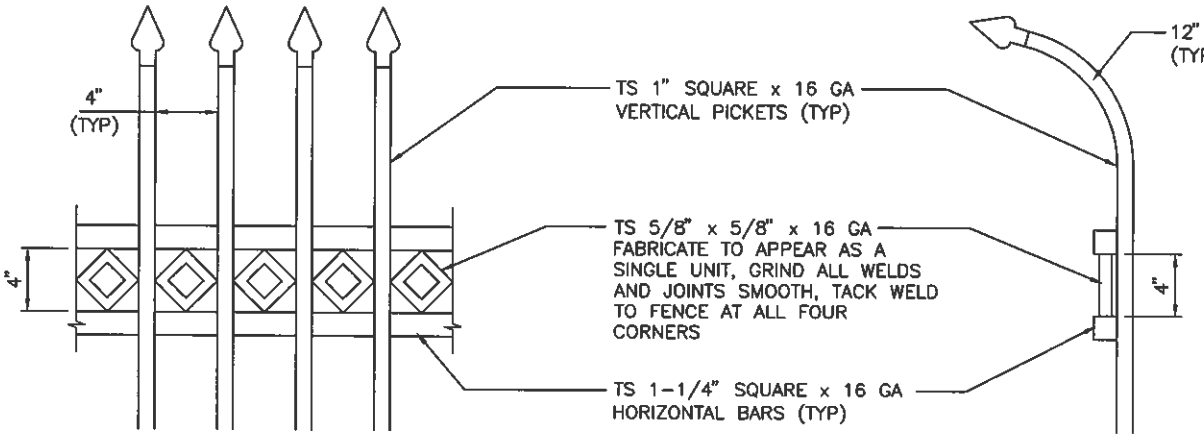

DECORATIVE DIAMOND INSERT
FRONT VIEW

DECORATIVE DIAMOND INSERT
SIDE VIEW

SWING GATE DETAIL

NOT TO SCALE WE06-1 110309

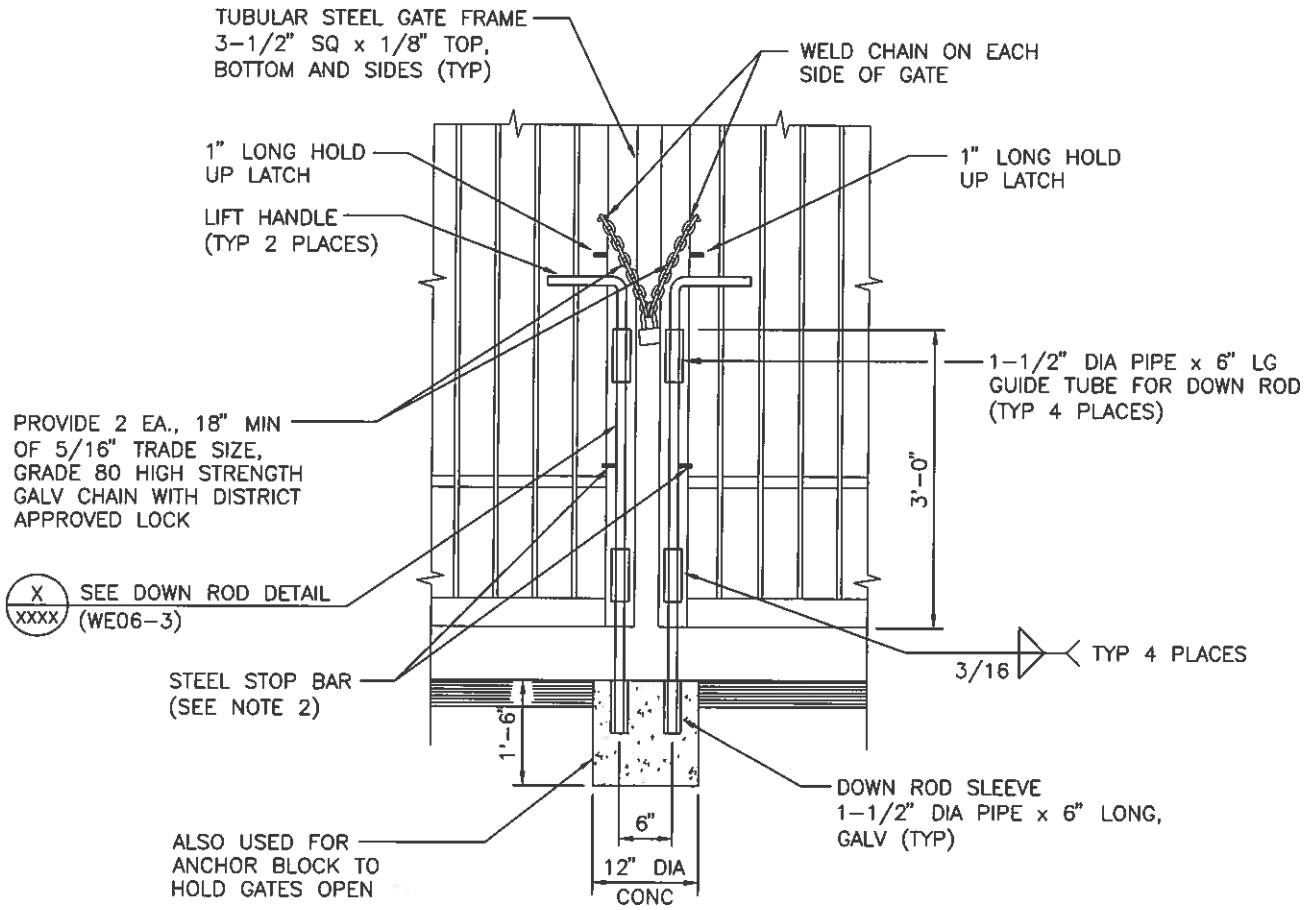

NOTES:

1. LIFT HANDLES AND DOWN RODS ARE TO BE MOUNTED ON THE EXTERIOR OF GATE (TYP).
2. WELD STEEL STOP BAR TO DOWN RODS AS REQUIRED TO PREVENT FULL REMOVAL

DOWN ROD ASSEMBLY

NOT TO SCALE WE06-2 110309

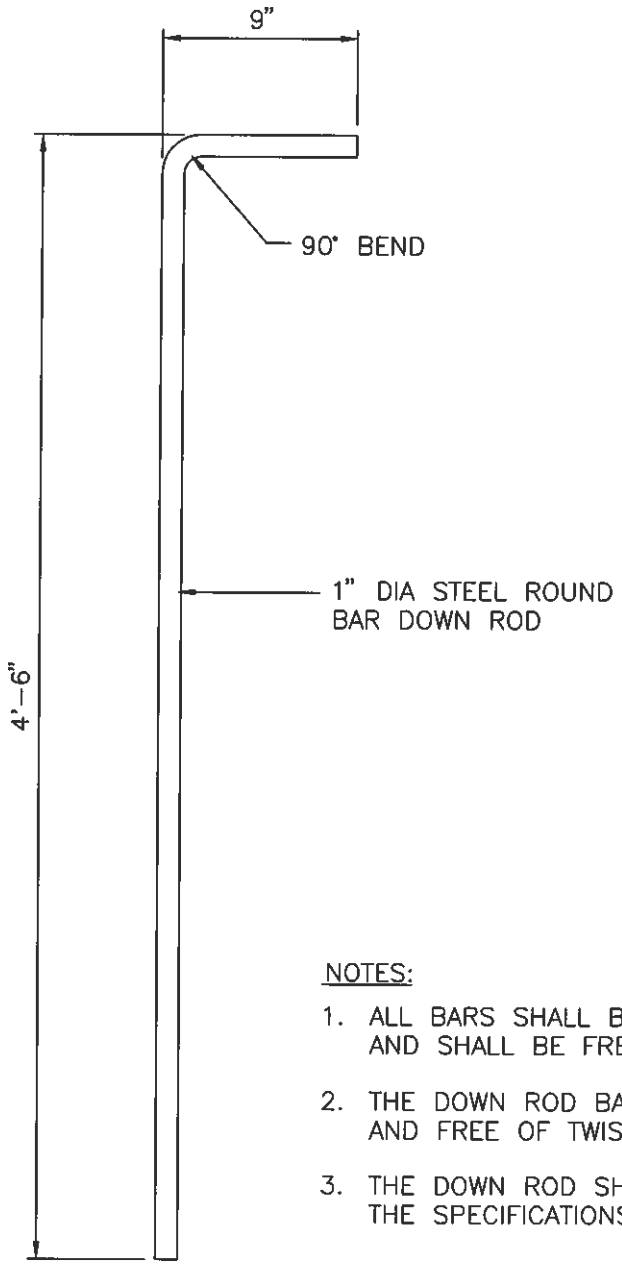

NOTES:

1. ALL BARS SHALL BE GROUND SMOOTH AND SHALL BE FREE OF BURRS.
2. THE DOWN ROD BAR SHALL BE STRAIGHT AND FREE OF TWISTS.
3. THE DOWN ROD SHALL BE PAINTED PER THE SPECIFICATIONS.

DOWN ROD DETAIL

NOT TO SCALE WE06-3 110309

TUBE STEEL FENCE NOTES: WE06-4 110309

1. GRIND ALL WELDS SMOOTH.
2. PICKETS AND POSTS SHALL REMAIN VERTICAL WHEN INSTALLED ON SLOPING GROUND.
3. HORIZONTAL BARS SHALL BE LEVEL WITH THE FINISHED GRADE BELOW PANEL SECTION.
4. VERIFY ALL DIMENSIONS IN FIELD PRIOR TO FABRICATION.
5. CONTRACTOR SHALL VERIFY LOCATIONS OF ALL UNDERGROUND UTILITIES AROUND FENCE AND SHALL NOTIFY THE ENGINEER IMMEDIATELY IF A CONFLICT ARISES.

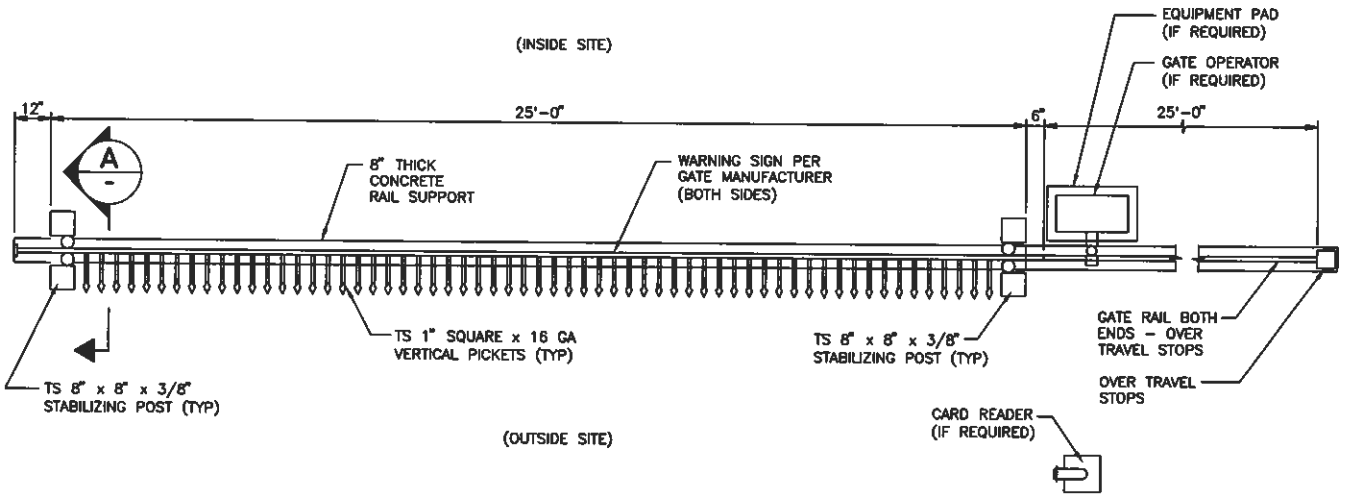

NOTES:

1. INSTALLATION OF GATE SHALL BE IN ACCORDANCE WITH MANUFACTURER'S RECOMMENDATIONS.
2. INSTALL EQUIPMENT PAD TO ALLOW FOR ELECTRICAL OPERATOR CONDUITS IF REQUIRED. SIZE DETERMINED BY OPERATOR MANUFACTURER.

SLIDE GATE DETAIL

NOT TO SCALE WE06-5 110309

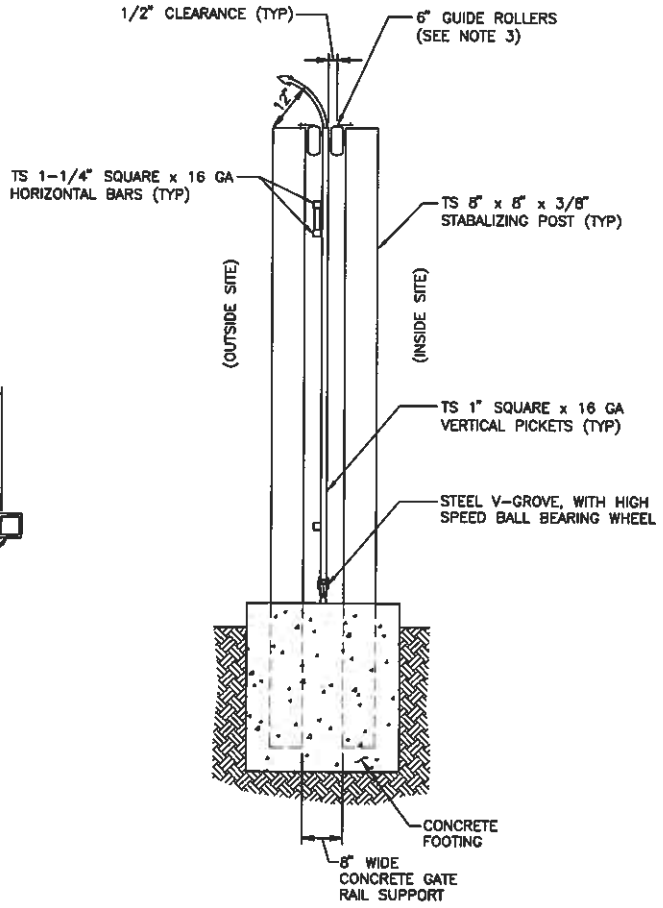

SECTION A

NOT TO SCALE

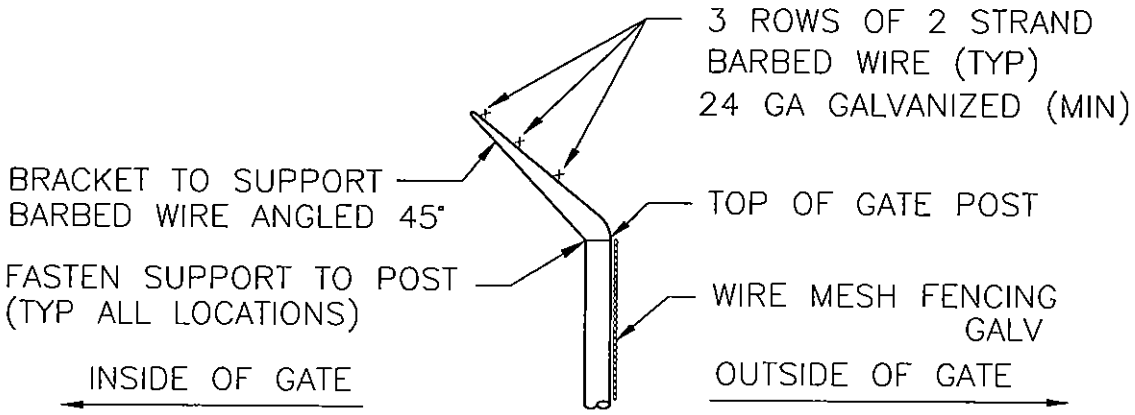

BARBED WIRE DETAIL

NOT TO SCALE

WE07 070903

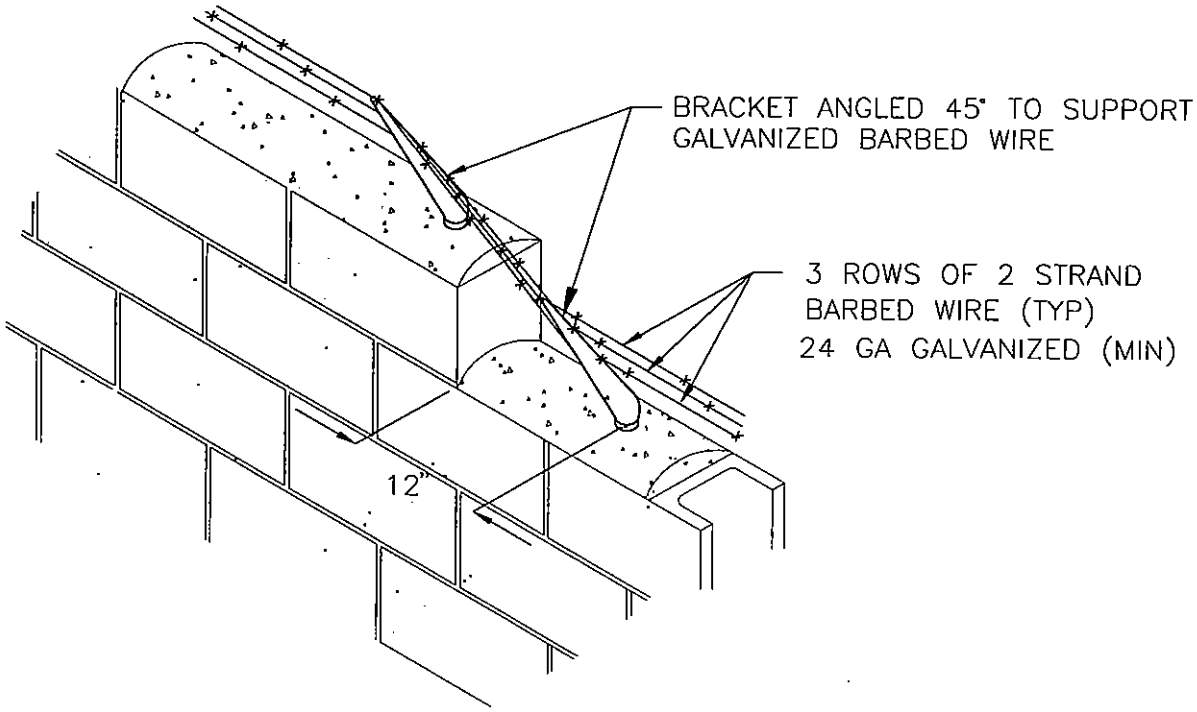

EXTENSION ARM CONFIGURATION AT STEP IN WALL

NOT TO SCALE WE08 070903

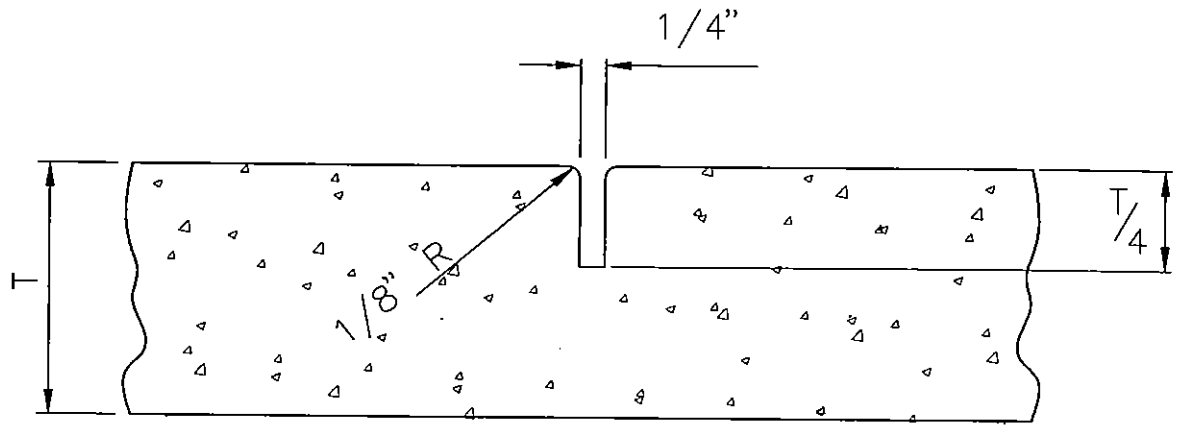

WEAKENED PLANE JOINT

NOT TO SCALE

WE09 070903

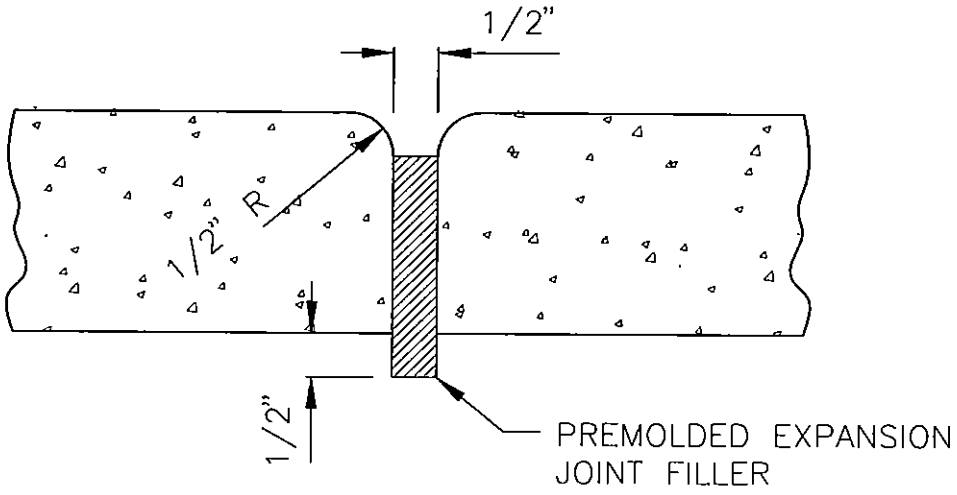

CONCRETE SLAB EXPANSION JOINT

NOT TO SCALE

WE10 070903

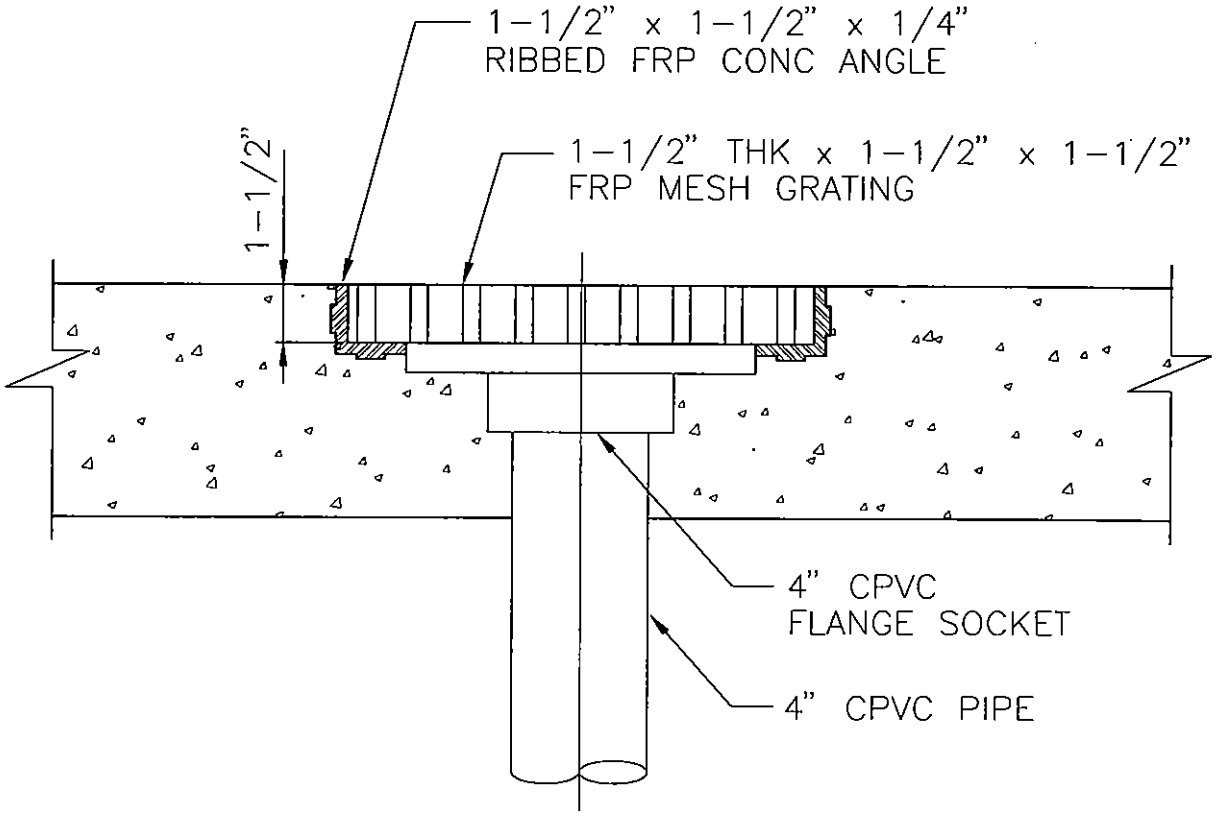

FLOOR DRAIN

NOT TO SCALE WE11 070903

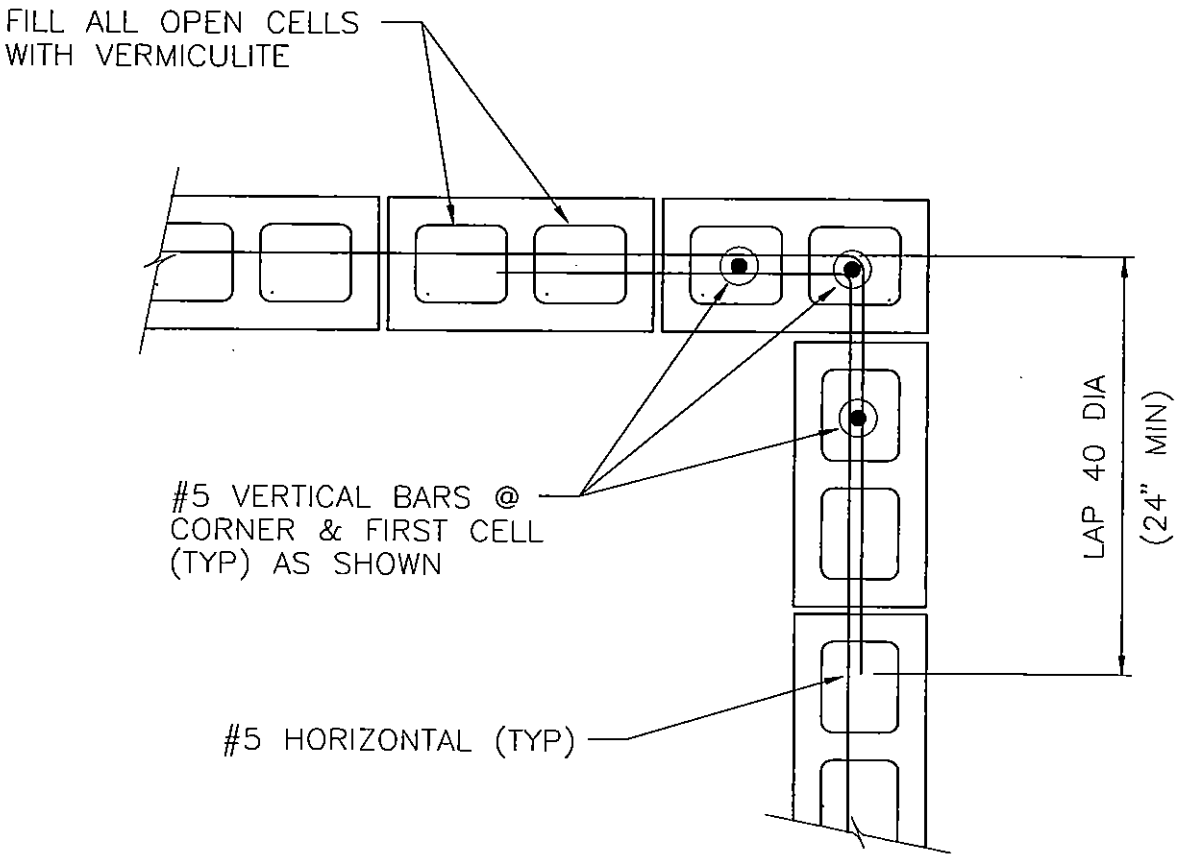

TYPICAL CORNER REINFORCING

NOT TO SCALE WE12 070903

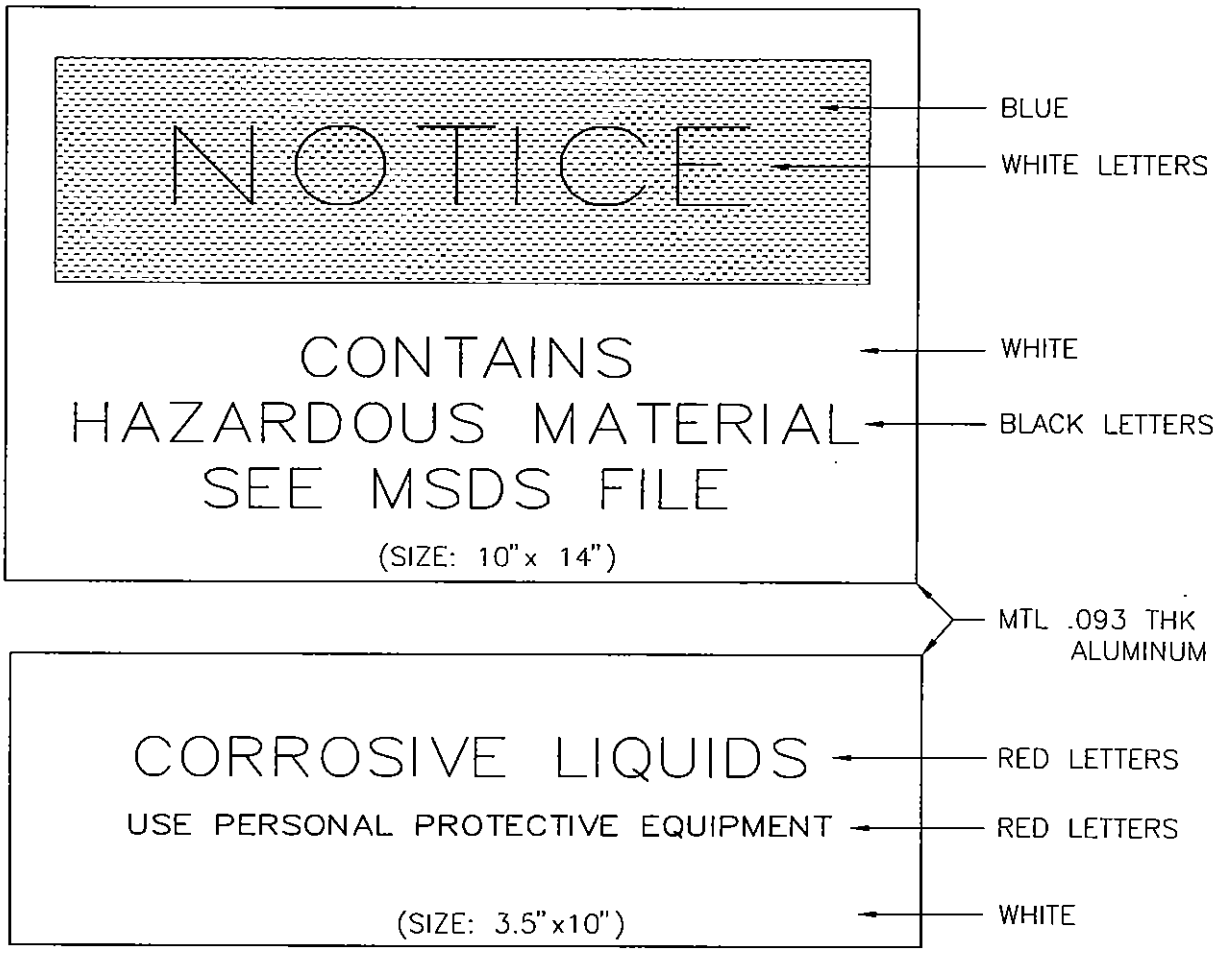

NOTE: SIZE, MATERIAL, LETTERING & COLOR COMBINATION ACCORDING TO "OSHA" STANDARDS.

NOTICE SIGNS

NOT TO SCALE WE13 070903

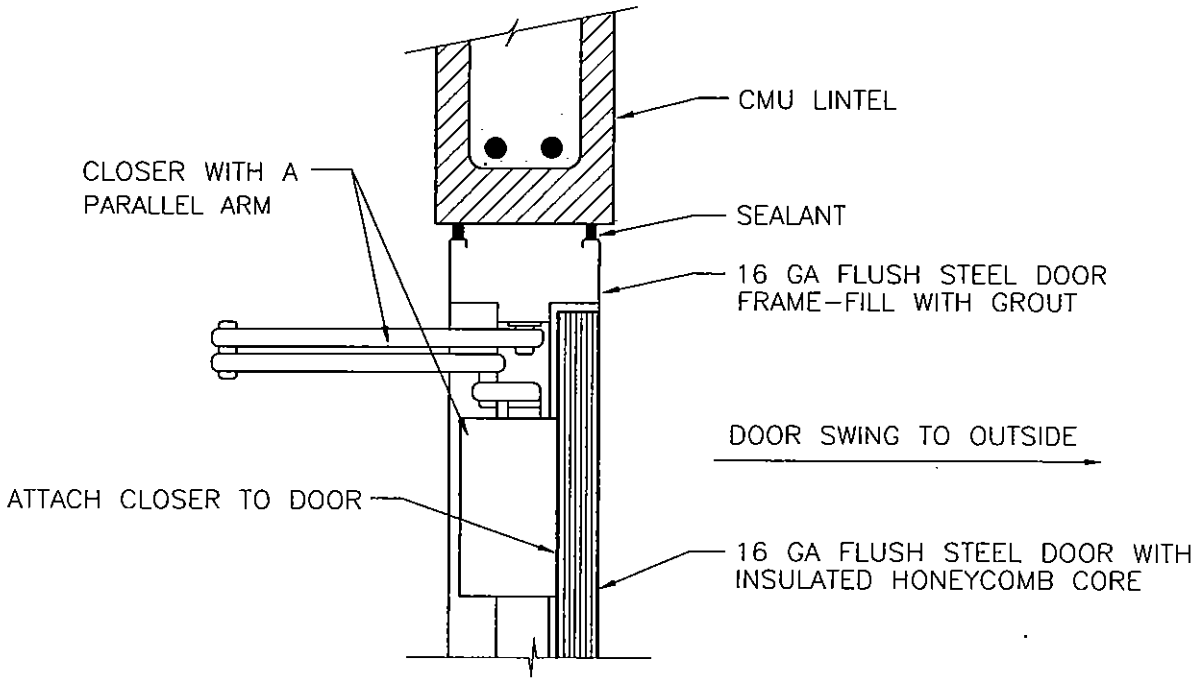

DOOR JAMB AND HEAD

NOT TO SCALE WE14 070903

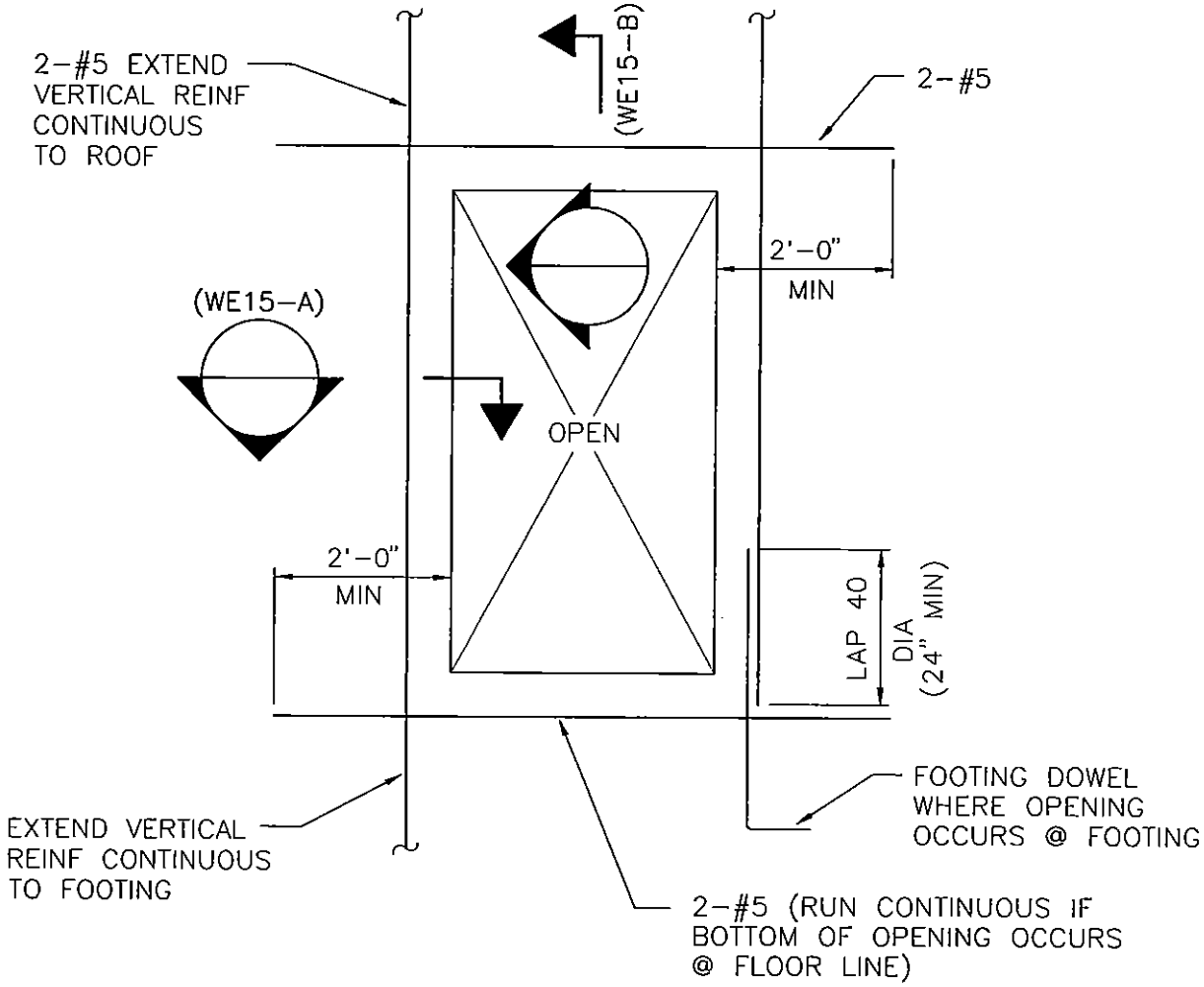

TYPICAL CMU WALL OPENING

NOT TO SCALE WE15 070903

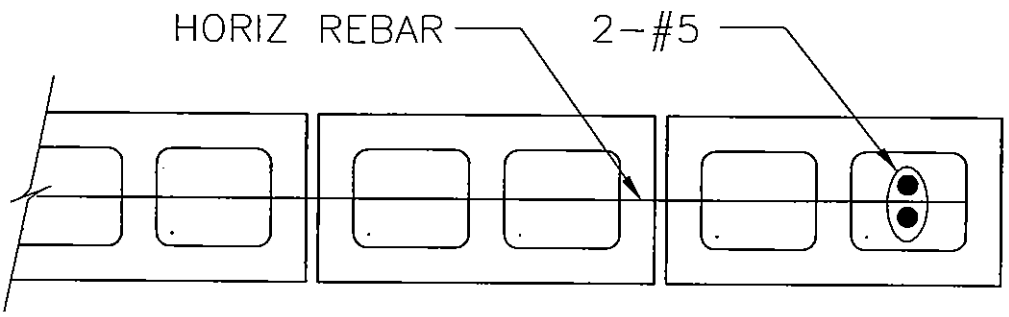

CMU WALL SECTION

NOT TO SCALE WE15-A 070903

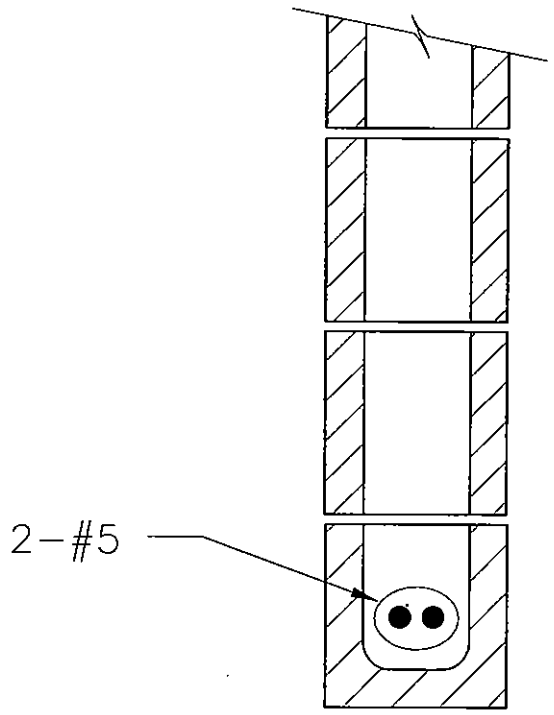

CMU WALL SECTION

NOT TO SCALE WE15-B 070903

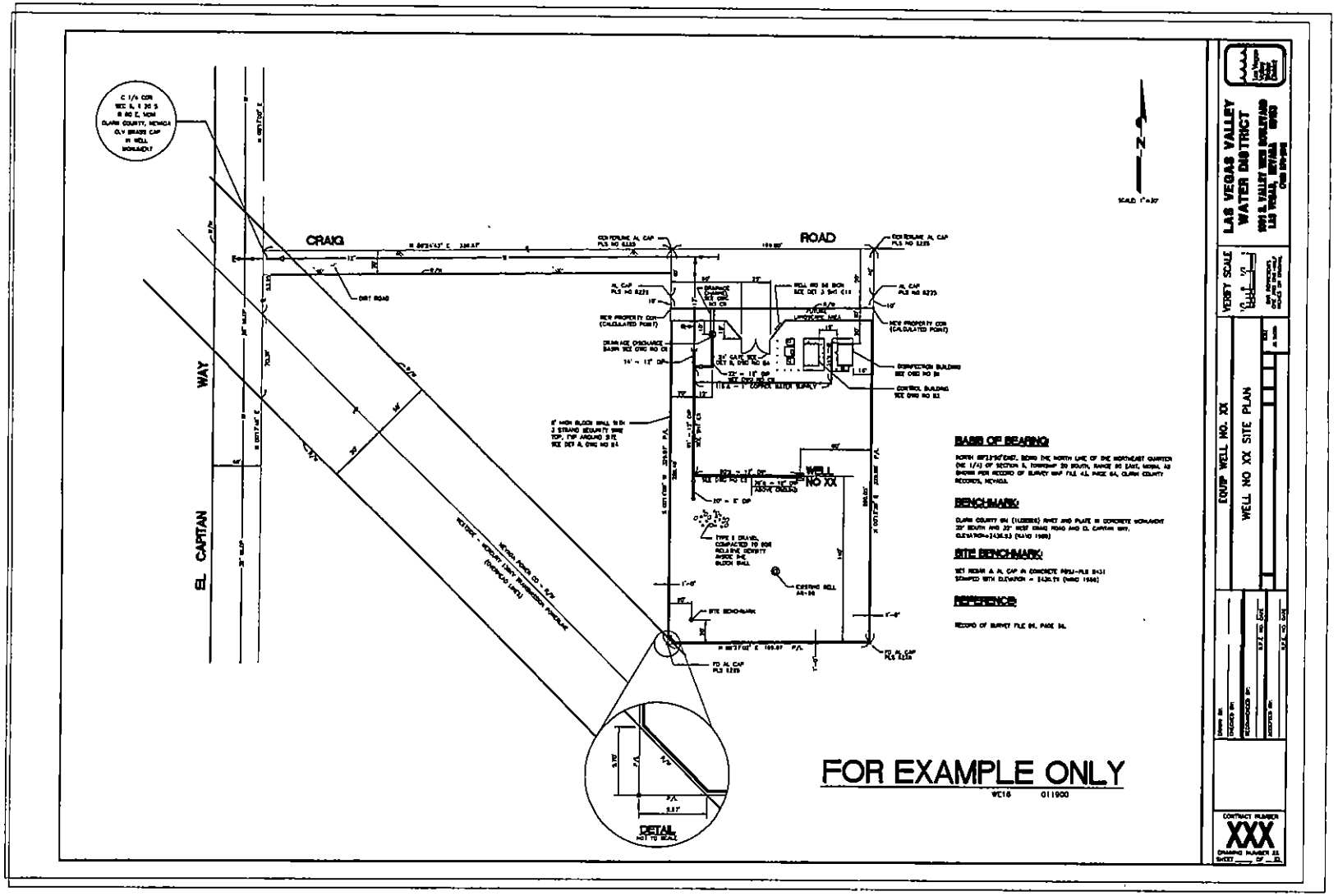
CRAIG
ROAD
EL CAPTAN
WAY
DIRT ROAD
WELL NO XX
DETAIL
NOT TO SCALE
FOR EXAMPLE ONLY
BASIS OF BEARING:
BENCHMARK:
SITE BENCHMARK:
REFERENCE:
LAS VEGAS VALLEY WATER DISTRICT
COMP WELL NO. XX
WELL NO XX SITE PLAN
CONTRACT NUMBER
XXX

PLOT SCALE: 1 = 4

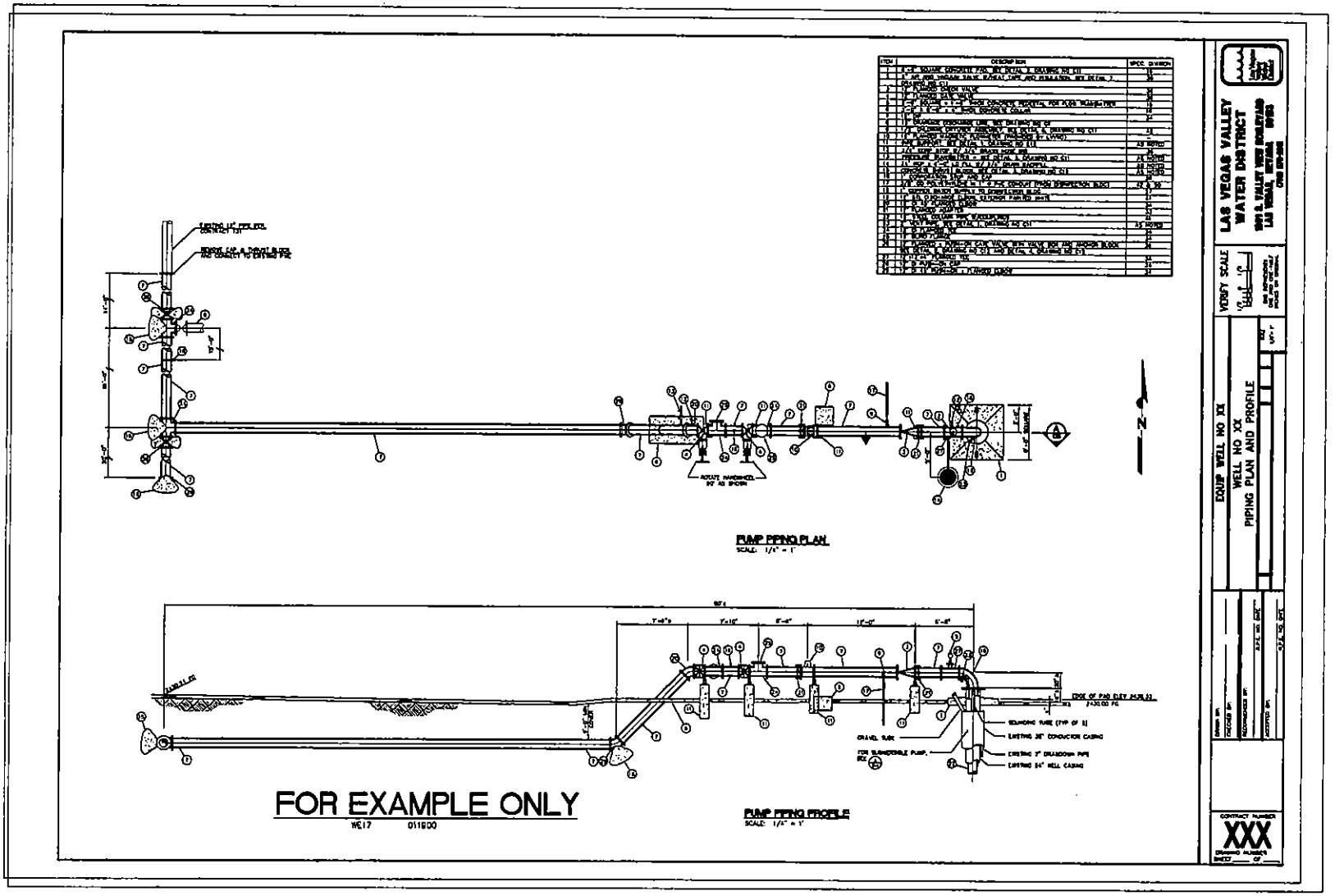

PLOT SCALE: 1 = 4

FOR EXAMPLE ONLY

WC16 011900

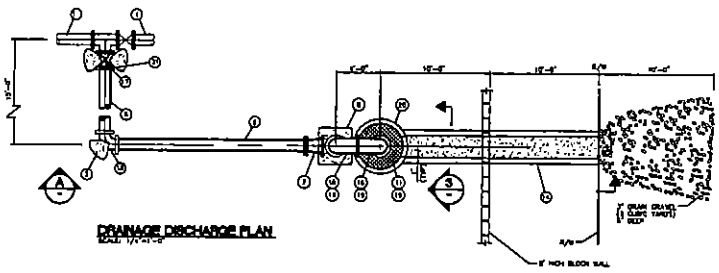

DRAINAGE DISCHARGE PLAN

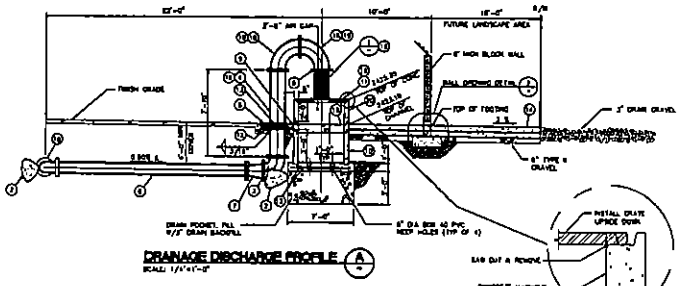

DRAINAGE DISCHARGE PROFILE

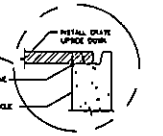

ALTERNATE CONFIGURATION

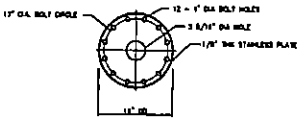

ORIFICE PLATE

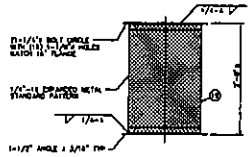

SAFETY SCREEN

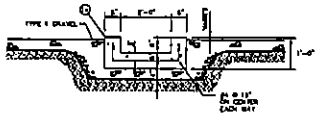

DRAINAGE CHANNEL

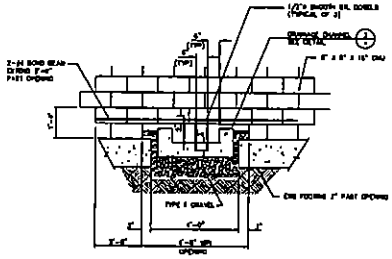

WALL OPENING DETAIL

LAS VEGAS VALLEY WATER DISTRICT

EQUIP WELL NO XX

WELL NO XX DRAINAGE DISCHARGE PLAN AND PROFILE

XXX

PLOT SCALE: 1 = 1

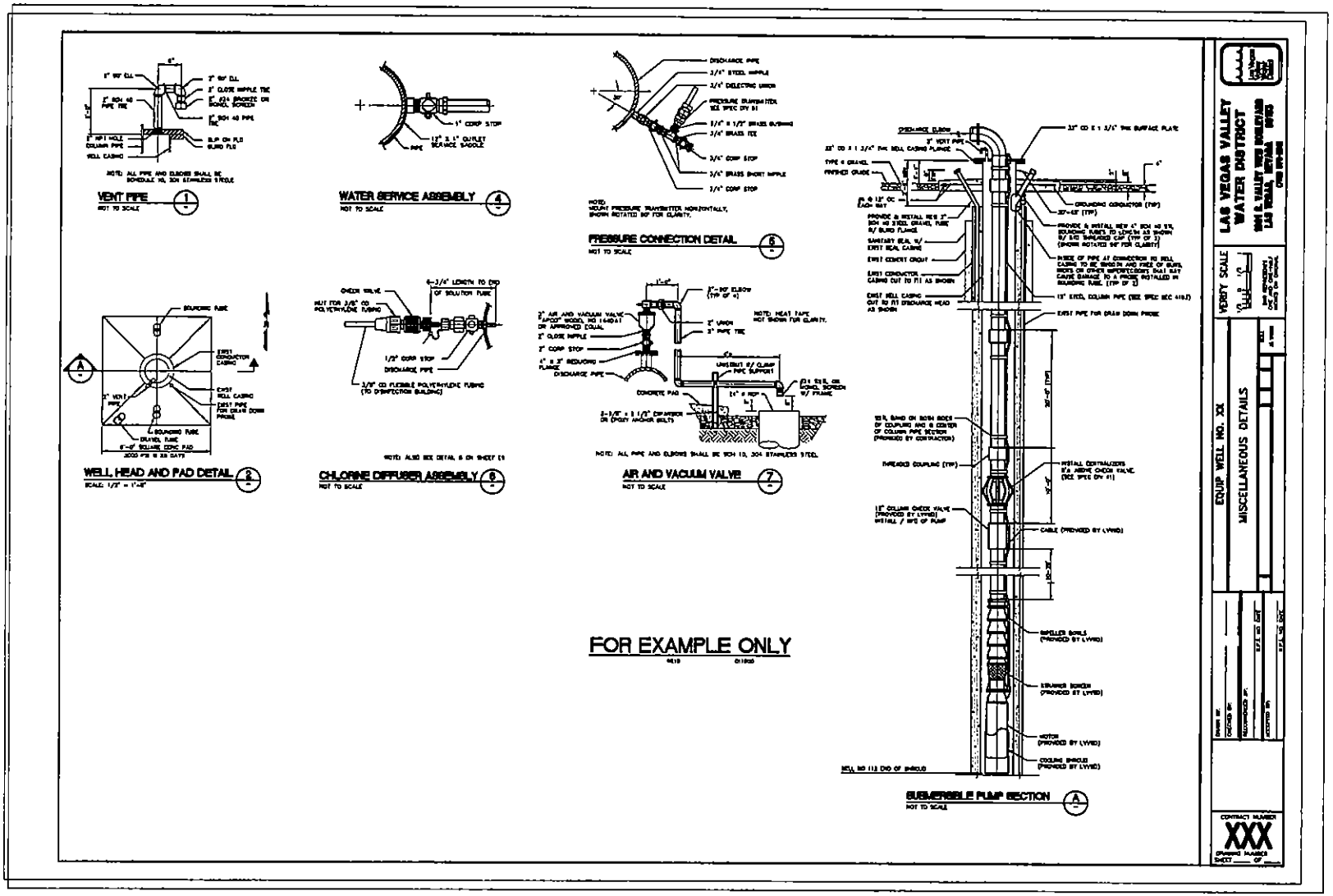

LAS VEGAS VALLEY WATER DISTRICT
DESIGN DETAIL STANDARDS

TABLE OF CONTENTS

DESCRIPTION	REV. DATE	DWG NO.
ELECTRICAL		
Abbreviation List/Symbol Legend	07-01-03	E01-1
Typical Trench Detail	07-01-03	E02-1
Pullbox with Conduit Sweeps	08-20-03	E02-2
Pullbox with Side Penetrations	03-02-05	E02-3
Pullbox Detail	05-07-04	E02-3A
Typical Grounding Detail at Well Casing	07-01-03	E02-4
Connection Detail at Well	07-23-03	E02-5
Electrical Connection at Metering Pump	07-23-03	E02-6
Equipment Grounding Plate Detail	08-12-06	E02-7
Future Equipment Grounding Plate Detail	09-14-06	E02-8
Typical Conduit Bank Detail	07-01-03	E02-9
Conduit Riser	08-01-06	E03-1
Vault Wall Conduit Penetration Detail	07-01-03	E03-2
On-Site Light Pole and Base Detail	09-03-04	E03-3
Liquid Level Switch Installation	10-06-05	E04-1
Exhaust Fan/Louvers Diagram (for reference only)	08-03-04	E04-2
Metering Pump (for reference only)	06-22-07	E04-3
Single Line Diagram (for reference only)	07-01-03	E04-4
Butterfly M.O.V. Diagram (for reference only)	07-01-03	E04-5
Security Annunciator Panel II	01-25-07	E04-6
Security Annunciator Panel I	02-03-07	E04-7
208/120V Distribution Panel	10-06-05	E05-1A
120/240V Distribution Panel	10-06-05	E05-1B
Conduit, Wire & Cable Schedule	10-06-05	E05-2
Vault Plan (for reference only)	07-06-06	E06-1A
Vault Section (for reference only)	07-06-06	E06-1B
Overflow Structure (for reference only)	07-06-06	E06-2
Reservoir Access (for reference only)	07-06-06	E06-3
Vault Access Security Switch Mounting Detail	09-06-06	E06-4
Groundwell System	08-01-06	E06-6
PLC – Power Distribution Diagram	07-01-03	E07-1
PLC – Typical Analog Inputs	07-01-03	E07-2
Instrumentation and Control PLC Cabinet Analog Inputs	11-17-03	E07-2A
Instrumentation and Control Typical Analog Loop Diagram	11-17-03	E07-2B
Instrumentation and Control Typical Digital Field Loop Diagram	11-17-03	E07-2C

TABLE OF CONTENTS

DESCRIPTION	REV. DATE	DWG NO.
Instrumentation and Control Isolated Digital Inputs/Outputs	11-17-03	E07-3
Instrumentation and Control Motor RTD Loop Diagram	11-17-03	E07-3A
PLC – Isolated Digital Outputs	07-01-03	E07-4
PLC – Data Highway Plus/RS-232 Interface Card	07-01-03	E07-5
PLC – 4 Pump Internal Layout	07-01-03	E07-6
PLC – 4 Pump Bill of Materials	07-01-03	E07-7
PLC – 8 Pump Internal Layout	07-01-03	E07-8
PLC – 8 Pump Bill of Materials	07-01-03	E07-9
PLC – 4 Pump Terminal Block Layout	07-01-03	E07-10
PLC – 8 Pump Terminal Block Layout	01-19-00	E07-11
PLC – Enclosure Details	07-01-03	E07-12
PLC – Conduit Stub Layout Detail	07-01-03	E07-13
5K Zone Pump Control Schematic I (With Auto Transformer)	11-17-03	E07-17
5K Zone Pump Control Schematic II (With Auto Transformer)	11-17-03	E07-18
PLC Multiple Rack Configuration	11-17-03	E07-19
Reservoir Instrument Housing	07-01-03	E08-1
Reservoir Basin Level Enclosure Layout	09-10-08	E08-2
Reservoir Basin Level Enclosure Wiring	10-06-08	E08-3
Reservoir Basin Level Enclosure Cable Support	10-06-08	E08-4
Reservoir High Water Probe Installation	07-01-03	E08-5
Reservoir Roof Conduit Bank Detail	07-01-03	E08-6
Single Door Security System (Electrical Strike)	07-01-03	E09-1
Single Door Security System (Monitored Doorway)	07-01-03	E09-2
Single Door Security System (Electrical Lock)	07-01-03	E09-3
Double Door Security System (Electrical Strike)	07-01-03	E09-4
Double Door Security System (Monitored Doorway)	07-01-03	E09-5
Double Door Security System (Electrical Lock)	07-01-03	E09-6
Position Switch at Roll Up Door	07-01-03	E09-7
Telephone/Security System Components	11-21-06	E09-8
Enclosure Support Stand	09-06-06	E10-1
Enclosure Support Stand Conduit	09-06-06	E10-2
Hypochlorite Level Display Panel (Front View)	10-28-04	E11-1
Hypochlorite Level Display Panel (Side View)	10-28-04	E11-2
Hypochlorite Level Display Panel (Top View)	10-28-04	E11-3
Swivel Configuration - Top	10-28-04	E11-4A
Swivel Configuration - Bottom	10-28-04	E11-4B
Bolt Hole Alignment Wall Bracket (Back Plate)	10-28-04	E11-5
Installation of Conduit Sealing Fitting	10-28-04	E11-6

LAS VEGAS VALLEY WATER DISTRICT
DESIGN DETAIL STANDARDS

TABLE OF CONTENTS

DESCRIPTION	REV. DATE	DWG NO.
Pump Station Building Typical Security System Layout	10-28-07	E12-1
Security System Interior Ceiling Mount Camera	10-29-07	E13-1
Security System Interior and Exterior Wall Mount Camera	10-29-07	E13-2
Security System Exterior Corner Mount Camera	10-29-07	E13-3
Camera Pole Base	08-31-09	E13-4
LTG Pole and CCTV Camera	06-23-10	E13-5
Site – One Line Diagram (for reference only)	07-18-06	E14-1
Site – One Line Diagram W/Generator (for reference only)	07-18-06	E14-2
Typical Single Line Diagram and Elevation for 5Kv Motor Control with RVAT and RVSS Starters	04-19-07	E14-3
Typical RVAT Motor Starter with GE 469 MPR for 400-900 HP at 4160 Volts, 3 Dia, 60Hz Schematic Diagram I	04-19-07	E14-4A
Typical RVAT Motor Starter with GE 469 MPR for 400-900 HP at 4160 Volts, 3 Dia, 60Hz Schematic Diagram II	04-19-07	E14-4B
Typical RVSS Motor Starter with GE 469 MPR for 400-900 HP at 4160 Volts, 3 Dia, 60Hz Schematic Diagram I	04-19-07	E14-5A
Typical RVSS Motor Starter with GE 469 MPR for 400-900 HP at 4160 Volts, 3 Dia, 60Hz Schematic Diagram II	04-19-07	E14-5B
Typical Single Line Diagram and Elevation for 480 Volt Switchgear and Motor Control Center	04-19-07	E14-6
Typical 480 Volt Motor Control Center PQM-II Meter Diagram	04-17-07	E14-7
Typical FVNR Motor Starter with OLVD's for ½ - 75 HP at 480 Volts, 3 Dia, 60 Hz Schematic Diagram	04-19-07	E14-8
Typical RVSS Motor Starter for 100 - 300 HP at 480 Volts, 3 Dia, 60 Hz Schematic Diagram	04-19-07	E14-9
Typical VFD Motor Controller for 100 - 300 HP at 480 Volts, 3 Dia, 60 Hz Schematic Diagram	04-19-07	E14-10
Facility UPS Distribution	06-05-05	E15-1
PRV Flow Metering Installation Details	12-24-07	E16-1
Terminal Box Detail	12-24-07	E16-2
Terminal Box Mounting Stand	12-24-07	E16-3
PRV Conduit Riser Layout	12-26-07	E16-4
PRV Panel Board Schedule	12-24-07	E16-5
PRV One-line Diagram	12-24-07	E16-6

ABBREVIATION LIST

A	AMPERE
AC	ALTERNATING CURRENT
A/C	AIR CONDITIONING
AF	AMPERE FRAME, CKT. BKR. RATING
AFF	ABOVE FINISHED FLOOR
AHU	AIR HANDLING UNIT
AL	ALUMINUM
AM	AMMETER
ANN	ANNUNCIATOR
AMP	AMPERES, AMPERAGE
APPD	APPROVED
AS	AMMETER SWITCH
AT	AMPERE TRIP
ATS	AUTOMATIC TRANSFER SWITCH
AUTO	AUTOMATIC
AUX	AUXILIARY
AWG	AMERICAN WIRE GAUGE
BATT	BATTERY
BKR	BREAKER
BLDG	BUILDING
C	CONDUIT
CAB	CABINET
CB	CIRCUIT BREAKER
CKT	CIRCUIT
CO	CONDUIT ONLY
COND	CONDUIT
COMPT	COMPARTMENT
COMPR	COMPRESSOR
CP	CONTROL PANEL
CPT	CONTROL POWER TRANSFORMER
CR	CONTROL RELAY
CT	CURRENT TRANSFORMER
CU	COPPER
DC	DIRECT CURRENT
DH	DATA HIGHWAY
DISC	DISCONNECT
DISTR	DISTRIBUTION
DPDT	DOUBLE POLE DOUBLE THROW
DWG	DRAWING
E	EMPTY
EF	EXHAUST FAN
ELEV	ELEVATION
EMERG	EMERGENCY
EMT	ELECTRICAL METALLIC TUBING
ENCL	ENCLOSURE
EP	EXPLOSION PROOF
EQPT	EQUIPMENT
ER	CONDUCTANCE RELAY
ETM	ELAPSED TIME METER
EHU	ELECTRIC HEATING UNIT
EXH	EXHAUST
EXIST	EXISTING
FDR	FEEDER
FLEX	FLEXIBLE
FLUOR	FLUORESCENT
FUT	FUTURE
FVR	FULL VOLTAGE REVERSING
FVNR	FULL VOLTAGE NON-REVERSING
FWD	FORWARD
GALV	GALVANIZED
GEN	GENERATOR
GND	GROUND
HH	HAND HOLE
HID	HIGH INTENSITY DISCHARGE
HG	MERCURY
HOA	HAND-OFF-AUTOMATIC
HP	HORSEPOWER
HPS	HIGH PRESSURE SODIUM
HTR	HEATER
HT TR	HEAT TRACED
HVAC	HEATING, VENTILATING, A/C
HZ	HERTZ - CYCLES PER SECOND
IMC	INTERMEDIATE METAL CONDUIT
INCAND	INCANDESCENT
IND	INDICATION, INDICATING
I/O	INPUT/OUTPUT
INST	INSTANTANEOUS
INSTR	INSTRUMENT
I_{SC}	SHORT CIRCUIT CURRENT
INVT	INVERT
JB	JUNCTION BOX
J BOX	JUNCTION BOX
KVA	KILO VOLT AMPERES
KW	KILOWATTS
KWH	KILOWATT HOUR
KCMIL	1,000 CIRCULAR MILS
LC	LIGHTING CONTACTOR
LCB	LOCAL CONTROL BOARD
LCP	LOCAL CONTROL PANEL
LOC	LOCAL
LO	LOCKOUT
LOS	LOCKOUT STOP
LS	LEVEL SWITCH
LT	LIGHT
LTG	LIGHTING
LTS	LIGHTS
M	MOTOR CONTACTOR COIL
MA	MILLIAMPS
MAN	MANUAL
MAG	MAGNETIC
MAX	MAXIMUM
MCC	MOTOR CONTROL CENTER
MCB	MAIN CONTROL BOARD
MCP	MOTOR CIRCUIT PROTECTOR
MD	MOTORIZED DAMPER
MH	MANHOLE
MH	MOUNTING HEIGHT
MIN	MINIMUM, MINUTES
MLO	MAIN LUGS ONLY
MOV	MOTOR OPERATED VALVE
MR	MULTI-RATIO
MS	MOTOR STARTER
MMS	MANUAL MOTOR STARTER
MTD	MOUNTED
MTR	MOTOR
MTS	MANUAL TRANSFER SWITCH
MUX	MULTIPLEXING PANEL
N	NEUTRAL
NA	NON-AUTOMATIC
NC	NORMALLY CLOSED
NO	NORMALLY OPEN
NO	NUMBER
NOS	NUMBERS
NP	NAMEPLATE
NPC	NEVADA POWER COMPANY
NIC	NOT IN CONTRACT
NTS	NOT TO SCALE
O	OPEN
OC	ON CENTER
CC	CENTER TO CENTER
OL	OVERLOAD RELAY
OSC	OSCILLATION
P	POLE
PB	PUSH BUTTON
PCM	PROCESS CONTROL MODULE
PCP	PROCESS CONTROL PANEL
PF	POWER FACTOR
PH, Ø	PHASE
PNL	PANEL
PNLBD	PANELBOARD
POS	POSITION
PQM	POWER QUALITY MONITOR
POT	POTENTIOMETER
PRI	PRIMARY
PS	PRESSURE SWITCH
PT	POTENTIAL TRANSFORMER
PVC	POLYVINYL CHLORIDE
PW	PART WINDING
PWR	POWER FACTOR
REC	RECEPTACLE
RECPTS	RECEPTACLES
REQ'D	REQUIRED
REV	REVERSE
RGS	RIGID GALVANIZED STEEL
RTU	REMOTE TERMINAL UNIT
RVAT	REDUCED VOLTAGE AUTOTRANSFORMER
RVNR	REDUCED VOLTAGE NON-REVERSING
RVSS	REDUCED VOLTAGE SOLID STATE
SCH	SCHEDULE
SEC	SECONDARY, SECONDS
SECT	SECTION
SEL SW	SELECTOR SWITCH
SEQ	SEQUENCE
SH	SHIELD
SHLD	SHIELDED
SHT	SHEET
SIG	SIGNAL
S1, S2	START CONTACTOR COILS
SP	SPARE
SPDT	SINGLE POLE DOUBLE THROW
SPECS	SPECIFICATIONS
SP HTR	SPACE HEATER
SPST	SINGLE POLE SINGLE THROW
SS	SOLID STATE
ST	SHUNT TRIP
STA	STATION
STD	STANDARD
STL	STEEL
STR	STARTER
SOV	SOLENOID OPERATED VALVE
SW	SWITCH
SYS	SYSTEM
SYM	SYMMETRICAL
TB	TERMINAL BOX
TC	TIME CLOCK
TACH	TACHOMETER
TEMP	TEMPERATURE
TERM	TERMINAL
TSTAT	THERMOSTAT
TR	TIMING RELAY
TD	TIME DELAY
TS	TEMPERATURE SWITCH
TYP	TYPICAL
TDON	TIME DELAY - ON
TDOFF	TIME DELAY - OFF
UG	UNDERGROUND
UH	UNIT HEATER
UON	UNLESS OTHERWISE NOTED
US	UNIT SUBSTATION
V	VOLTAGE, VOLTS
VAR	VAR METER
VFD	VARIABLE FREQUENCY DRIVE
VP	VAPOR PROOF
VS	VOLTMETER SWITCH, VARIABLE SPEED
W	WATTS, WIRE
WHD	WATTHOUR DEMAND METER
WHM	WATTHOUR METER
WP	WEATHERPROOF
XD	TRANSDUCER
XFMR	TRANSFORMER
XFER	TRANSFER
XMTR	TRANSDUCER
XPDR	TRANSPONDER

GENERAL NOTES

1. PRIOR TO BEGINNING EXCAVATION, VERIFY LOCATIONS OF EXISTING AND NEW UNDERGROUND UTILITIES, PIPING, ETC. PROVIDE EXCAVATION, BACKFILL, SUPPORT, SAWCUTTING, PATCHING, PAVING, ETC. AS REQUIRED. BACKFILL EXCAVATIONS TO 90 PERCENT COMPACTION AND PATCH TO MATCH EXISTING CONDITIONS.
2. ALL DIRT AND DEBRIS SHALL BE REMOVED FROM ALL MANHOLES AND PULLBOXES. DISPOSE OF AS DIRECTED BY THE LAS VEGAS VALLEY WATER DISTRICT.
3. DO NOT SCALE DRAWINGS. VERIFY DIMENSIONS IN FIELD PRIOR TO BEGINNING WORK.
4. FINAL CONNECTIONS TO EQUIPMENT SHALL BE PER MANUFACTURER'S APPROVED WIRING DIAGRAMS, DETAILS AND INSTRUCTIONS. IT SHALL BE THE CONTRACTOR'S RESPONSIBILITY TO PROVIDE MATERIALS AND EQUIPMENT COMPATIBLE WITH EQUIPMENT ACTUALLY SUPPLIED.
5. CONTRACTOR SHALL VISIT JOB SITE PRIOR TO BID AND VERIFY THAT CONDITIONS ARE AS INDICATED. CONTRACTOR SHALL INCLUDE IN HIS BID COSTS, THE REQUIREMENTS TO MAKE HIS WORK MEET THE EXISTING CONDITIONS.
6. THIS IS A STANDARD LEGEND SHEET. SOME SYMBOLS OR ABBREVIATIONS MAY APPEAR ON THIS SHEET AND NOT ON THE PLANS.

ELECTRICAL LEGEND

SYMBOL	DESCRIPTIONS
A / 3 / e	A = REFERENCE TO LIGHTING FIXTURE SCHEDULE 3 = LIGHTING PANEL CIRCUIT NUMBER e = SWITCH ASSOCIATED WITH FIXTURE CONTROL
	1' x 4' FLUORESCENT FIXTURE, SURFACE MOUNTED
	FLUOR. FIXTURE, NIGHT LIGHT
	FLUOR. FIXTURE, EMERGENCY LIGHT
	LUMINAIRE, CEILING MOUNTED (SURFACE)
	LUMINAIRE, EXTERIOR WALL MOUNTED (SURFACE)
	LUMINAIRE, CEILING MOUNTED, (RECESSED)
	FLOODLIGHT, MOUNTING AND WATTAGE AS SPECIFIED
	LUMINAIRE, PENDANT MOUNTED, LAMP AS SPECIFIED
	EMERGENCY LIGHTING
	POWERED EMERGENCY EXIT SIGN
SD	SMOKE DETECTOR
	TEL. RECEPTACLE, 3/4" HOME RUN U.O.N.
	SPECIAL SINGLE GANG DEVICE BOX
	DUPLEX RECEPTACLE, MT. HEIGHT SHOWN
GFCI	GFCI DUPLEX RECEPTACLE, MT. HEIGHT SHOWN
GFCI	DUPLEX RECEPTACLE, WEATHERPROOF, GROUND FAULT TYPE
	SPECIAL RECEPTACLE AS NOTED
$	SINGLE POLE SWITCH
$3	THREE-WAY SWITCH
$4	FOUR-WAY SWITCH
$L	LIGHTED SWITCH
$DIM	DIMMER SWITCH
$M	MANUAL MOTOR STARTER
	CONDUIT SEAL
	CONDUIT UNION
T	TRANSFORMER
PC	PHOTOCELL

SYMBOL	DESCRIPTIONS
	DISTRIBUTION PANEL
	LIGHTING AND BRANCH CIRCUIT PANEL
	TERMINAL CABINET, TYPE AS SPECIFIED
5	MOTOR, NUMBER INDICATES HORSEPOWER
1/3	MOTOR, FRACTIONAL HORSEPOWER
F.A.C.P.	FIRE/SECURITY ALARM CONTROL PANEL
	THERMOSTAT
J	JUNCTION BOX
	INTRUSION DETECTOR, INSTRUMENT, DEVICE AS NOTED
	SHUNT TRIP
H	HEAT DETECTOR
HF	FIRE ALARM PULL STATION
LC	LIGHTING CONTACTOR
	MOTION SWITCH, ADJUSTABLE "ON" TIMER
	CONDUIT RUN INTERRUPTED
	CONDUIT, TURNED UP, TOWARD VIEWER
	CONDUIT, TURNED DOWN, AWAY FROM VIEWER
	CROSSHATCHING INDICATES COUNTS OF No. 12 CONDUCTORS IF MORE THAN 3. NO CROSSHATCHING INDICATES 2 No. 12 AND 1 No. 12 GROUND. LONG HATCH IS A NEUTRAL AND "/ IS GROUND CONDUCTOR
FUT	FUTURE BRANCH CIRCUIT FEEDER OR DUCT EXPOSED
FUT	FUTURE BRANCH CIRCUIT, FEEDER OR DUCT CONCEALED OR BELOW GRADE
EXIST	EXISTING BRANCH CIRCUIT FEEDER OR DUCT EXPOSED
EXIST	EXISTING BRANCH CIRCUIT, FEEDER OR DUCT CONCEALED OR BELOW GRADE
	NEW BRANCH CIRCUIT FEEDER OR DUCT EXPOSED
	NEW BRANCH CIRCUIT, FEEDER OR DUCT CONCEALED OR BELOW GRADE
XXXXX	EXISTING EQUIPMENT, CONDUIT AND WIRING TO BE REMOVED

SINGLE LINE LEGEND

	FULL VOLTAGE, NON-REVERSING MOTOR STARTER, SIZE 2 SHOWN, WITH RATINGS AND SIZE AS SPECIFIED OR REQUIRED BY THE APPLICATION.
R	FULL VOLTAGE, REVERSING MOTOR STARTER, SIZES AND RATINGS AS SPECIFIED ON THE DIAGRAM OR BY MOTOR RATINGS.
2	FULL VOLTAGE, 2 - SPEED MOTOR STARTER, SIZE AND RATINGS AS SPECIFIED ON THE DIAGRAM OR BY MOTOR RATINGS.
RV	REDUCED VOLTAGE MOTOR STARTER, NON-REVERSING, TYPE AS SPECIFIED, RATINGS IN ACCORDANCE WITH APPLICATION.
RVSS	REDUCED VOLTAGE MOTOR STARTER, NON-REVERSING, SOLID STATE WITH STARTING CHARACTERISTICS AND RATINGS AS SPECIFIED.
52	MEDIUM VOLTAGE CIRCUIT BREAKER, CONTINUOUS RATING AS INDICATED
150A / JP / I=500	LOW VOLTAGE THERMAL MAGNETIC CIRCUIT BREAKER, TRIP RATING, INSTANTANEOUS TRIP, AND NUMBER OF POLES AS INDICATED.
15A / MCP / T=75	LOW VOLTAGE MOTOR CIRCUIT PROTECTOR, CONTINUOUS RATING AND TRIP SETTING AS INDICATED
1000A / LSIG	LOW VOLTAGE ELECTRONIC CIRCUIT BREAKER, RATING PLUG AND TRIP CURVES AS INDICATED: L - LONG TIME I - INSTANTANEOUS S - SHORT TIME G - GROUND
	DISCONNECT SWITCH, NUMBER OF POLES AND RATINGS AS SPECIFIED OR REQUIRED BY THE APPLICATION. "F" DENOTES FUSED.
	TRANSFORMER, NUMBER OF PHASES, CONFIGURATION, RATINGS, AND IMPEDANCE AS INDICATED OR SPECIFIED.
75	MOTOR. TYPE AS REQUIRED BY THE APPLICATION, HORSEPOWER AND FULL LOAD AMPERES ( ) AS SHOWN ON THE DIAGRAM.
GEN	GENERATOR. KW AS SHOWN ON THE DIAGRAM.
##	PROTECTIVE RELAY, TYPE AS NOTED BY ##: 50 - INSTANTANEOUS OVERCURRENT 51 - TIME OVERCURRENT 49 - TEMPERATURE 63 - SUDDEN PRESSURE 63X - SUDDEN PRESSURE AUX RELAY 71 - LIQUID LEVEL
	CONTROL DEVICE, LOCATION AS INDICATED ON THE DIAGRAM, STOP-START.
	CONTROL DEVICE, LOCATION AND FUNCTION AS INDICATED ON THE DIAGRAM.
	CONTROL DEVICE, LOCATION AS INDICATED ON THE DIAGRAM, HAND-OFF-AUTO.
	CONTROL DEVICE, LOCATION AND TYPE AS INDICATED ON THE PLANS OR DIAGRAM.
	LOCAL INDICATING PILOT LIGHT, COLOR AND TYPE AS SPECIFIED OR INDICATED ON THE DIAGRAM.
	INDICATING PILOT LIGHT, COLOR AND TYPE AS SPECIFIED ON THE DIAGRAM.
	OUTLINE OF FUTURE ELECTRICAL AND MECHANICAL EQUIPMENT
	SPACE HEATER, VOLTAGE AND RATING AS INDICATED ON THE DIAGRAM.
	WINDING TEMPERATURE SENSOR, TYPE AS SUPPLIED BY MOTOR MANUFACTURER.
	FIELD INSTRUMENT, PRESSURE, TEMPERATURE, FLOW, LEVEL SWITCH OR TRANSMITTER AS INDICATED ON THE DIAGRAM OR PLANS.
SS	DENOTES BREAKER SHALL BE SOLID STATE TRIP
GF	DENOTES BREAKER SHALL BE EQUIPPED WITH GROUND FAULT MONITORING AND TRIP
ST	DENOTES BREAKER SHALL BE EQUIPPED WITH SHUNT TRIP - INCLUDING CONTROL POWER TRANSFORMER AND FIELD WIRING TERMINALS FOR REMOTE PUSHBUTTON.
	EQUIPMENT OUTLINE
	VENDOR PACKAGED EQUIPMENT
	SURGE ARRESTER
	VACUUM CONTACTOR, 5kV, 3-POLE, RATINGS AND OPERATING MECHANISM AS DESCRIBED IN SPECIFICATIONS
	VACUUM CONTACTOR, MECHANICAL LATCH, 5kV, 3-POLE, RATINGS AND OPERATING MECHANISM AS DESCRIBED IN SPECIFICATIONS
	GANG OPERATED LOAD BREAK SWITCH, 3-POLE, WITH REPLACEABLE ARC SUPPRESSION
	GANG OPERATED SWITCH, 3-POLE, NON-LOAD BREAK
300/5 CT (3)	INSTRUMENT CLASS CURRENT TRANSFORMER, RATINGS AND BURDEN TO MATCH SYSTEM AND MONITORING DEVICES ONE PER PHASE PROVIDE WITH GROUND SHORTING TERMINAL STRIP
50/5 GSCT	GROUND SENSING CURRENT TRANSFORMER, INSTRUMENT CLASS, RATINGS TO MATCH INSTRUMENT BURDEN
X/5 BCT	BUSHING CURRENT TRANSFORMER (BCT), METERING CLASS, RATINGS AS INDICATED, FOR DIFFERENTIAL SERVICE ACROSS DELTA-WYE TRANSFORMER, PROVIDE MIRRORED WYE-DELTA CONNECTIONS, ALL CT'S TO BE TERMINATED ON GROUND SHORTING TERMINAL STRIPS
	VOLTAGE TRANSFORMER, INSTRUMENT CLASS, FUSED PRIMARY AND SECONDARY, OPEN DELTA CONFIGURATION
R / S	REDUCED VOLTAGE, NON-REVERSING AUTOTRANSFORMER TYPE STARTER WITH VACUUM CONTACTOR, OPEN-TRANSITION CONFIGURATION, AND FACTORY PREWIRED TAP SELECTION AT 65% FURNISH HEAVY DUTY STARTER WITH HIGH WINDING TEMPERATURE THERMISTOR AND ALARM RELAY
M	MOTOR CONTACTOR COIL
M	MOTORIZED OPERATOR
MTS 600A	TRANSFER SWITCH, AMPERE RATING AS NOTED: MTS: MANUAL ATS: AUTOMATIC

ELECTRICAL SCHEMATIC LEGEND

	LEVEL SWITCH, LSHH, LSH, LSL N.O. OR N.C. AS INDICATED
	FLOW SWITCH, N.C. OR N.O. AS INDICATED
	PRESSURE SWITCH, PSL, PSH, N.O. OR N.C. AS INDICATED
	TEMPERATURE SWITCH, TSH, TSL, N.O. OR N.C. AS INDICATED
	LIMIT SWITCH, N.C. OR N.O. AS INDICATED
	RELAY/CONTROL CONTACT, N.C. OR N.O. AS INDICATED
	TIME DELAY CONTACT, TIME DELAY ON/OFF, N.C./N.O. AS INDICATED
R1 ( )	RELAY COIL, FUNCTION, NUMBER AND CONTACTS ( ) AS SHOWN
	INDICATING LIGHT, LENS COLORS (R) RED, (G) GREEN, (W) WHITE
	PUSHBUTTON, MOMENTARY, N.O. OR N.C., L.O. = LOCKOUT
	PUSHBUTTON, MAINTAINED UNIVERSAL CONTACT
	ON-OFF SELECTOR SWITCH, MAINTAINED, FUNCTION AS SHOWN
L O R	SELECTOR SWITCH, MAINTAINED L-O-R = LOCAL-OFF-REMOTE, OR OTHER FUNCTION AS DESIGNATED
	FUSE, SIZE AS NOTED
	CONTROL POWER TRANSFORMER RATINGS AS INDICATED
	TERMINAL IN RELAY PANEL
	TERMINAL IN RTU
	TERMINAL IN PLC
	TERMINAL IN MOTOR STARTER
	TERMINAL AT FIELD DEVICE
	TERMINAL - EQUIPMENT OR DEVICE
	GROUND CONNECTION
	CIRCUIT BREAKER
	OVERLOAD ELEMENT
	AUTOTRANSFORMER WITH MULTIPLE TAPS SHOWN
	PREWIRED - BY OEM / INTEGRATOR
	FIELD WIRING
PP I: NNN/XX PP XX XX	PLC INPUT & ADDRESS
O: MMM/RR QQ QQ XX XX	PLC OUTPUT & ADDRESS

E01-1 041707

FOR REFERENCE ONLY

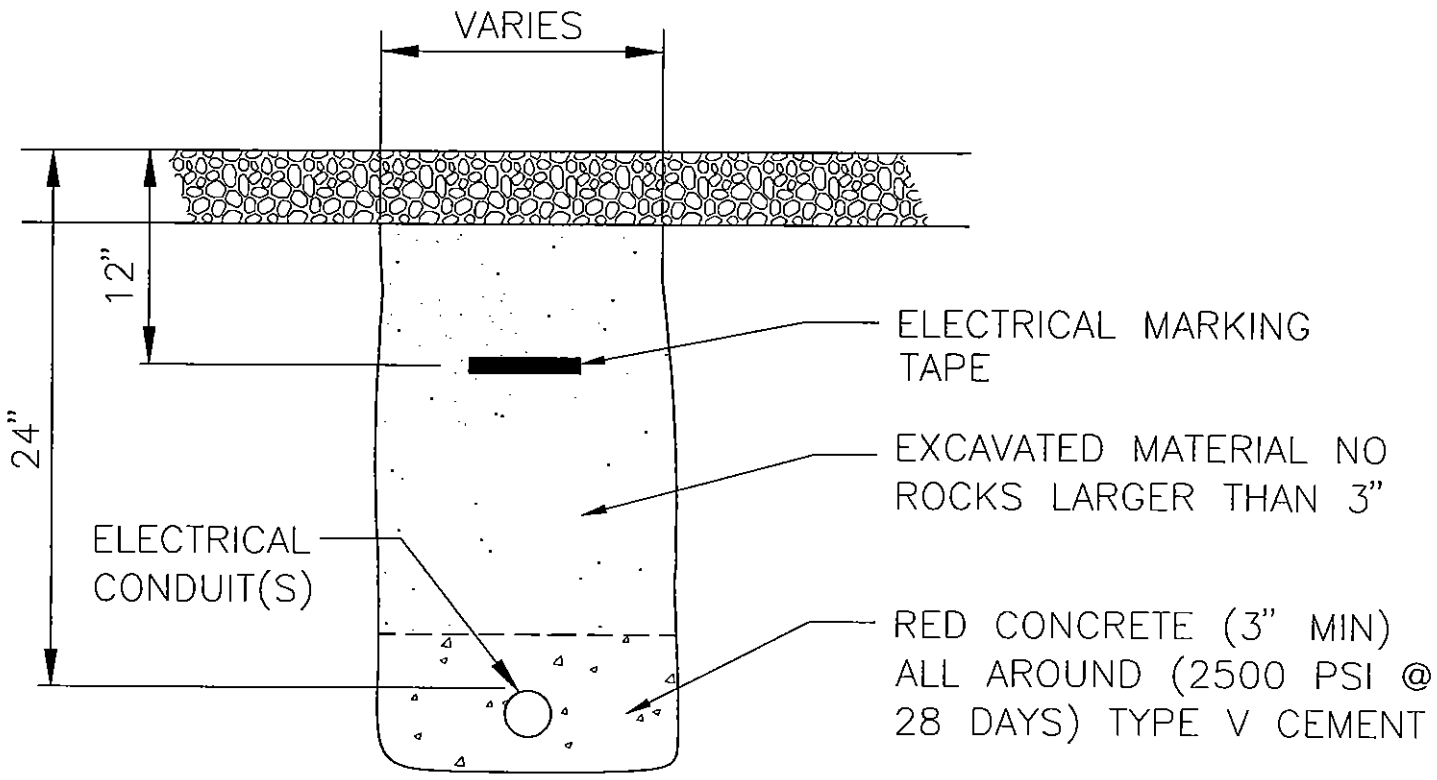

NOTES:

1. ALL CONDUITS ARE NOT TO BE PAINTED (TYP).
2. FOR ADDITIONAL REQUIREMENTS SEE NPC ESR DETAIL RT-7.

TYPICAL TRENCH DETAIL

NOT TO SCALE E02-1 070103

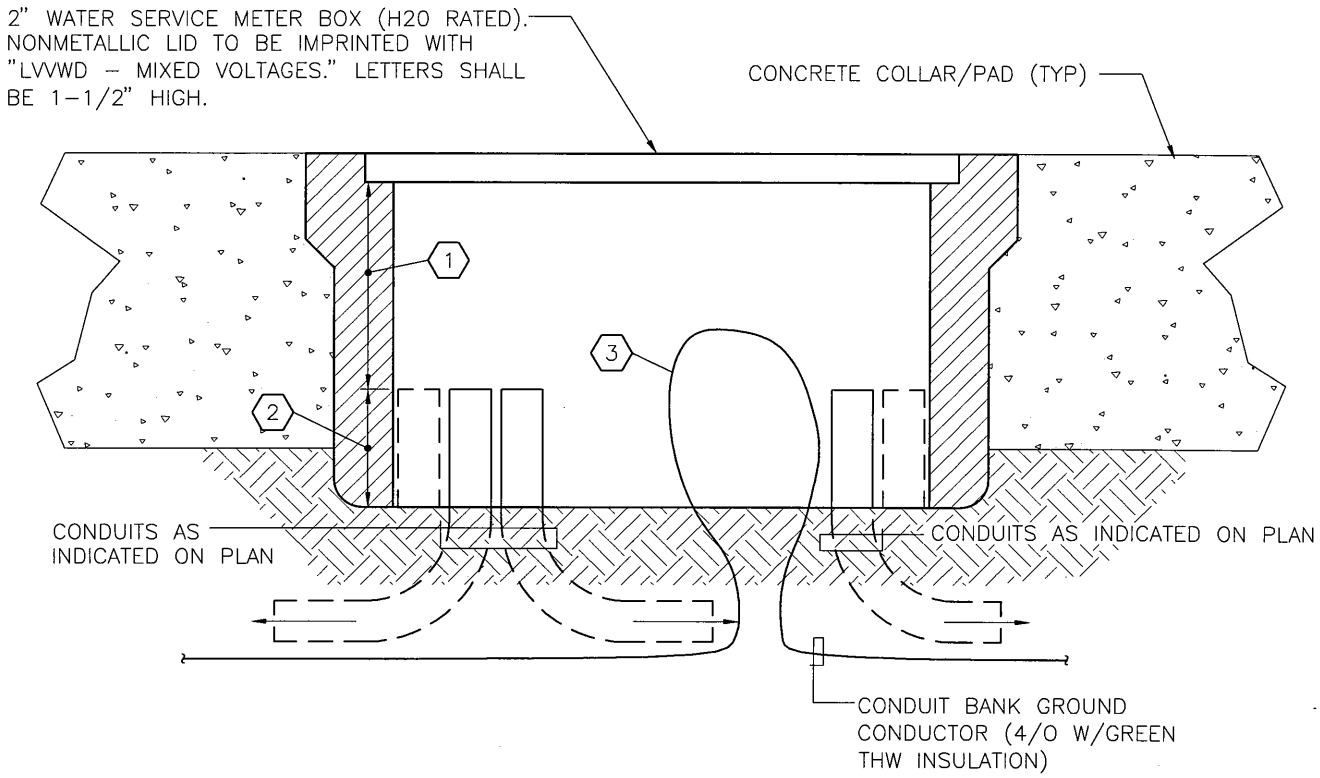

1. PROVIDE SUFFICIENT CLEARANCE FOR CONDUCTOR RADII.
2. CONDUIT TO EXTEND UP INTO PULLBOX AT LEAST 4".
3. PROVIDE 2' GROUND WIRE LOOP TO GROUND ALL METALLIC PULLBOX COMPONENTS. LABEL WIRE "PULLBOX GROUND LOOP"

PULLBOX WITH CONDUIT SWEEPS

NOT TO SCALE E02–2 082003

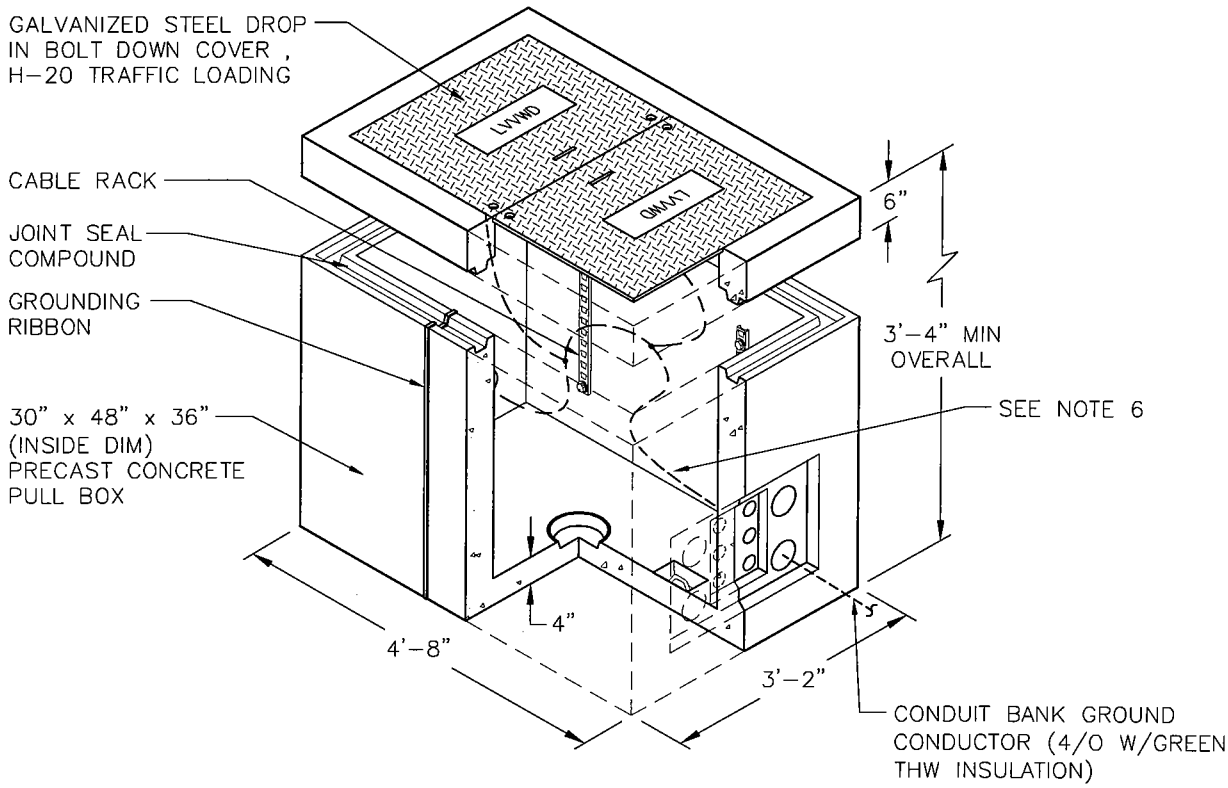

NOTES:

1. ENTIRE PULLBOX AND CONDUIT INSTALLATION SHALL BE CLEAN AND DRY AT TIME OF ACCEPTANCE.
2. BACKFILL AROUND PULLBOX WITH TYPE II AGGREGATE BASE (208.02.04) COMPACTED TO 95% MAX DENSITY.
3. APPLY SILICONE RTV TO CONDUIT ENTRANCE AFTER CONDUCTORS HAVE BEEN INSTALLED. ALL CONDUIT ENTRIES SHALL HAVE END BELLS FLUSH TO INTERIOR OF PULLBOX.
4. INSTALL 2' DIA x 2' DEEP DRAIN GRAVEL PACK UNDER 3" DRAIN HOLE AND COVER.
5. ROUTE GROUND CONDUCTORS THROUGH PULLBOX AS REQUIRED PER PLAN
6. PROVIDE 4' GROUND WIRE LOOP TO GROUND ALL METALLIC PULLBOX COMPONENTS. LABEL WIRE "PULLBOX GROUND LOOP". CADWELD 5' GREEN #4 TO GROUND LOOP AND TO COVERS
7. INSTALL NON-METALLIC LADDER ASSEMBLY IN PULLBOX ASSEMBLIES DEEPER THAN 4'-0", SEE X / XXXX (PL05-6)

PULLBOX WITH SIDE PENETRATIONS

NOT TO SCALE E02-3 030205

FOR RESERVOIR USE ONLY

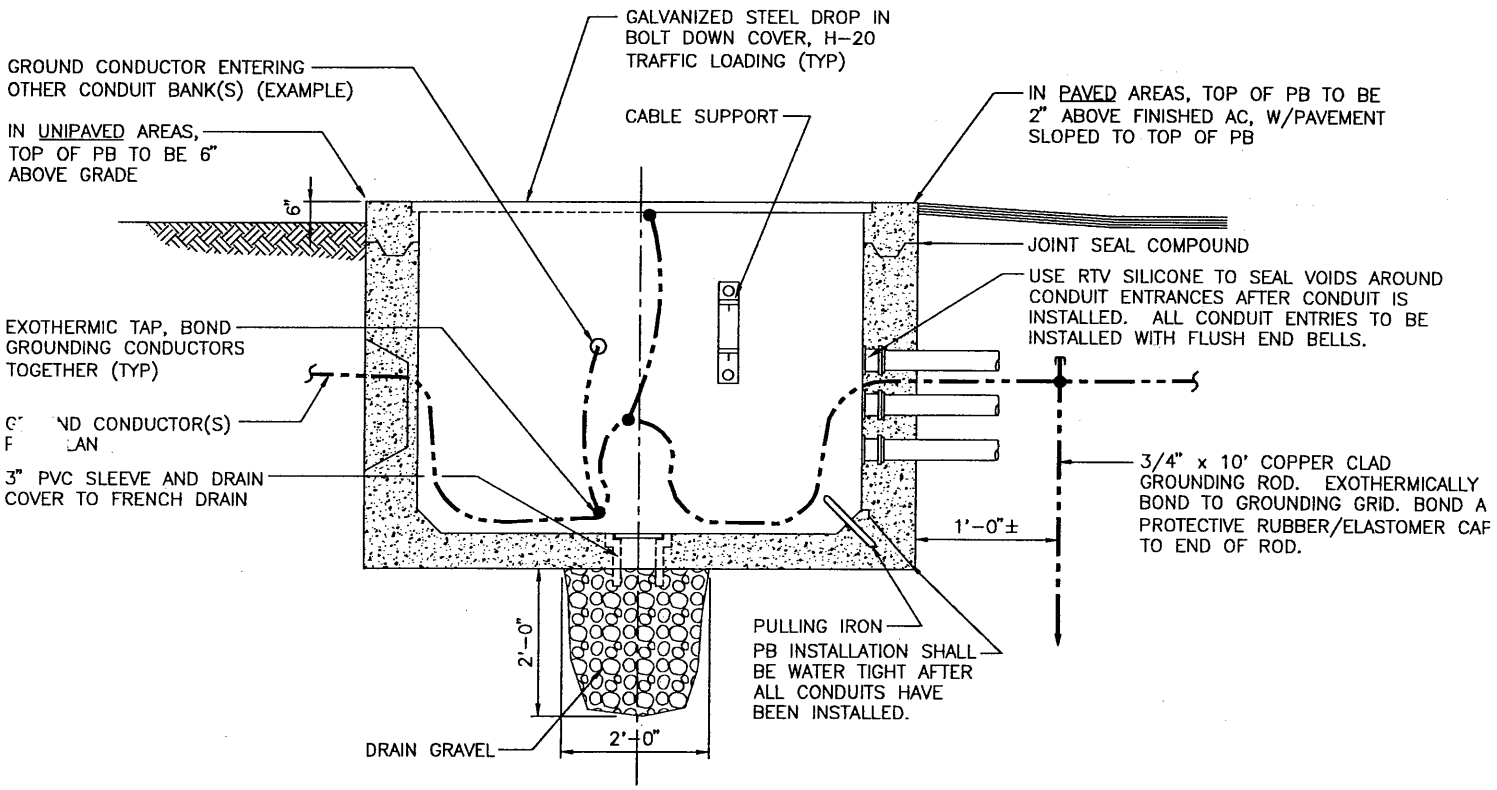

NOTE:
EXCAVATE AND BACKFILL (12" MIN) AROUND ALL SIDES AND BOTTOM OF PULLBOX PER SPECS SEC 02300.

PULLBOX DETAIL

NOT TO SCALE E02-3A 050704

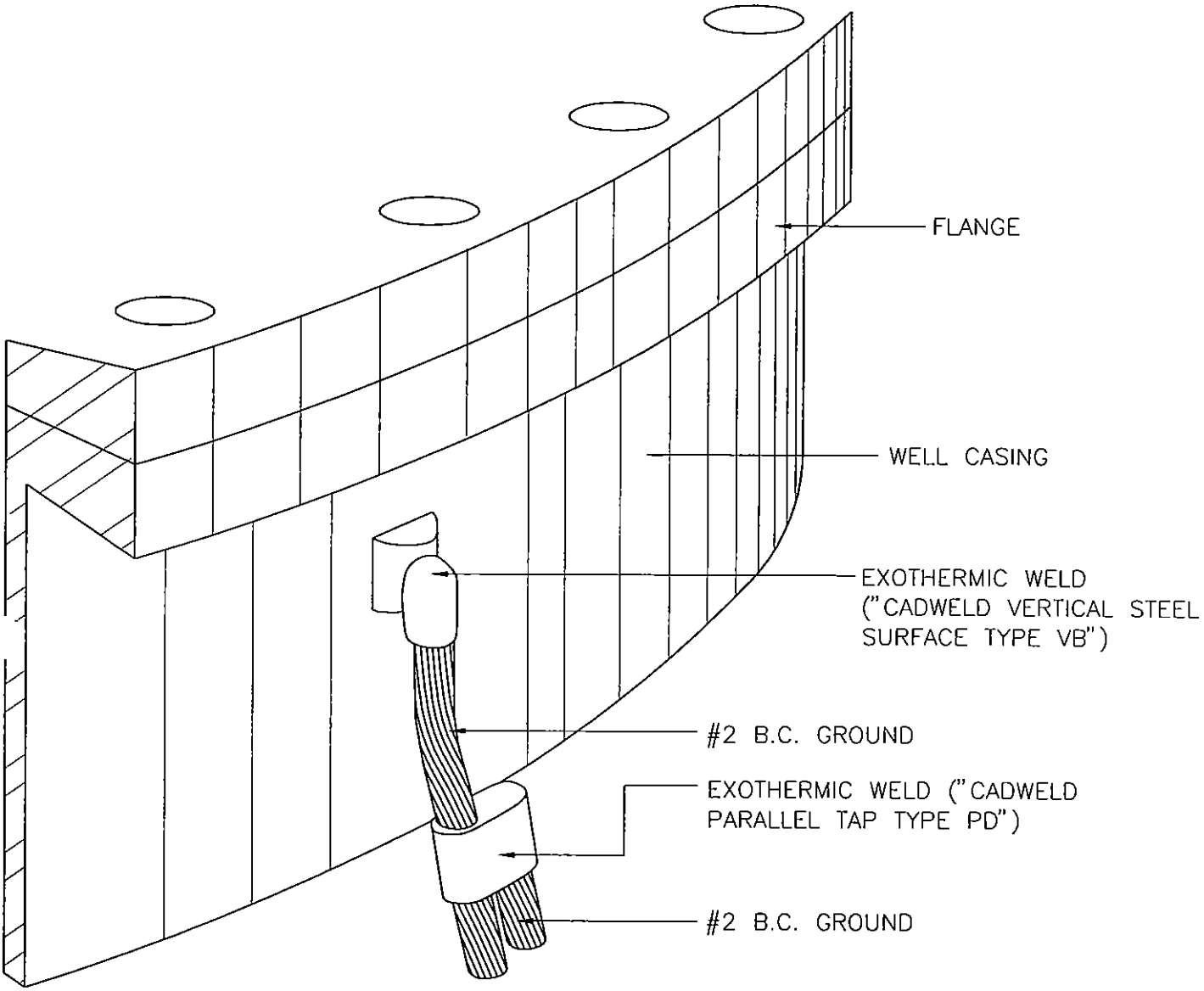

TYPICAL GROUNDING DETAIL AT WELL CASING

NOT TO SCALE E02-4 070103

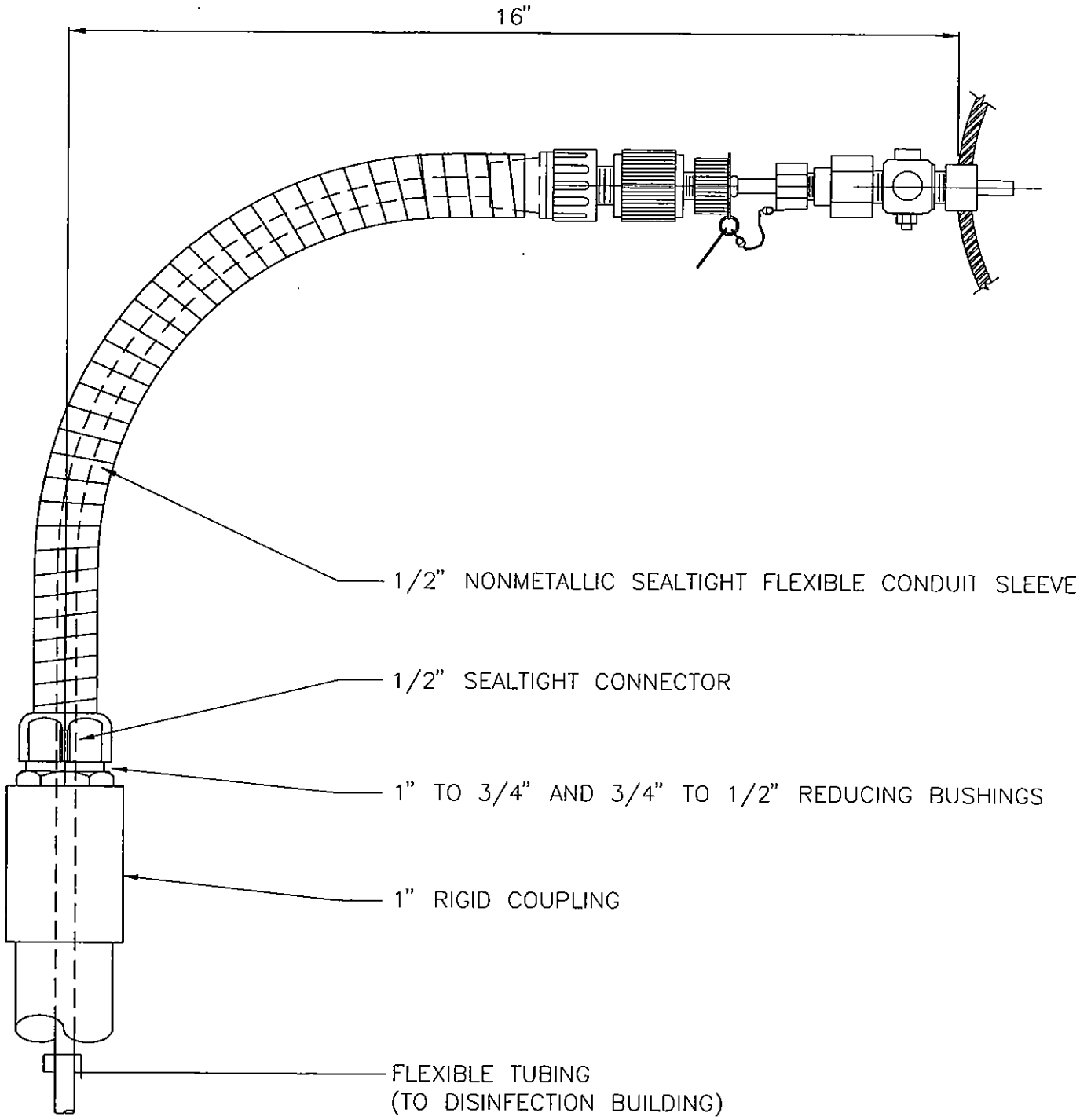

NOTE:
THIS SHALL BE THE ONLY APPLICATION WHERE NONMETALLIC LIQUIDTIGHT FLEXIBLE IS USED.

CONNECTION DETAIL AT WELL

NOT TO SCALE E02-5 072303

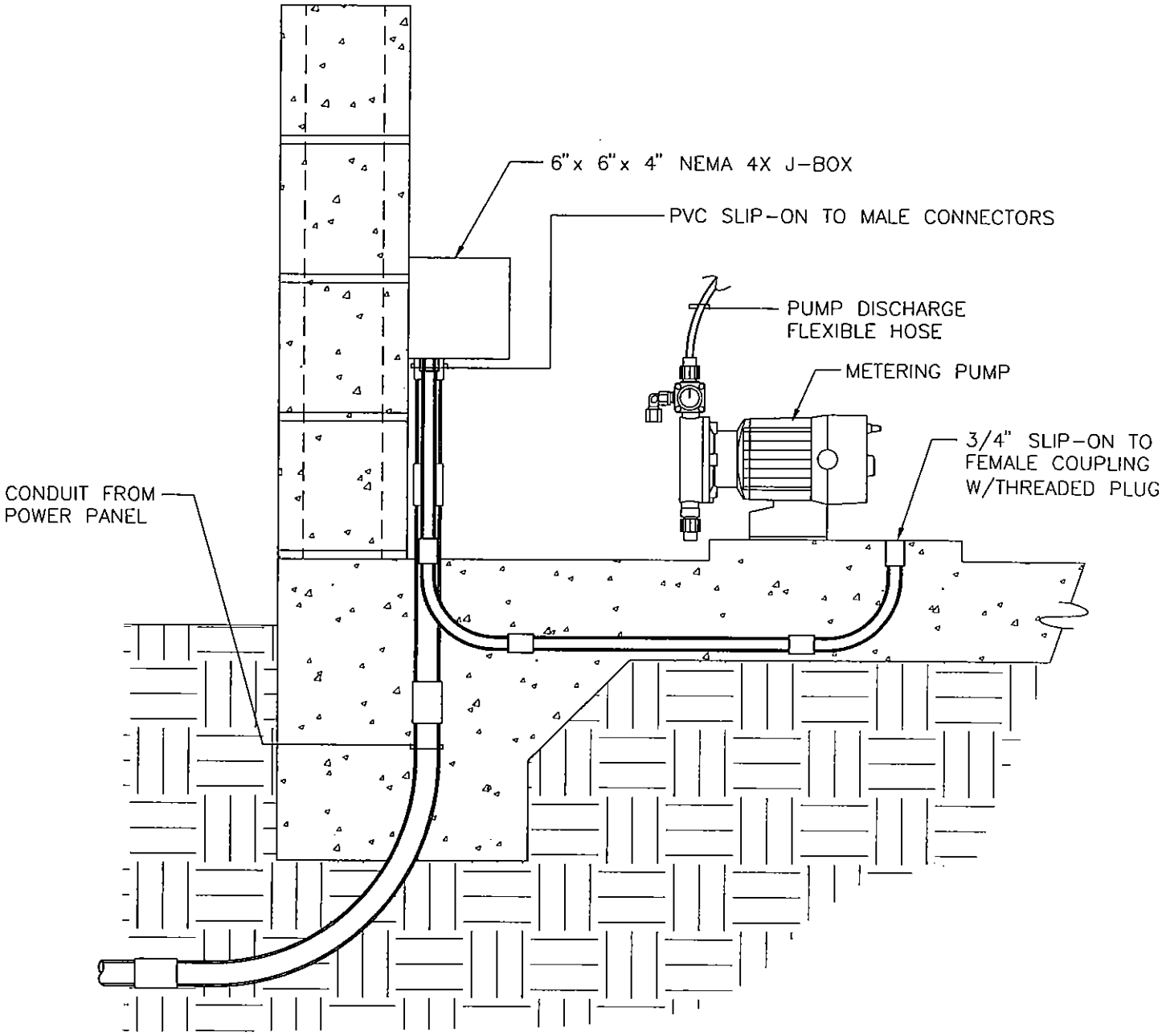

ELECTRICAL CONNECTION AT METERING PUMP

NOT TO SCALE

E02-6 072303

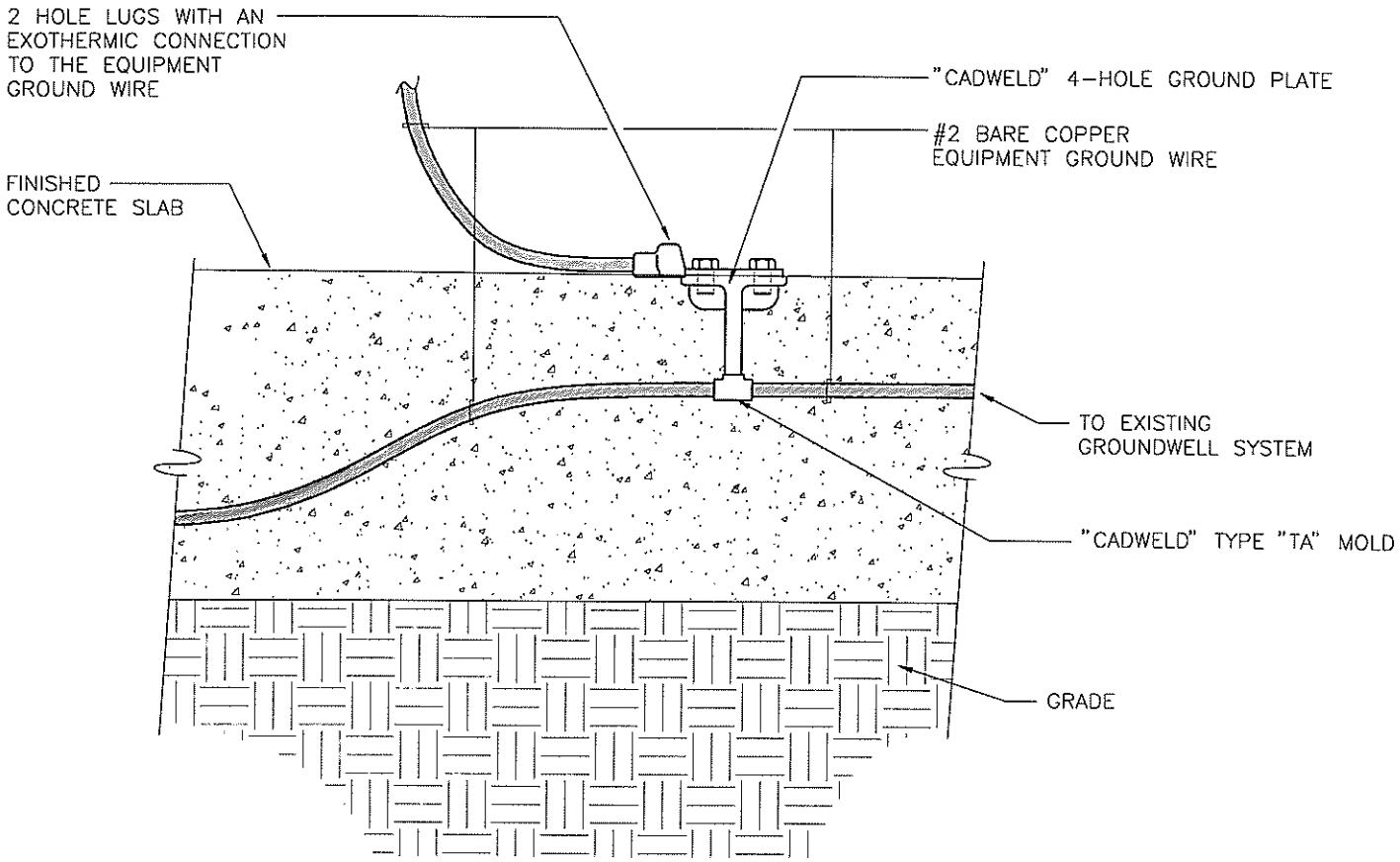

NOTES:

1. "CADWELD" #2 BARE COPPER EQUIPMENT GROUND TO THE GROUNDWELL 4/0 COPPER CABLE WHERE #2 WIRE PENETRATES THE CONCRETE SLAB

2. ALL GROUND PLATES ARE TO BE FLUSH WITH SURFACE PENETRATED SO AS TO NOT CAUSE A TRIPPING HAZARD. IF FOR ANY REASON THE GROUND PLATE IS NOT INSTALLED FLUSH THE CONTRACTOR SHALL BE REQUIRED AT HIS EXPENSE TO: JACK-HAMMER AND REPOUR CONCRETE; REMOVE AND REINSTALL MASONRY; PAINT; GROUT; RELOCATE EQUIPMENT; PROVIDE TEMPORARY FACILITIES.

EQUIPMENT GROUNDING PLATE DETAIL

NOT TO SCALE

E02-7 081206

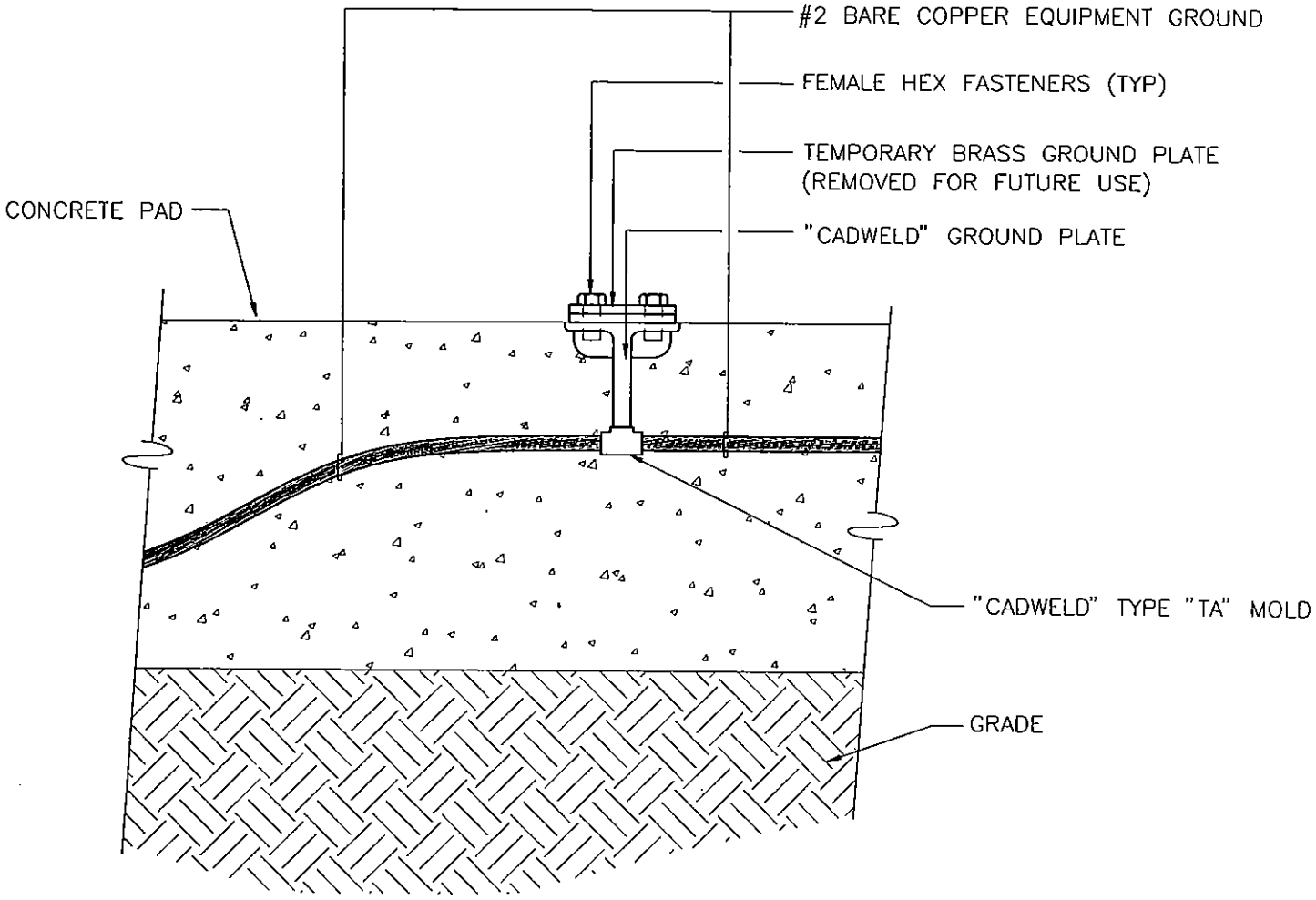

FUTURE EQUIPMENT GROUNDING PLATE DETAIL

NOT TO SCALE

E02-8 070103

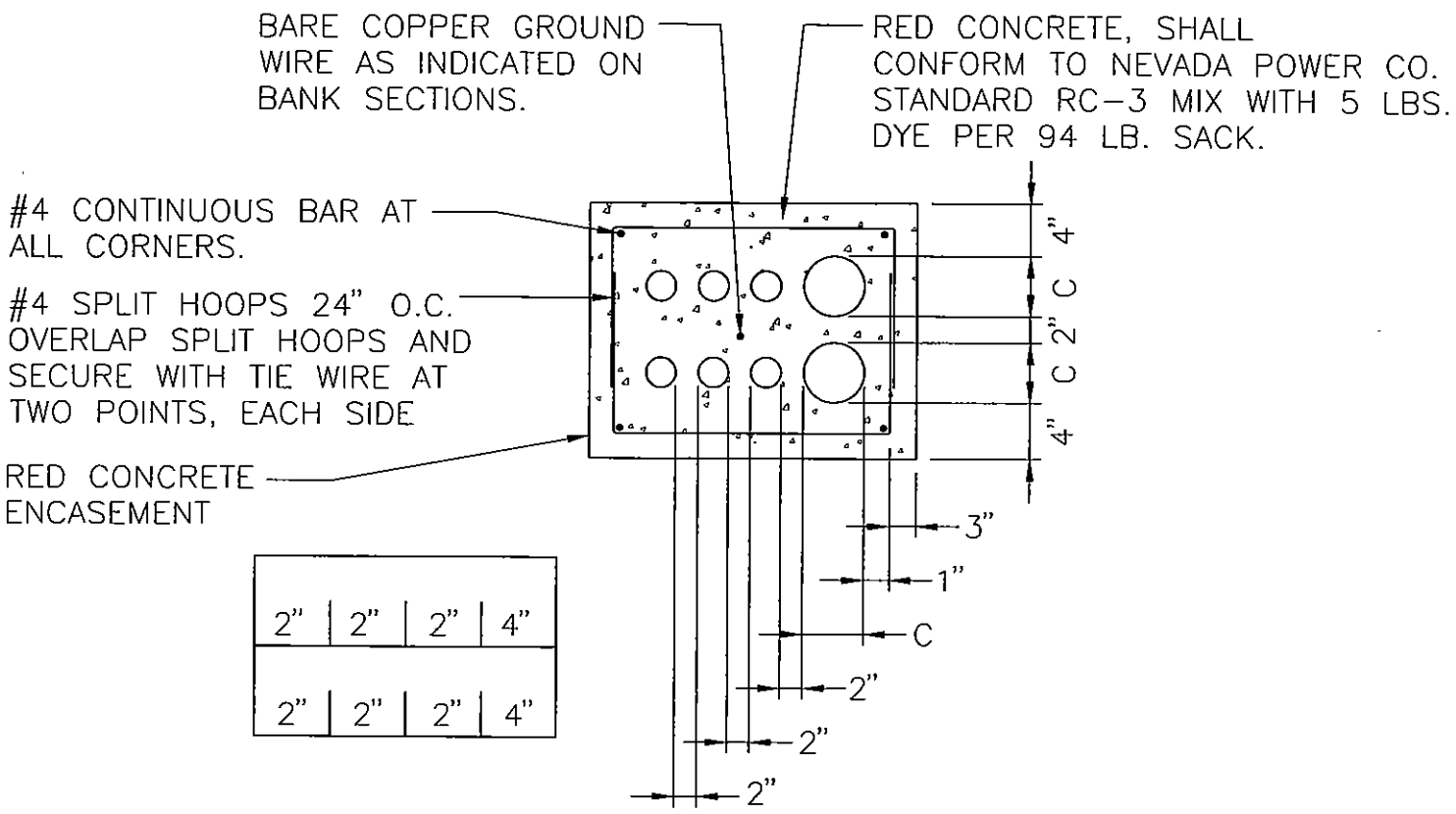

NOTE:
ACTUAL NUMBER AND SIZE OF CONDUITS MAY VARY FROM THIS DETAIL. REFER TO PLANS FOR ACTUAL NUMBER AND SIZE OF CONDUITS.

TYPICAL CONDUIT BANK DETAIL

NOT TO SCALE E02-9 070103

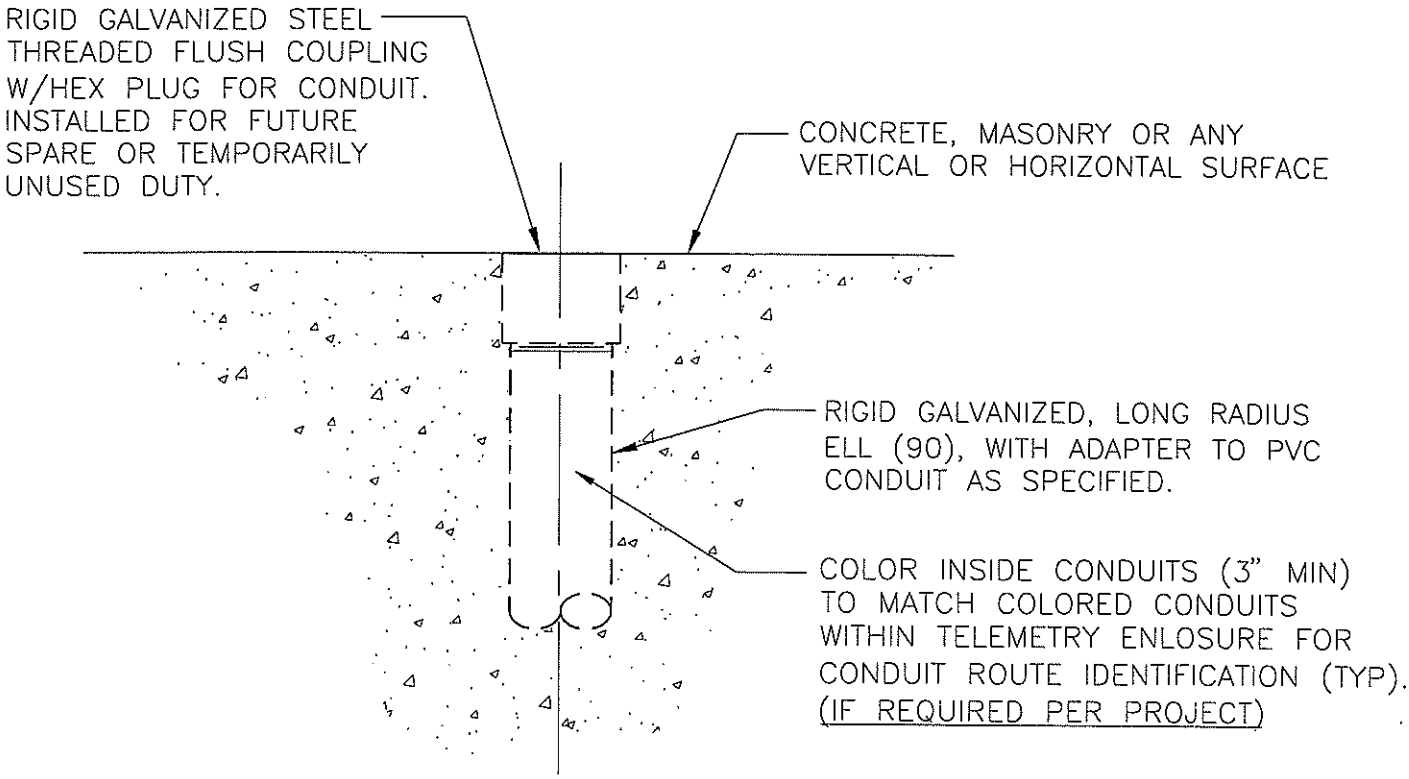

ALL HEX PLUGS ARE TO BE FLUSH WITH SURFACE PENETRATED. SPARE CONDUITS (OR TEMPORARILY UNUSED CONDUITS) SHALL BE THREADED WITH A HEX FLUSH PLUG INSTALLED SO AS TO NOT CAUSE A TRIP HAZARD OR ALLOW THE INFILTRATION OF CONTAMINANTS INTO THE CONDUIT. IF FOR ANY REASON THE CONDUIT IS NOT FLUSH WITH THE SURFACE PENETRATED THE CONTRACTOR SHALL EITHER CUT OFF OR EXTEND THE CONDUIT TO FULFILL THE FINISHED FLUSH REQUIREMENT. AS A MINIMUM, TO CORRECT ANY FLUSH PLUG CONDUIT INSTALLATIONS THE CONTRACTOR MAY BE REQUIRED AT HIS EXPENSE TO: JACK–HAMMER AND REPOUR CONCRETE; REMOVE AND REINSTALL MASONRY; REFINISH GYPSUM; PAINT; GROUT; RELOCATE EQUIPMENT; PROVIDE TEMPORARY FACILITIES; REROUTE CONDUITS.

CONDUIT RISER

NOT TO SCALE E03–1 080106

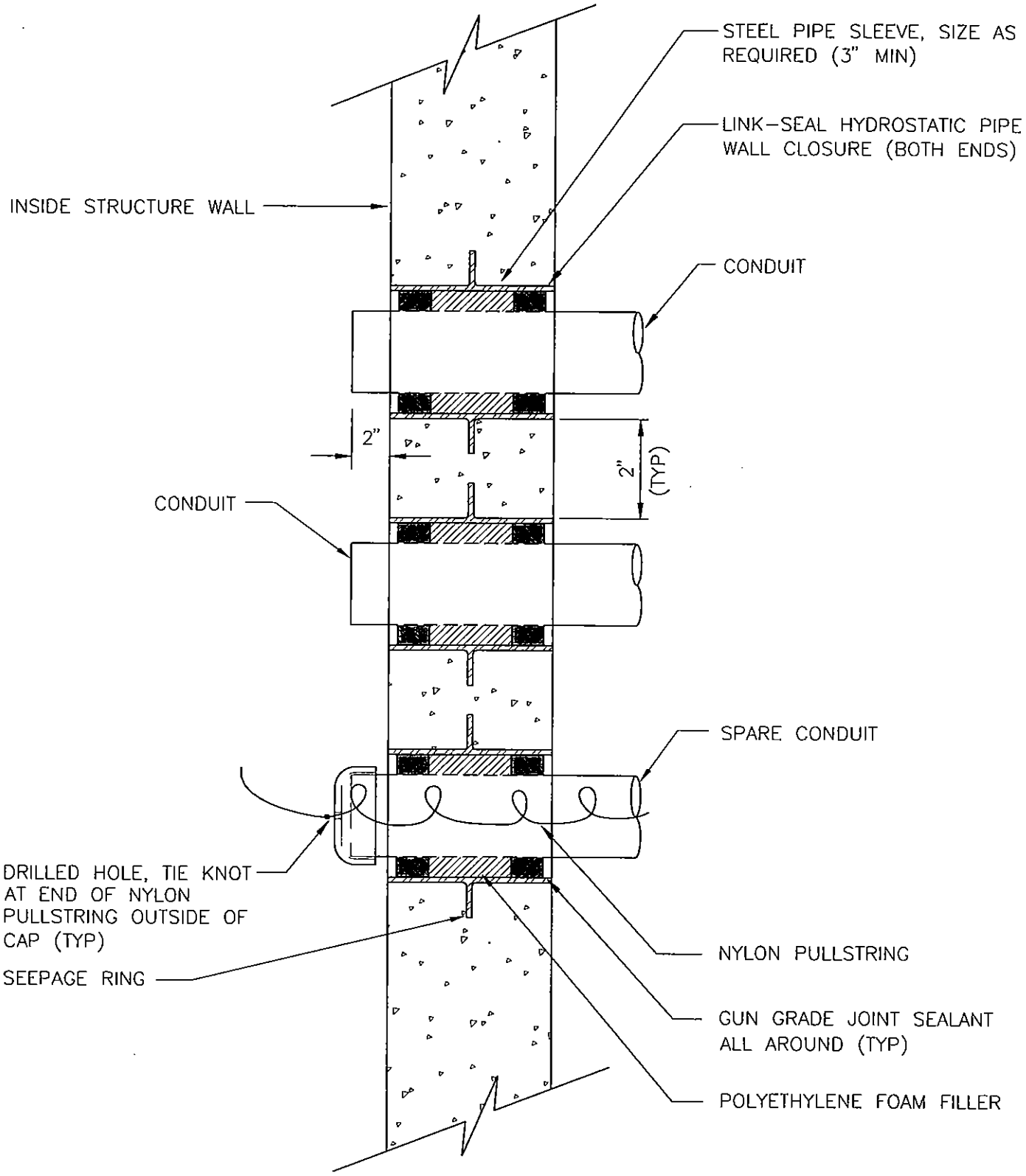

VAULT WALL CONDUIT PENETRATION DETAIL

NOT TO SCALE

E03-2 070103

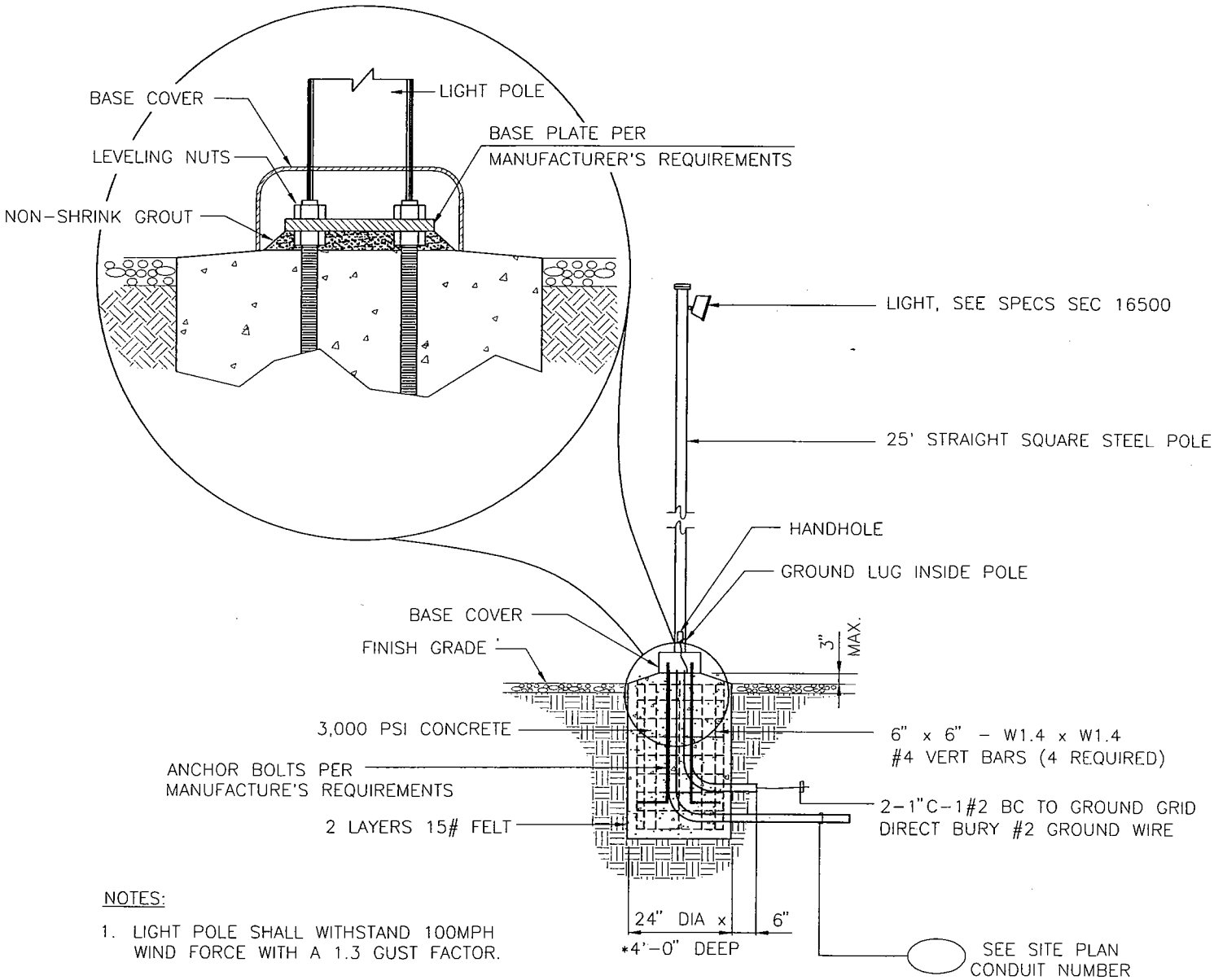

NOTES:

1. LIGHT POLE SHALL WITHSTAND 100MPH WIND FORCE WITH A 1.3 GUST FACTOR.

* 2. DIMENSIONS ARE SUPERSEDED BY THE MANUFACTURER'S REQUIREMENTS

ON-SITE LIGHT POLE AND BASE DETAIL

NOT TO SCALE

E03-3 090304

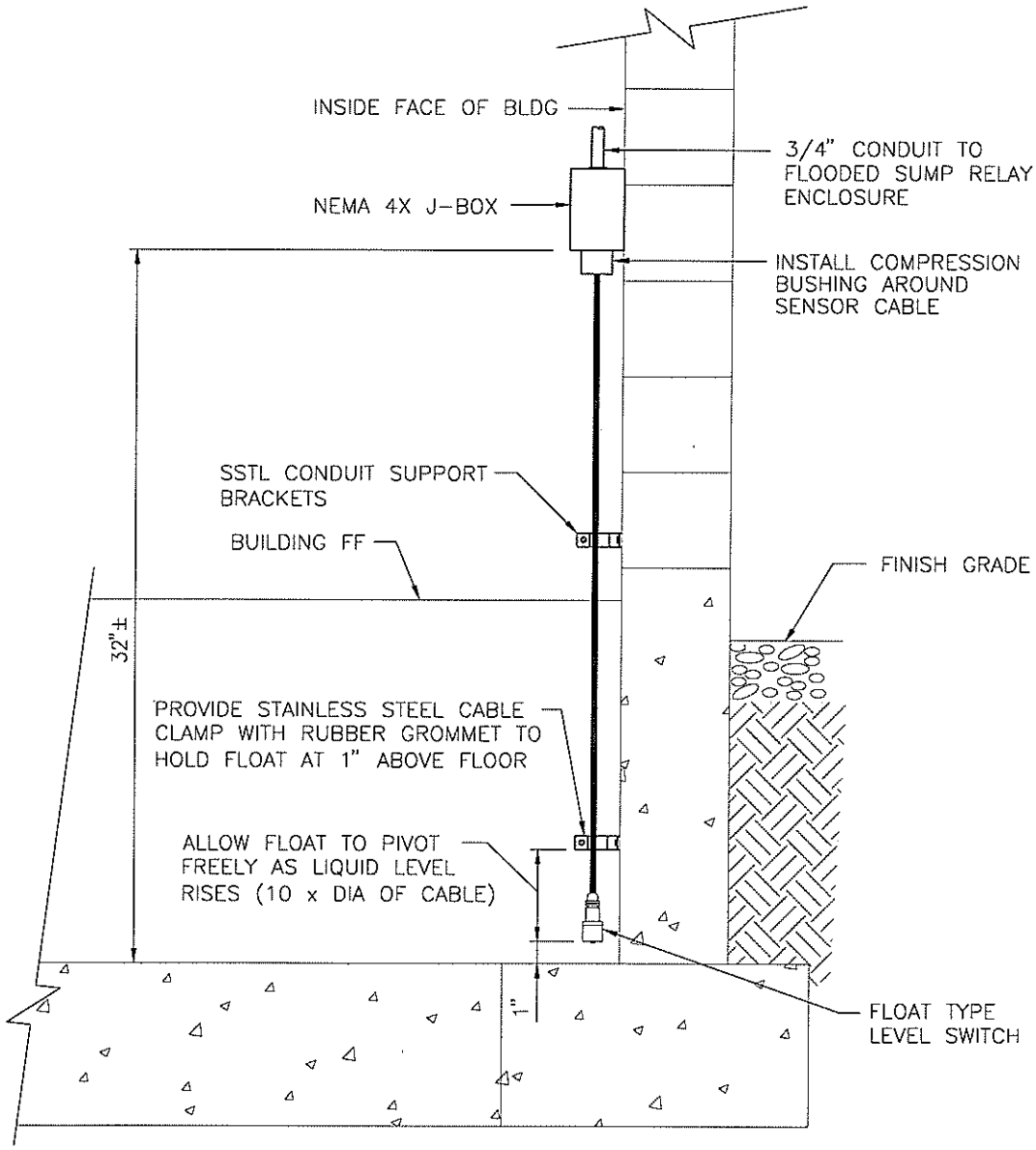

LIQUID LEVEL SWITCH INSTALLATION

NOT TO SCALE E04-1 100605

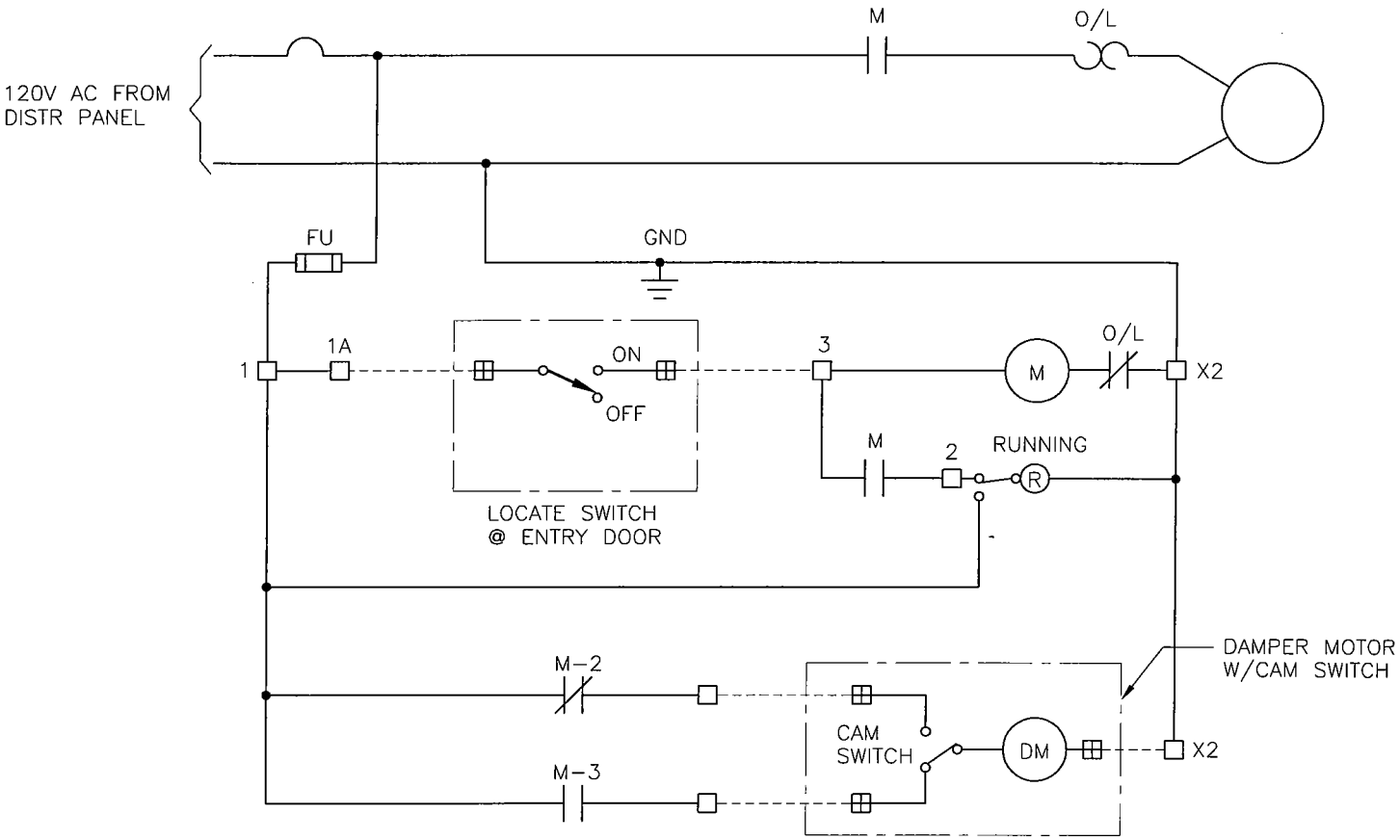

NOTE:
CONTRACTOR TO SIZE AND PROVIDE MOTOR STARTER
TO ACCOMMODATE SHOW CIRCUITRY.

DISINFECTION ROOM EXHAUST FAN

NOT TO SCALE E04-2 080304

FOR REFERENCE ONLY

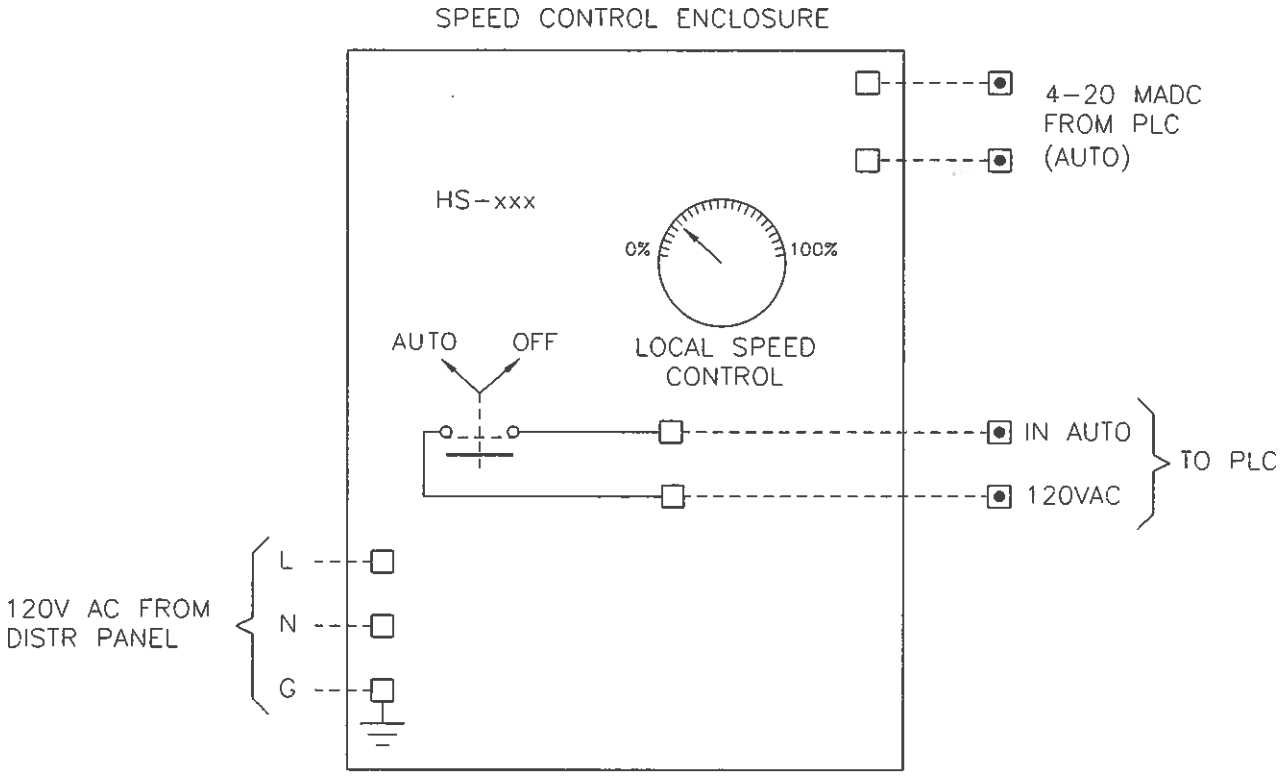

METERING PUMP

NOT TO SCALE E04-3 062207

FOR REFERENCE ONLY

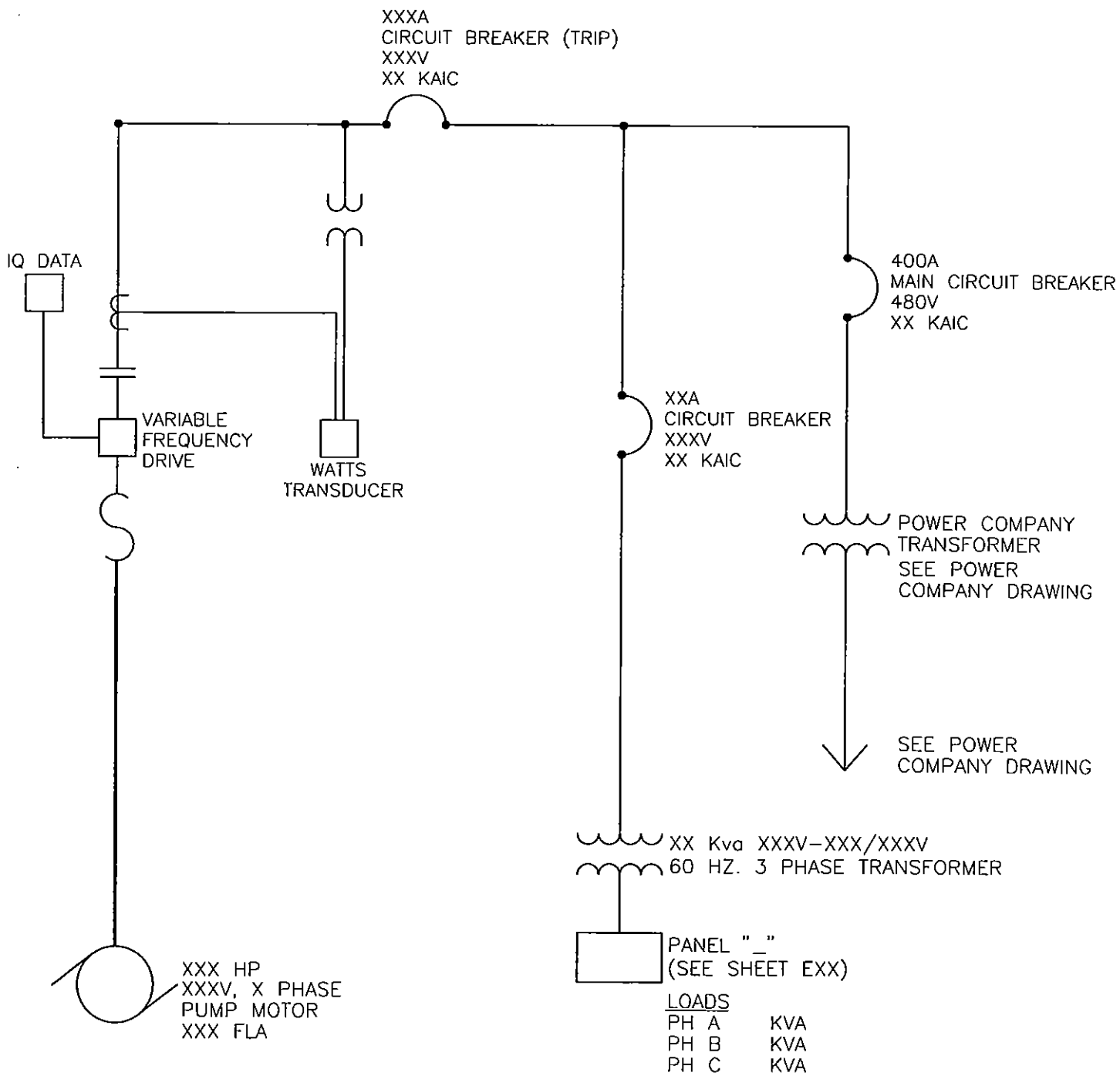

SINGLE LINE DIAGRAM

NOT TO SCALE E04-4 070103

FOR REFERENCE ONLY

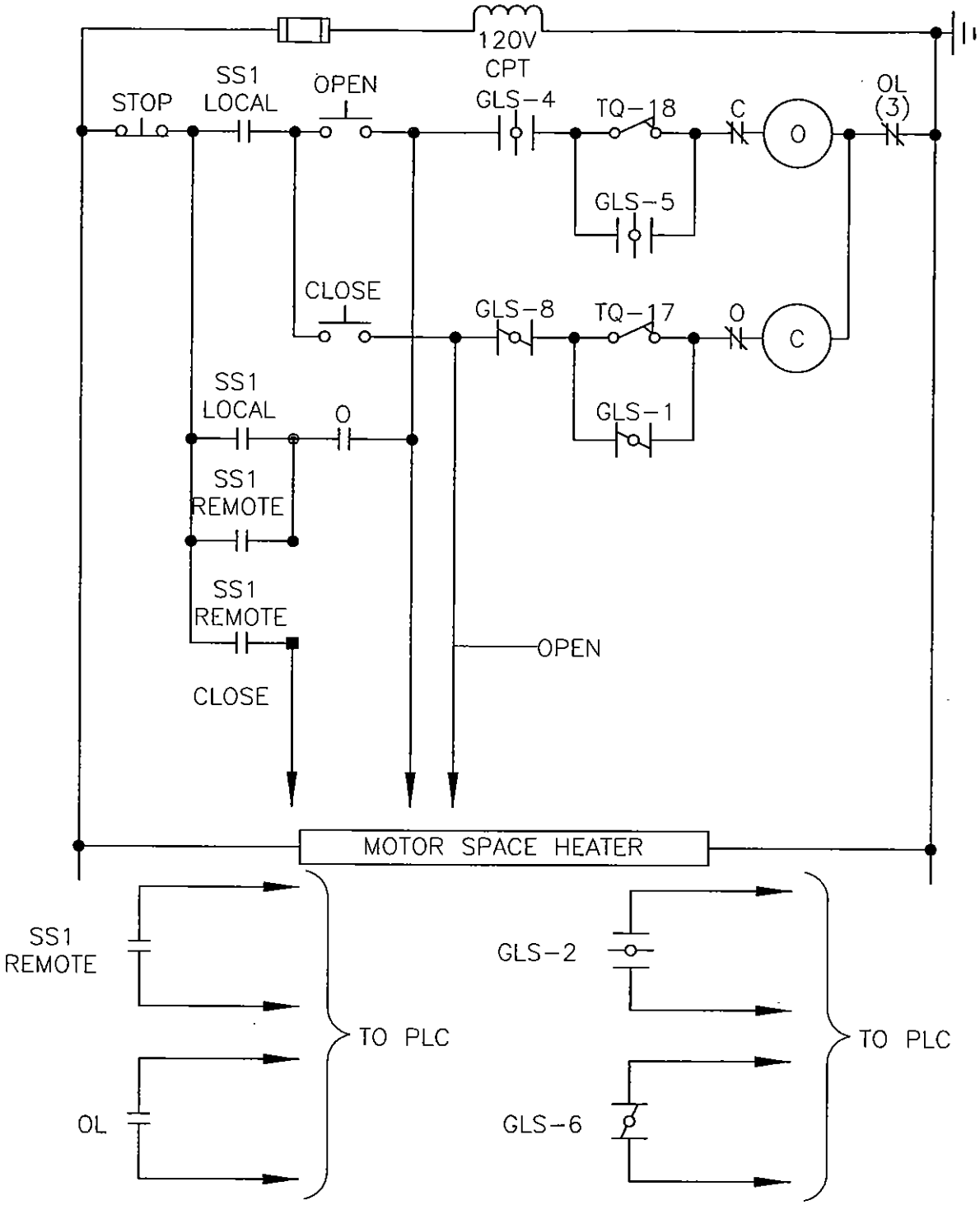

BUTTERFLY M.O.V. DIAGRAM

NOT TO SCALE E04-5 070103

FOR REFERENCE ONLY

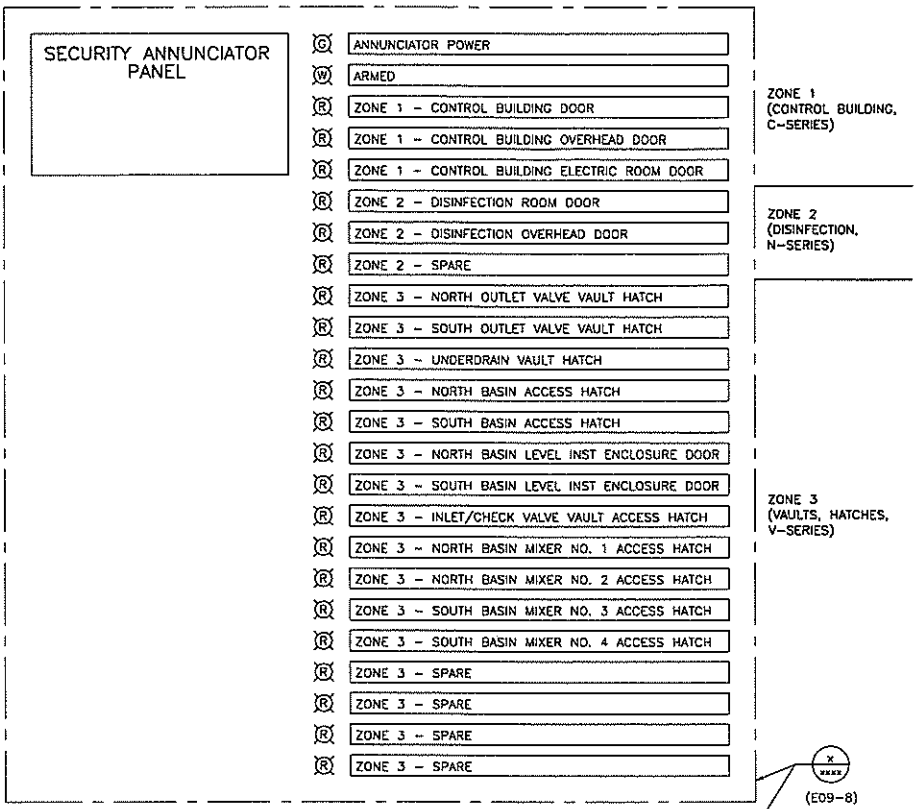

SECURITY ANNUNCIATOR MATERIALS
IDEC RELAY RH3BU-DC24V, WITH 3 FORM "C" CONTACTS AND 24VDC COIL (ONE PER DOOR/VAULT/HATCH AND KEY SWITCH)
IDEC RELAY RH1BU-DC24V, WITH 1 FORM "C" CONTACT AND 24VDC COIL, ONE PER ZONE, FOR 120V PLC I/O ISOLATION (GROUP ALL PLC ISOLATION RELAYS TOGETHER AND ISOLATE 120VAC WIRING FROM 24VDC WIRING)
BASE AND DIN RAIL, SUITABLE FOR RELAYS LISTED ABOVE
DIN RAIL MOUNTED TERMINALS, 600V TUBULAR CLAMP TYPE, REFER TO SPECIFICATIONS
HIGH BRIGHTNESS LED, COLOR AS INDICATED ON PANEL, IDI 2191LS (G) AND IDI 2191L1 (R)
NAMEPLATES, ENGRAVED, IN ACCORDANCE WITH SPECIFICATIONS
HOFFMAN ENCLOSURE, NEMA TYPE 12, HINGED, WITH BACK PANEL – 24" x 16" x 6" (MIN)

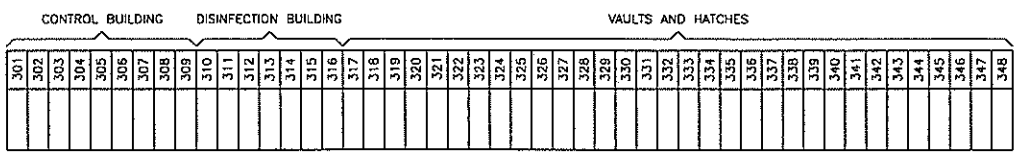

SECURITY CABINET INTERFACE TERMINAL BLOCK

SECURITY ANNUNCIATOR PANEL II

NOT TO SCALE E04-6 012507

FOR REFERENCE ONLY

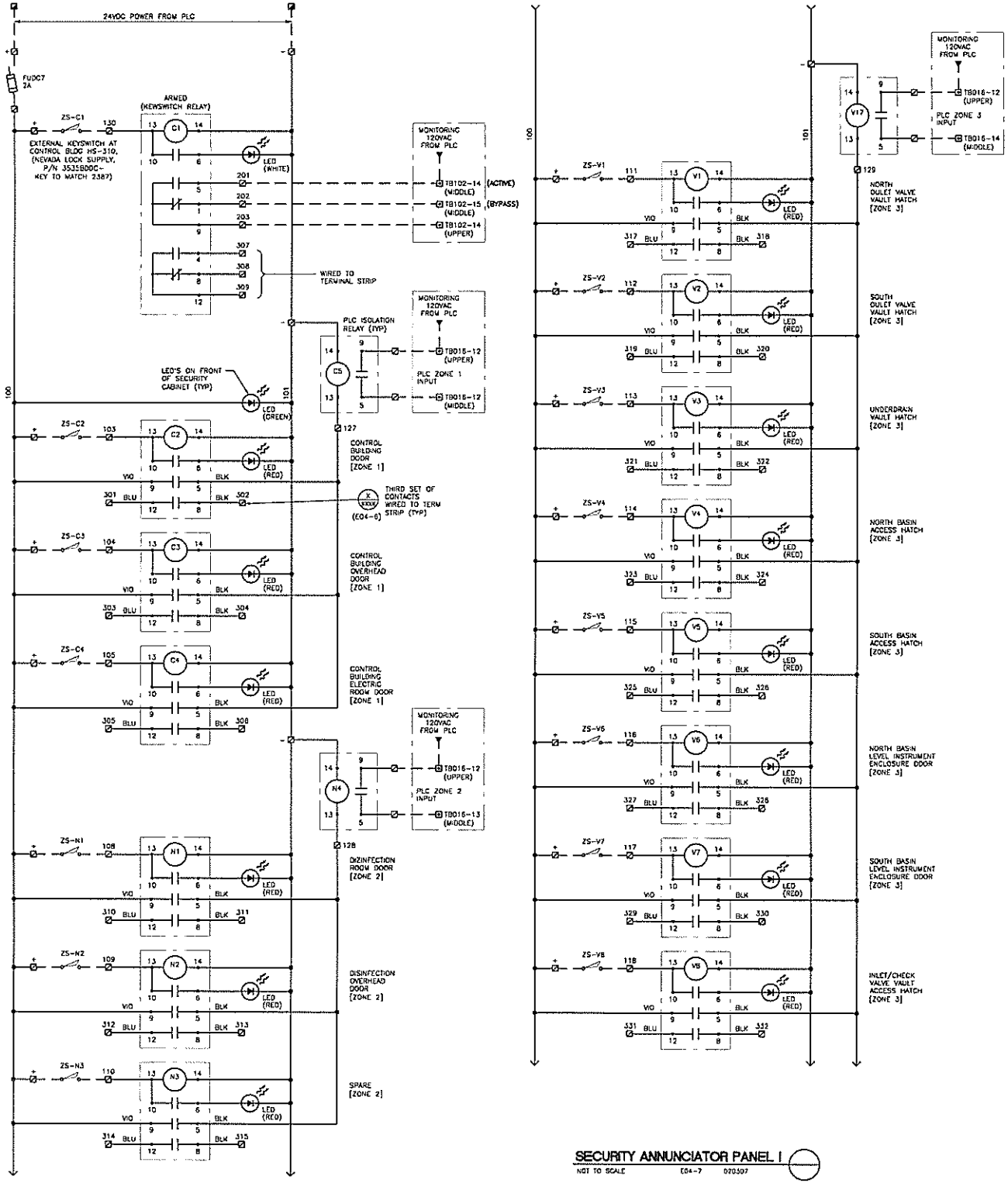

SECURITY ANNUNCIATOR PANEL I

NOT TO SCALE EQ4-7 020507

FOR REFERENCE ONLY

PANEL

PANEL NO. ____ MAINS ____ MAIN BKR ____ SURFACE ☐ FLUSH ☐ INDOOR ☐ OUTDOOR ☐ VOLTS 208/120 PHASE 3
WIRE 4 GROUND SOLID NEUTRAL FULL MIN KAIC 10 RMS SYM DOOR: HINGED ☒ DOOR-IN-DOOR ☒
LATCH/LOCK ☒ SVC ENT ☐ BUS: ALUM. ☐ COPPER ☒ BREAKERS: SLIP-ON ☐ BOLT-ON ☒ SITE LOCATION ____

CKT	DESCRIPTION	LT.	REC	MIS	BKR	WATTS A	WATTS B	WATTS C		WATTS A	WATTS B	WATTS C	BKR	LT.	REC	MIS	DESCRIPTION	CKT
1	XXXX				X XX	XXXX				XXXX			X XX				LIGHTING	2
3	XXXX				X XX		XXXX				XXXX		X XX				XXXX	4
5	RECEPTACLES				X XX			XXXX				XXXX	X XX				XXXX	6
7	XXXX				X XX	XXXX				XXXX			X XX				XXXX	8
9	XXXX				X XX		XXXX				XXXX		X XX				XXXX	10
11	XXXX				X XX			XXXX				XXXX	X XX				XXXX	12
13	XXXX				X XX	XXXX				XXXX			X XX				XXXX	14
15	XXXX				X XX		XXXX				XXXX		X XX				XXXX	16
17	XXXX				X XX			XXXX				XXXX	X XX				XXXX	18
19	XXXX				X XX	XXXX				XXXX			X XX				XXXX	20
21	XXXX				X XX		XXXX				XXXX		X XX				XXXX	22
23	XXXX				X XX			XXXX				XXXX	X XX				XXXX	24
25	XXXX				X XX	XXXX				XXXX			X XX				XXXX	26
27	XXXX				X XX		XXXX				XXXX		X XX				XXXX	28
29	XXXX				X XX			XXXX				XXXX	X XX				XXXX	30
31	XXXX				X XX	XXXX				XXXX			X XX				XXXX	32
33	XXXX				X XX		XXXX				XXXX		X XX				XXXX	34
35	XXXX				X XX			XXXX				XXXX	X XX				XXXX	36
37	XXXX				X XX	XXXX				XXXX			X XX				XXXX	38
39	XXXX				X XX		XXXX				XXXX		X XX				XXXX	40
41	XXXX				X XX			XXXX				XXXX	X XX				XXXX	42
43	XXXX				X XX	XXXX				XXXX			X XX				XXXX	44
45	XXXX				X XX		XXXX				XXXX		X XX				XXXX	46
47	XXXX				X XX			XXXX				XXXX	X XX				XXXX	48
						XXXX	XXXX	XXXX		XXXX	XXXX	XXXX						

208/120V DISTRIBUTION PANEL

NOT TO SCALE E05-1A 100605

PANEL

PANEL NO. ____ MAINS ____ MAIN BKR ____ SURFACE ☐ FLUSH ☐ INDOOR ☐ OUTDOOR ☐ VOLTS 208/120 PHASE 3
WIRE 4 GROUND SOLID NEUTRAL FULL MIN KAIC 10 RMS SYM DOOR: HINGED ☒ DOOR-IN-DOOR ☒
LATCH/LOCK ☒ SVC ENT ☐ BUS: ALUM. ☐ COPPER ☒ BREAKERS: SLIP-ON ☐ BOLT-ON ☒ SITE LOCATION ____

CKT	DESCRIPTION	LT.	REC	MIS	BKR	WATTS A	WATTS B	WATTS C		WATTS A	WATTS B	WATTS C	BKR	LT.	REC	MIS	DESCRIPTION	CKT
1	XXXX				X XX	XXXX				XXXX			X XX				XXXX	2
3	XXXX				X XX		XXXX				XXXX		X XX				XXXX	4
5	XXXX				X XX			XXXX				XXXX	X XX				XXXX	6
7	XXXX				X XX	XXXX				XXXX			X XX				XXXX	8
9	XXXX				X XX		XXXX				XXXX		X XX				XXXX	10
11	XXXX				X XX			XXXX				XXXX	X XX				XXXX	12
13	XXXX				X XX	XXXX				XXXX			X XX				XXXX	14
15	XXXX				X XX		XXXX				XXXX		X XX				XXXX	16
17	XXXX				X XX			XXXX				XXXX	X XX				XXXX	18
19	XXXX				X XX	XXXX				XXXX			X XX				XXXX	20
21	XXXX				X XX		XXXX				XXXX		X XX				XXXX	22
23	XXXX				X XX			XXXX				XXXX	X XX				XXXX	24
25	XXXX				X XX	XXXX				XXXX			X XX				XXXX	26
27	XXXX				X XX		XXXX				XXXX		X XX				XXXX	28
29	XXXX				X XX			XXXX				XXXX	X XX				XXXX	30
31	XXXX				X XX	XXXX				XXXX			X XX				XXXX	32
33	XXXX				X XX		XXXX				XXXX		X XX				XXXX	34
35	XXXX				X XX			XXXX				XXXX	X XX				XXXX	36
37	XXXX				X XX	XXXX				XXXX			X XX				XXXX	38
39	XXXX				X XX		XXXX				XXXX		X XX				XXXX	40
41	XXXX				X XX			XXXX				XXXX	X XX				XXXX	42
43	XXXX				X XX	XXXX				XXXX			X XX				XXXX	44
45	XXXX				X XX		XXXX				XXXX		X XX				XXXX	46
47	XXXX				X XX			XXXX				XXXX	X XX				XXXX	48
						XXXX	XXXX	XXXX		XXXX	XXXX	XXXX						

208/120V DISTRIBUTION PANEL

NOT TO SCALE E05-1A 092104

PANEL

PANEL NO. ____ MAINS _____ MAIN BKR _____ SURFACE ☐ FLUSH ☐ INDOOR ☐ OUTDOOR ☐ VOLTS 240/120 PHASE 1
WIRE 3 GROUND SOLID NEUTRAL FULL MIN KAIC 10 RMS SYM DOOR: HINGED ☒ DOOR-IN-DOOR ☒
LATCH/LOCK ☒ SVC ENT ☐ BUS: ALUM. ☐ COPPER ☒ BREAKERS: SLIP-ON ☐ BOLT-ON ☒ SITE LOCATION _____

CKT	DESCRIPTION	LT.	REC	MIS	BKR	WATTS L1	WATTS L2		WATTS L1	WATTS L2	BKR	LT.	REC	MIS	DESCRIPTION	CKT
1	XXXX				X XX	XXXX			XXXX		X XX				LIGHTING	2
3	XXXX				X XX		XXXX			XXXX	X XX				XXXX	4
5	RECEPTACLES				X XX	XXXX			XXXX		X XX				XXXX	6
7	XXXX				X XX		XXXX			XXXX	X XX				XXXX	8
9	XXXX				X XX	XXXX			XXXX		X XX				XXXX	10
11	XXXX				X XX		XXXX			XXXX	X XX				XXXX	12
13	XXXX				X XX	XXXX			XXXX		X XX				XXXX	14
15	XXXX				X XX		XXXX			XXXX	X XX				XXXX	16
17	XXXX				X XX	XXXX			XXXX		X XX				XXXX	18
19	XXXX				X XX		XXXX			XXXX	X XX				XXXX	20
21	XXXX				X XX	XXXX			XXXX		X XX				XXXX	22
23	XXXX				X XX		XXXX			XXXX	X XX				XXXX	24
25	XXXX				X XX	XXXX			XXXX		X XX				XXXX	26
27	XXXX				X XX		XXXX			XXXX	X XX				XXXX	28
29	XXXX				X XX	XXXX			XXXX		X XX				XXXX	30
31	XXXX				X XX		XXXX			XXXX	X XX				XXXX	32
33	XXXX				X XX	XXXX			XXXX		X XX				XXXX	34
35	XXXX				X XX		XXXX			XXXX	X XX				XXXX	36
37	XXXX				X XX	XXXX			XXXX		X XX				XXXX	38
39	XXXX				X XX		XXXX			XXXX	X XX				XXXX	40
41	XXXX				X XX	XXXX			XXXX		X XX				XXXX	42
43	XXXX				X XX		XXXX			XXXX	X XX				XXXX	44
45	XXXX				X XX	XXXX			XXXX		X XX				XXXX	46
47	XXXX				X XX		XXXX			XXXX	X XX				XXXX	48
						XXXX	XXXX		XXXX	XXXX						

120/240V DISTRIBUTION PANEL

NOT TO SCALE E05-1B 100605

CONDUIT, WIRE AND CABLE SCHEDULE

RACEWAY NO.	CONDUIT(S)	CONDUCTORS	FROM	TO	ROUTE VIA RACEWAY	ESTIMATED LENGTH		REMARKS
						CONDUIT	CA/WIRE	
1	1" CONDUIT	4#6 W/#10 GND	TRANSFORMER T3	DISTRIBUTION PANEL L1	XXXX	XXXX	XXXX	TRANSFORMER T3 SECONDARY
2	6-2" COND	XXXX	PULLBOX PB1	PULLBOX PB2	UNDERGRND CONDUIT	XXXX	XXXX	SEPARATE POWER AND INSTRUMENT CABLES
3	XXXX	XXXX	XXXX	XXXX	XXXX	XXXX	XXXX	XXXX
4	XXXX	XXXX	XXXX	XXXX	XXXX	XXXX	XXXX	XXXX
5	XXXX	XXXX	XXXX	XXXX	XXXX	XXXX	XXXX	XXXX
6	XXXX	XXXX	XXXX	XXXX	XXXX	XXXX	XXXX	XXXX
7	XXXX	XXXX	XXXX	XXXX	XXXX	XXXX	XXXX	XXXX
8	XXXX	XXXX	XXXX	XXXX	XXXX	XXXX	XXXX	XXXX
9	XXXX	XXXX	XXXX	XXXX	XXXX	XXXX	XXXX	XXXX
10	XXXX	XXXX	XXXX	XXXX	XXXX	XXXX	XXXX	XXXX
11	XXXX	XXXX	XXXX	XXXX	XXXX	XXXX	XXXX	XXXX
12	XXXX	XXXX	XXXX	XXXX	XXXX	XXXX	XXXX	XXXX
13	XXXX	XXXX	XXXX	XXXX	XXXX	XXXX	XXXX	XXXX
14	XXXX	XXXX	XXXX	XXXX	XXXX	XXXX	XXXX	XXXX
15	XXXX	XXXX	XXXX	XXXX	XXXX	XXXX	XXXX	XXXX
16	XXXX	XXXX	XXXX	XXXX	XXXX	XXXX	XXXX	XXXX
17	XXXX	XXXX	XXXX	XXXX	XXXX	XXXX	XXXX	XXXX
18	XXXX	XXXX	XXXX	XXXX	XXXX	XXXX	XXXX	XXXX
19	XXXX	XXXX	XXXX	XXXX	XXXX	XXXX	XXXX	XXXX
20	XXXX	XXXX	XXXX	XXXX	XXXX	XXXX	XXXX	XXXX
21	XXXX	XXXX	XXXX	XXXX	XXXX	XXXX	XXXX	XXXX
22	XXXX	XXXX	XXXX	XXXX	XXXX	XXXX	XXXX	XXXX
23	XXXX	XXXX	XXXX	XXXX	XXXX	XXXX	XXXX	XXXX
24	XXXX	XXXX	XXXX	XXXX	XXXX	XXXX	XXXX	XXXX
25	XXXX	XXXX	XXXX	XXXX	XXXX	XXXX	XXXX	XXXX
26	XXXX	XXXX	XXXX	XXXX	XXXX	XXXX	XXXX	XXXX
27	XXXX	XXXX	XXXX	XXXX	XXXX	XXXX	XXXX	XXXX
28	XXXX	XXXX	XXXX	XXXX	XXXX	XXXX	XXXX	XXXX
29	XXXX	XXXX	XXXX	XXXX	XXXX	XXXX	XXXX	XXXX
30	XXXX	XXXX	XXXX	XXXX	XXXX	XXXX	XXXX	XXXX
31	XXXX	XXXX	XXXX	XXXX	XXXX	XXXX	XXXX	XXXX
32	XXXX	XXXX	XXXX	XXXX	XXXX	XXXX	XXXX	XXXX
33	XXXX	XXXX	XXXX	XXXX	XXXX	XXXX	XXXX	XXXX
34	XXXX	XXXX	XXXX	XXXX	XXXX	XXXX	XXXX	XXXX
35	XXXX	XXXX	XXXX	XXXX	XXXX	XXXX	XXXX	XXXX
36	XXXX	XXXX	XXXX	XXXX	XXXX	XXXX	XXXX	XXXX
37	XXXX	XXXX	XXXX	XXXX	XXXX	XXXX	XXXX	XXXX
38	XXXX	XXXX	XXXX	XXXX	XXXX	XXXX	XXXX	XXXX
39	XXXX	XXXX	XXXX	XXXX	XXXX	XXXX	XXXX	XXXX
40	XXXX	XXXX	XXXX	XXXX	XXXX	XXXX	XXXX	XXXX
41	XXXX	XXXX	XXXX	XXXX	XXXX	XXXX	XXXX	XXXX
42	XXXX	XXXX	XXXX	XXXX	XXXX	XXXX	XXXX	XXXX
43	XXXX	XXXX	XXXX	XXXX	XXXX	XXXX	XXXX	XXXX
44	XXXX	XXXX	XXXX	XXXX	XXXX	XXXX	XXXX	XXXX
45	XXXX	XXXX	XXXX	XXXX	XXXX	XXXX	XXXX	XXXX
46	XXXX	XXXX	XXXX	XXXX	XXXX	XXXX	XXXX	XXXX
47	XXXX	XXXX	XXXX	XXXX	XXXX	XXXX	XXXX	XXXX
48	XXXX	XXXX	XXXX	XXXX	XXXX	XXXX	XXXX	XXXX
49	XXXX	XXXX	XXXX	XXXX	XXXX	XXXX	XXXX	XXXX
50	XXXX	XXXX	XXXX	XXXX	XXXX	XXXX	XXXX	XXXX
51	XXXX	XXXX	XXXX	XXXX	XXXX	XXXX	XXXX	XXXX
52	XXXX	XXXX	XXXX	XXXX	XXXX	XXXX	XXXX	XXXX
53	XXXX	XXXX	XXXX	XXXX	XXXX	XXXX	XXXX	XXXX
54	XXXX	XXXX	XXXX	XXXX	XXXX	XXXX	XXXX	XXXX
55	XXXX	XXXX	XXXX	XXXX	XXXX	XXXX	XXXX	XXXX
56	XXXX	XXXX	XXXX	XXXX	XXXX	XXXX	XXXX	XXXX
57	XXXX	XXXX	XXXX	XXXX	XXXX	XXXX	XXXX	XXXX

CONDUIT, WIRE AND CABLE SCHEDULE

NOT TO SCALE E05-2 100605

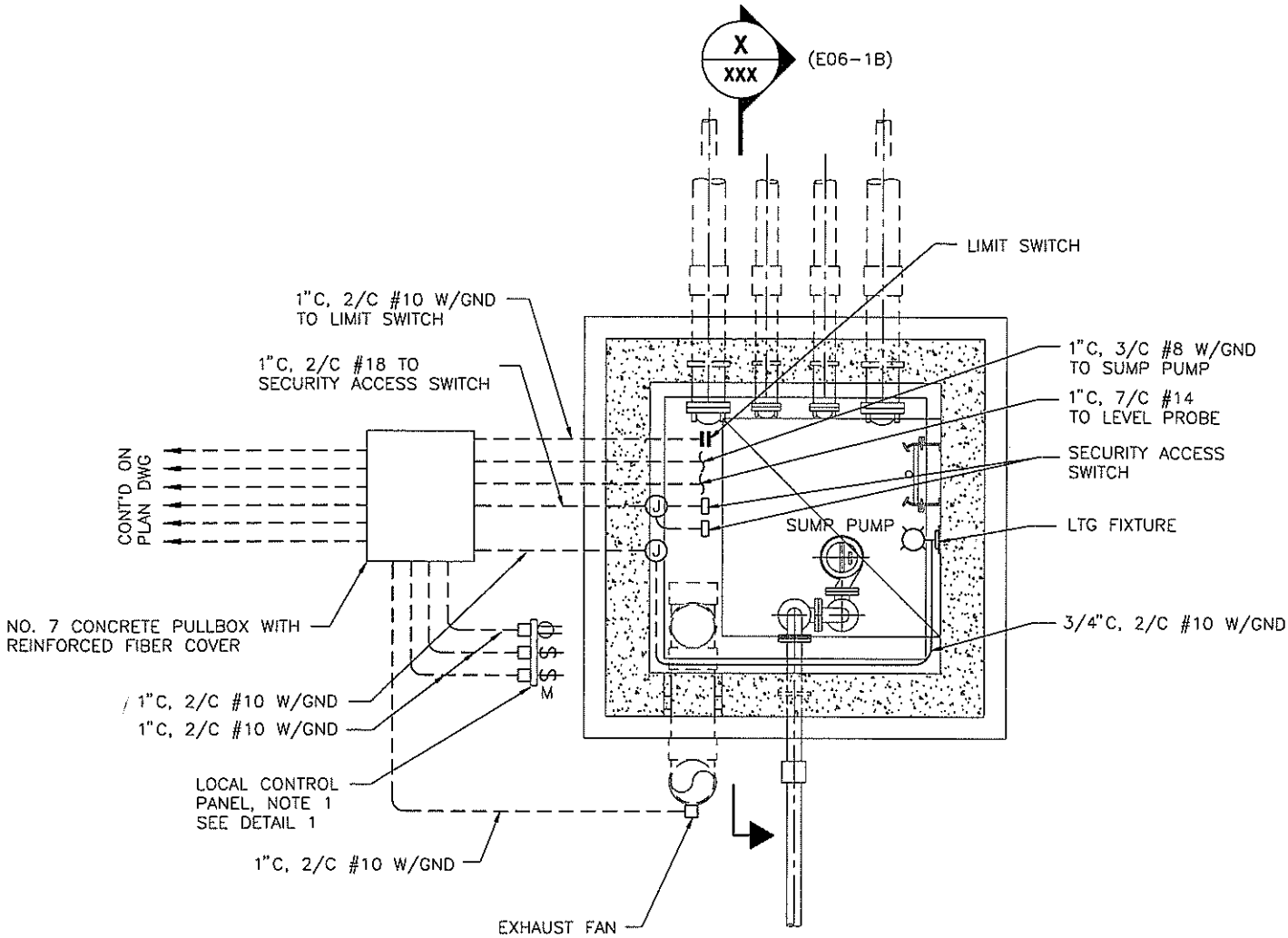

NOTES:

1. CONNECT LOCAL CONTROL PANEL (LCP) TO GROUND GRID. SPLICE MFG SUPPLIED SUMP PUMP CABLE IN LCP.

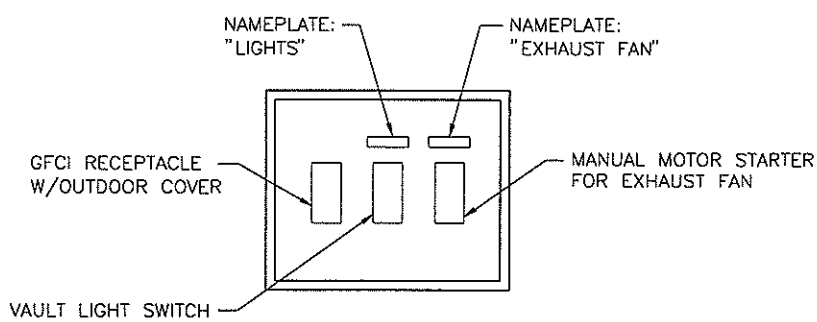

DESIGNER NOTE:
SEE DWG E10-1 AND E10-2 FOR DETAILS.

LOCAL CONTROL PANEL – DETAIL 1

VAULT PLAN

NOT TO SCALE. E06-1A 070606

FOR REFERENCE ONLY

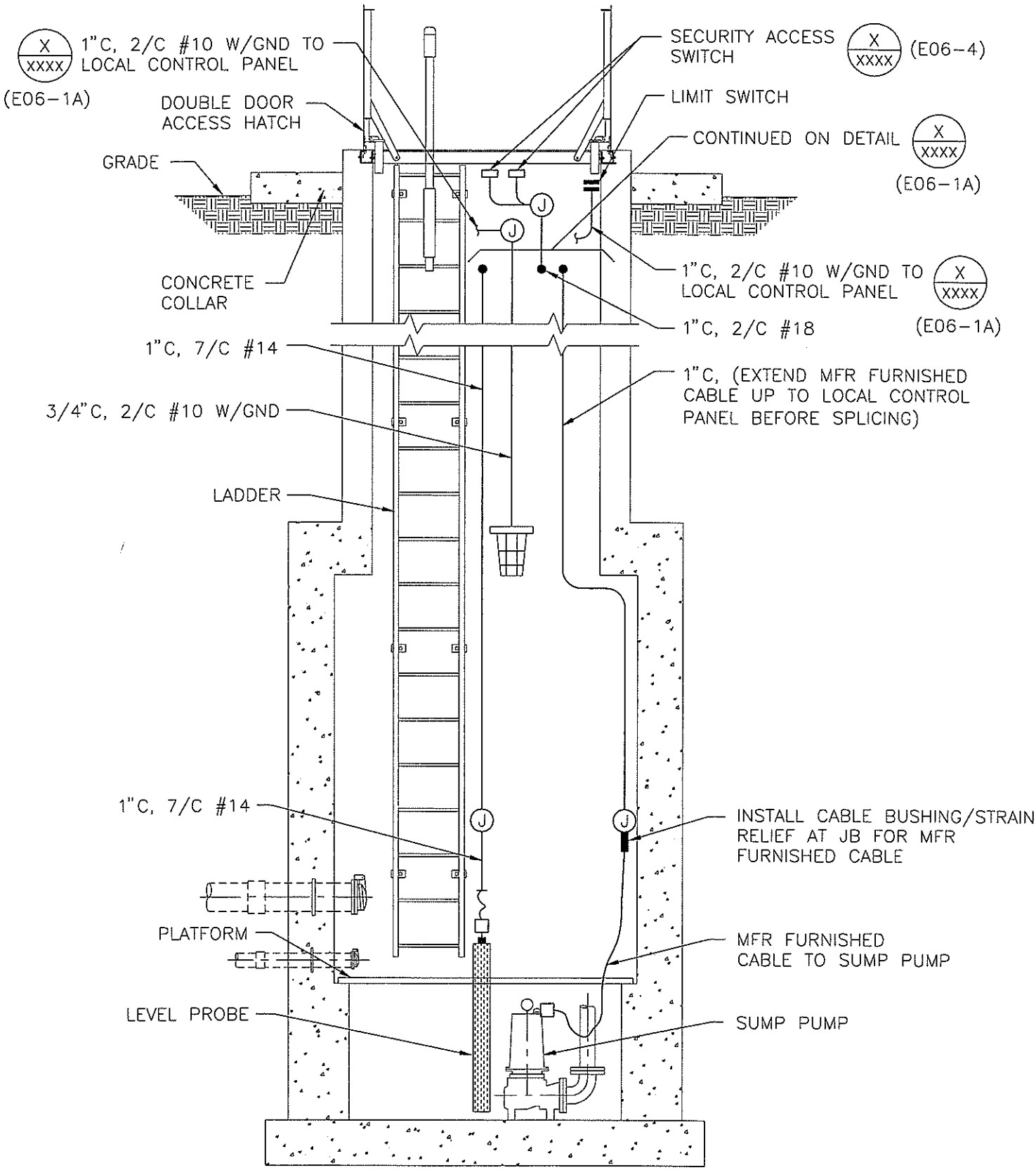

VAULT SECTION

NOT TO SCALE E06-1B 070606

FOR REFERENCE ONLY

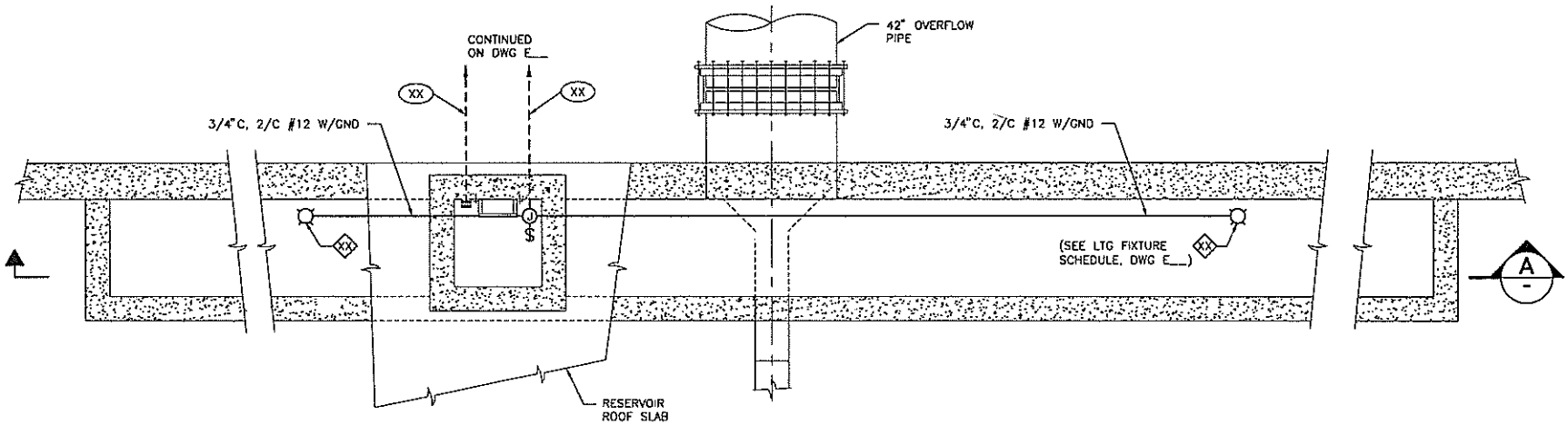

PLAN

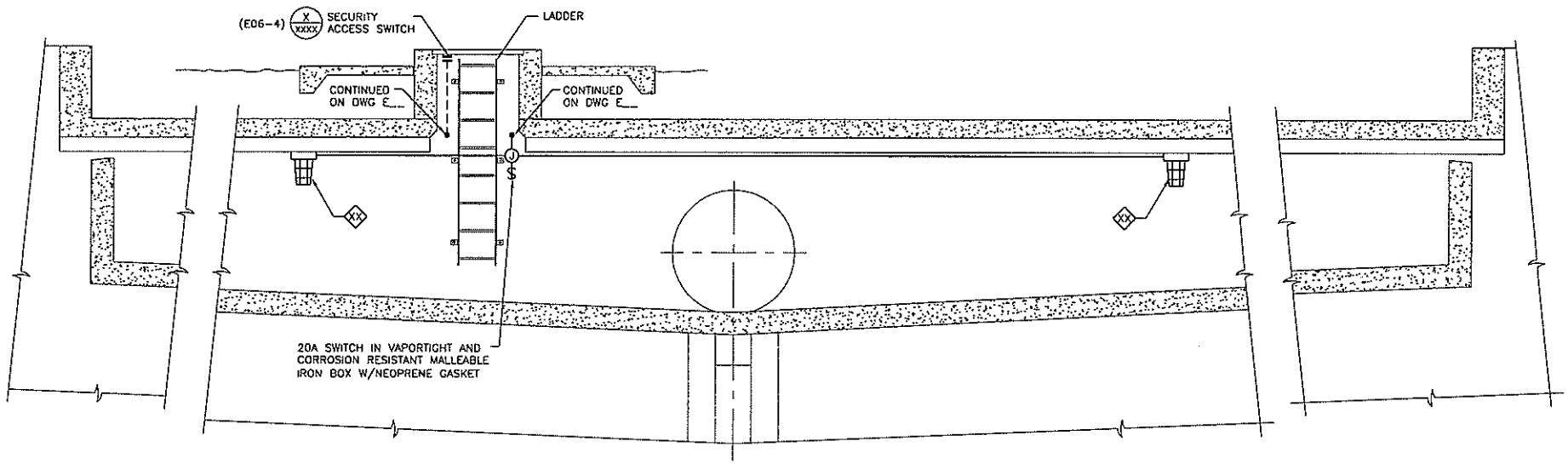

SECTION A

FOR REFERENCE ONLY

OVERFLOW STRUCTURE

NOT TO SCALE E06-2 070606

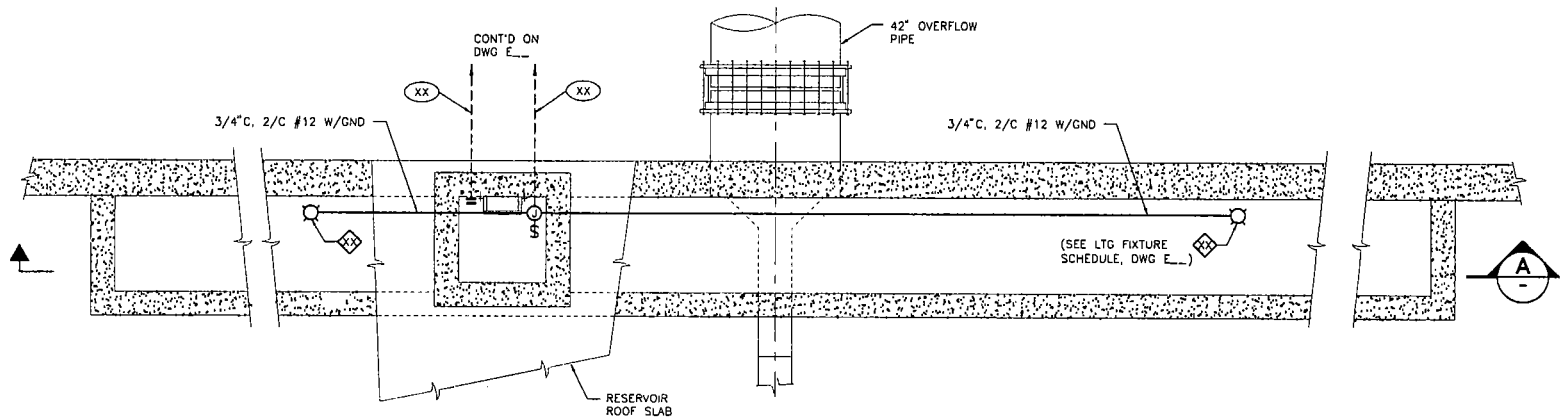

XX — 1"C, 2/C #18 (SECURITY ACCESS HATCH SWITCH ZS-__R)

XX — 1"C, 2/C #12 W/GND (LIGHTING)

PLAN

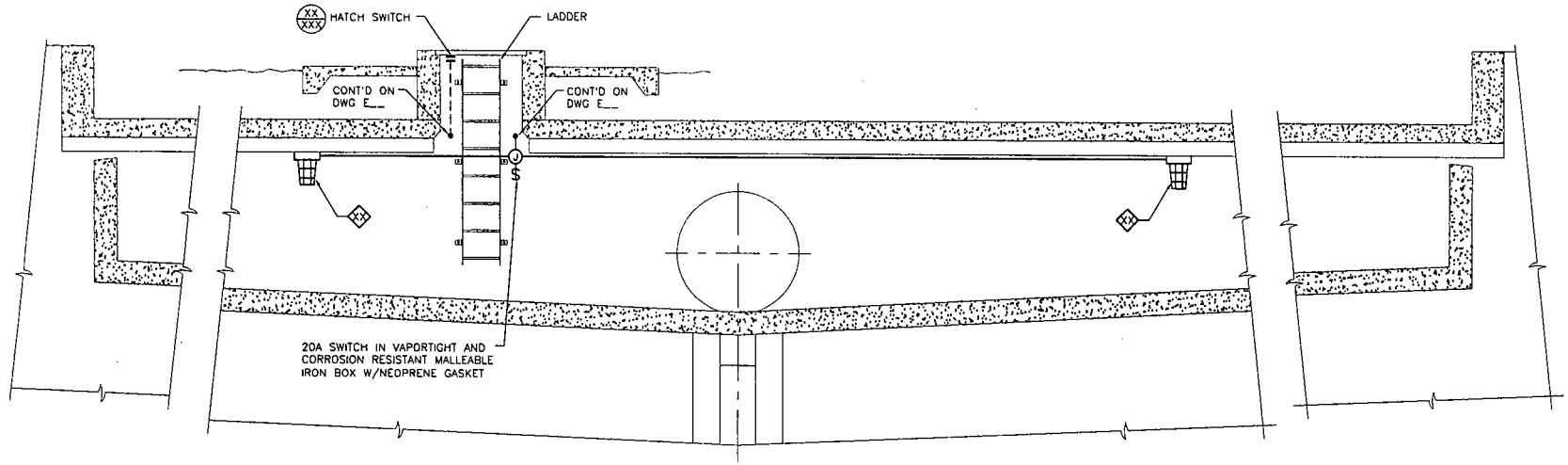

SECTION A

OVERFLOW STRUCTURE

SCALE: 3/8" = 1'-0" E06-2 081804

FOR REFERENCE ONLY

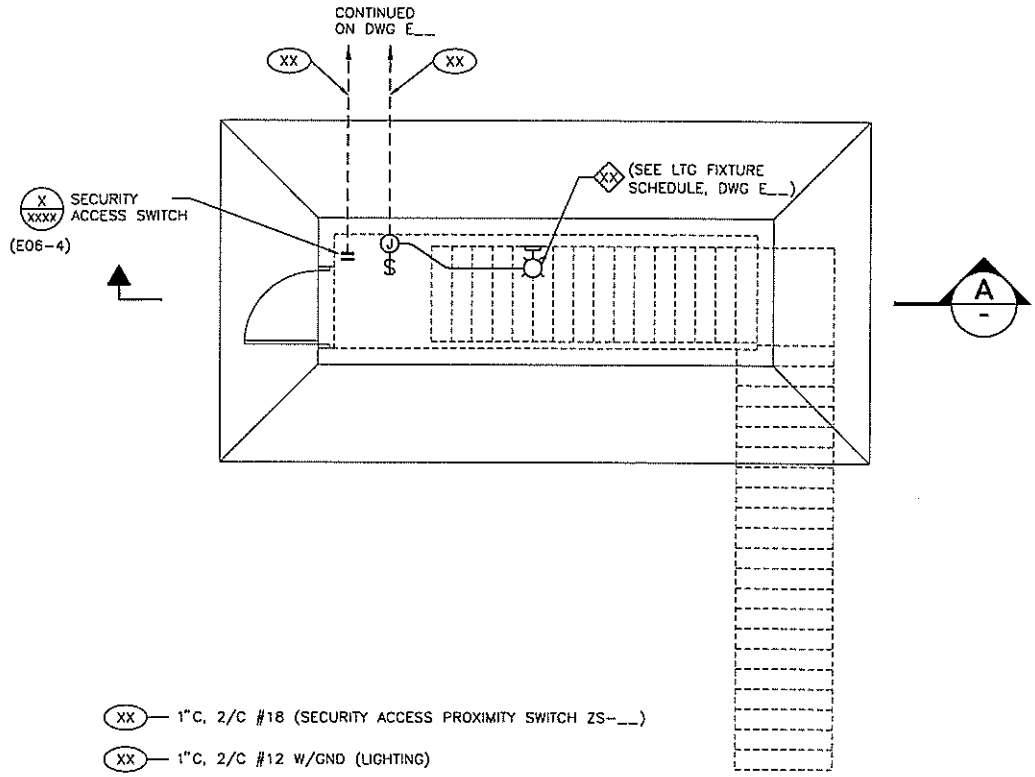

PLAN

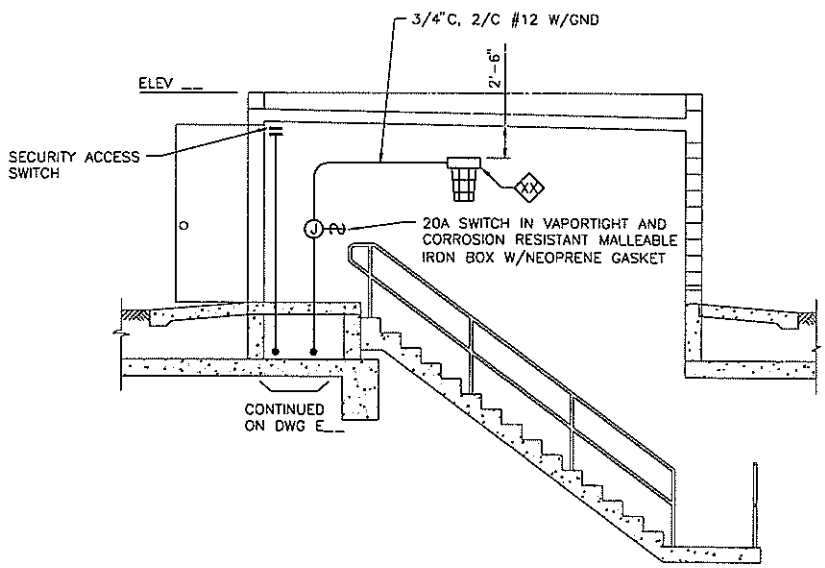

SECTION A -

RESERVOIR ACCESS

NOT TO SCALE E06-3 070606

FOR REFERENCE ONLY

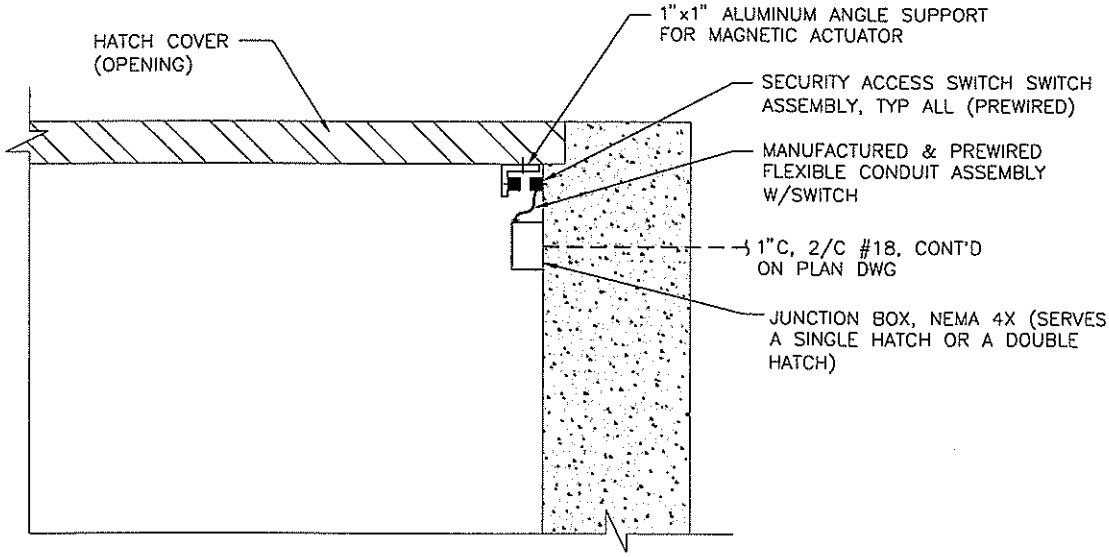

NOTES:

1. REFER TO DETAIL E06-1, 2 & 3 FOR PLAN OR SECTION VIEW.
2. MOUNT LIMIT SWITCH TO TRANSFER CONTACT POSITION WHEN COVER IS LIFTED (SEE PLANS FOR ACTUAL LOCATION).

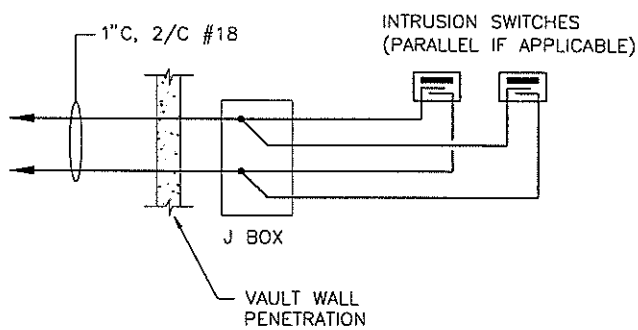

WIRING DIAGRAM

VAULT ACCESS SECURITY SWITCH MOUNTING DETAIL

NOT TO SCALE E06-4 090606

FOR REFERENCE ONLY

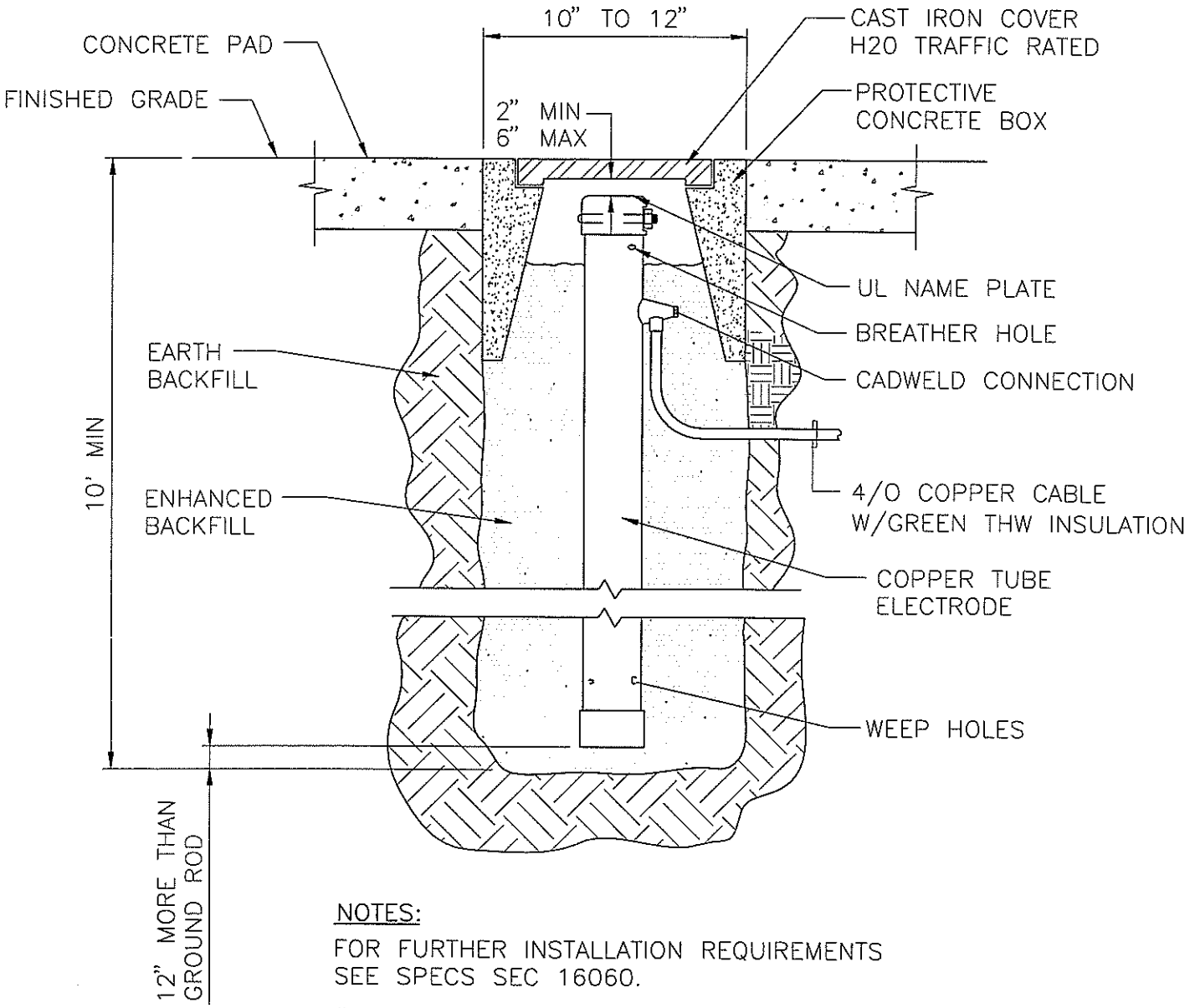

NOTES:

FOR FURTHER INSTALLATION REQUIREMENTS SEE SPECS SEC 16060.

"CADWELD" THE GROUNDING GRID TO THE GROUNDWELL 4/0 COPPER CABLE.

GROUNDWELL SYSTEM

NOT TO SCALE E06-6 080106

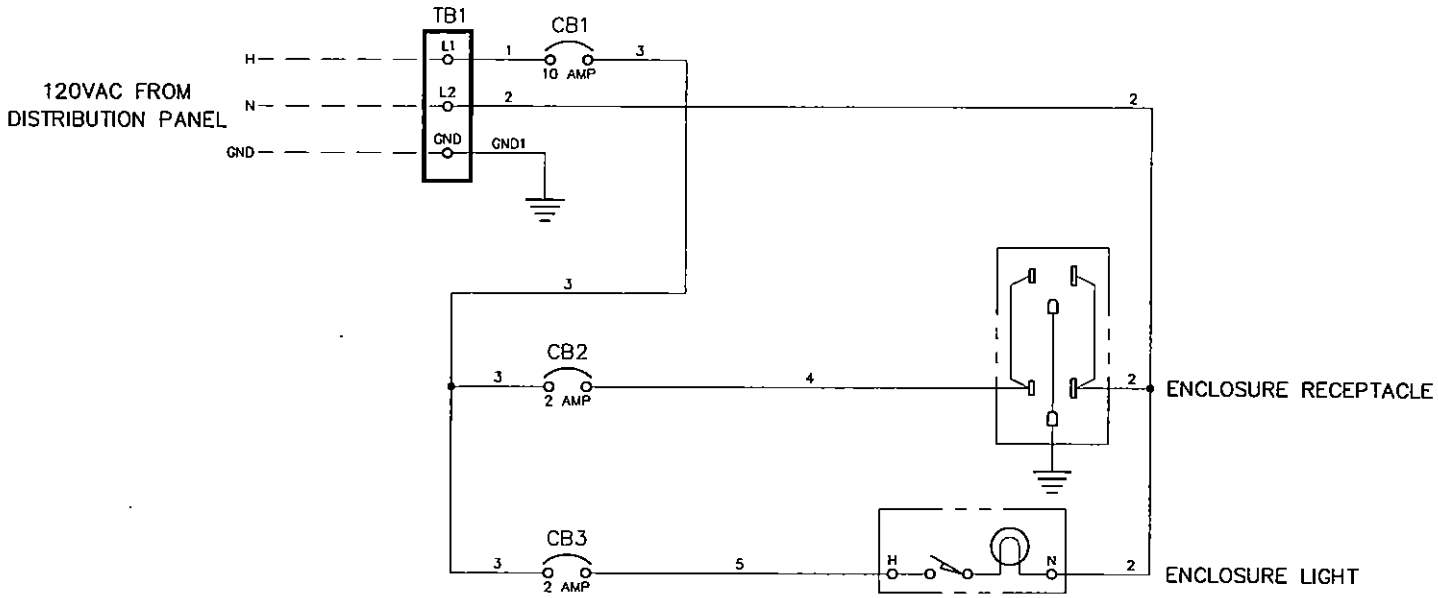

FOR EXAMPLE ONLY

FINAL HARDWARE CONFIGURATION WILL VARY ACCORDING TO SPECIFIC CONTRACT REQUIREMENTS. NO ATTEMPT HAS BEEN MADE TO DETAIL THE FINAL HARDWARE CONFIGURATION.

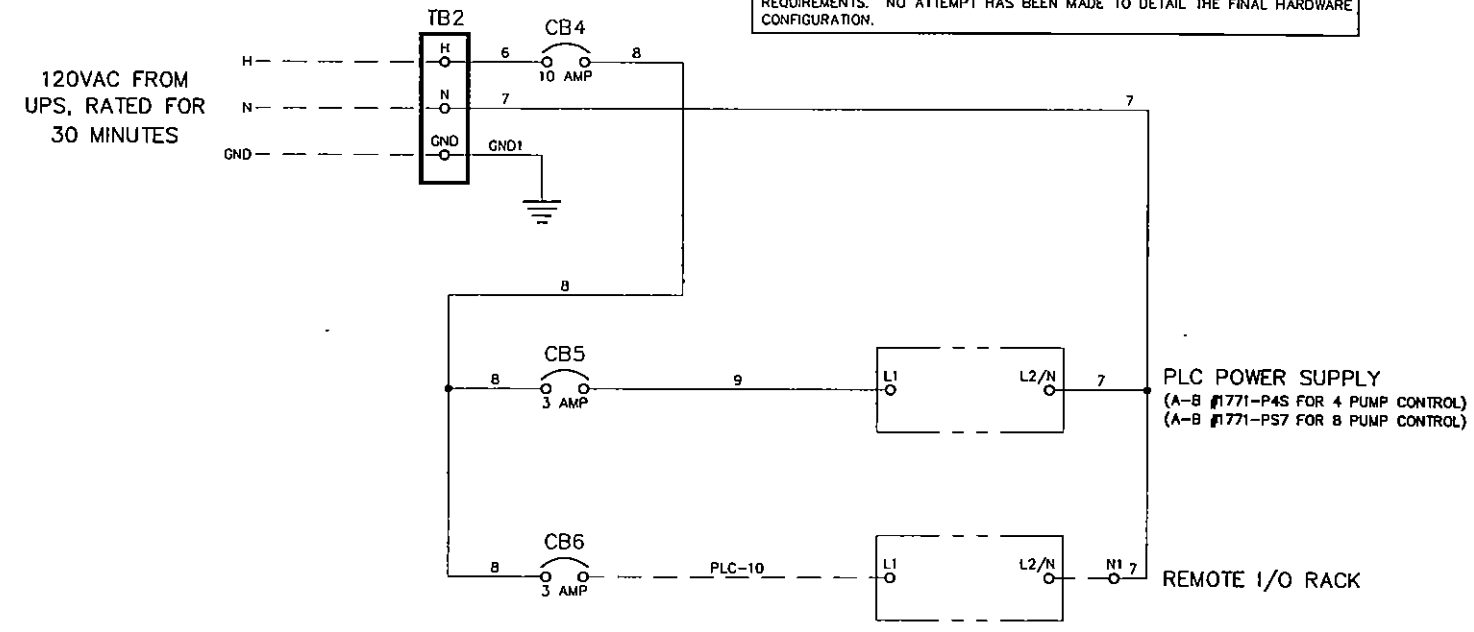

PLC - POWER DISTRIBUTION DIAGRAM

NOT TO SCALE E07-1 070103

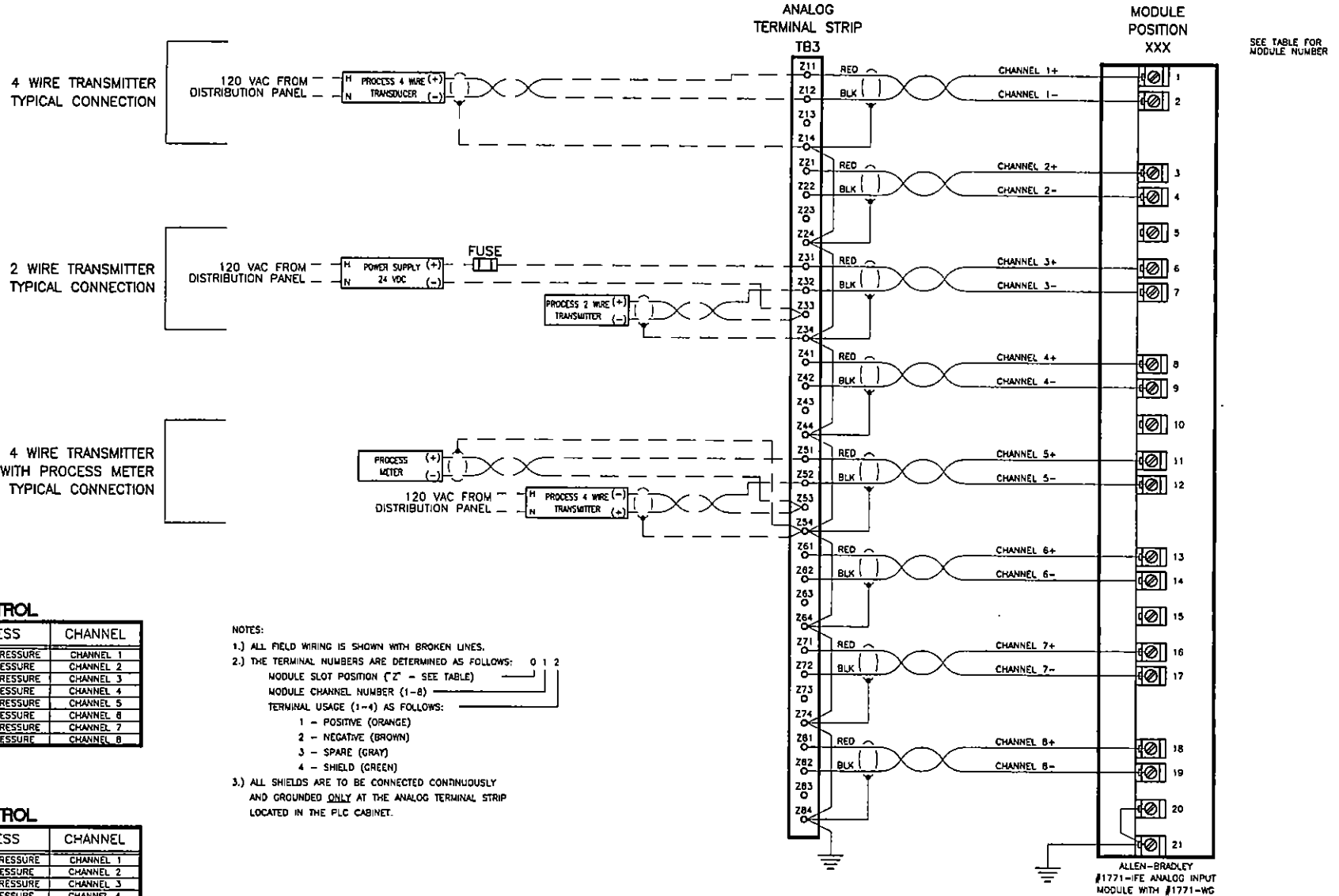

FOR 4 PUMP CONTROL

XXX	Z	PUMP No.	PROCESS	CHANNEL
000	0	PUMP 1	DISCHARGE PRESSURE	CHANNEL 1
			SUCTION PRESSURE	CHANNEL 2
000	0	PUMP 2	DISCHARGE PRESSURE	CHANNEL 3
			SUCTION PRESSURE	CHANNEL 4
000	0	PUMP 3	DISCHARGE PRESSURE	CHANNEL 5
			SUCTION PRESSURE	CHANNEL 6
000	0	PUMP 4	DISCHARGE PRESSURE	CHANNEL 7
			SUCTION PRESSURE	CHANNEL 8

FOR 8 PUMP CONTROL

XXX	Z	PUMP No.	PROCESS	CHANNEL
000	0	PUMP 1	DISCHARGE PRESSURE	CHANNEL 1
			SUCTION PRESSURE	CHANNEL 2
000	0	PUMP 2	DISCHARGE PRESSURE	CHANNEL 3
			SUCTION PRESSURE	CHANNEL 4
000	0	PUMP 3	DISCHARGE PRESSURE	CHANNEL 5
			SUCTION PRESSURE	CHANNEL 6
000	0	PUMP 4	DISCHARGE PRESSURE	CHANNEL 7
			SUCTION PRESSURE	CHANNEL 8
001	1	PUMP 5	DISCHARGE PRESSURE	CHANNEL 1
			SUCTION PRESSURE	CHANNEL 2
001	1	PUMP 6	DISCHARGE PRESSURE	CHANNEL 3
			SUCTION PRESSURE	CHANNEL 4
001	1	PUMP 7	DISCHARGE PRESSURE	CHANNEL 5
			SUCTION PRESSURE	CHANNEL 6
001	1	PUMP 8	DISCHARGE PRESSURE	CHANNEL 7
			SUCTION PRESSURE	CHANNEL 8

NOTES:

1.) ALL FIELD WIRING IS SHOWN WITH BROKEN LINES.

2.) THE TERMINAL NUMBERS ARE DETERMINED AS FOLLOWS: 0 1 2
- MODULE SLOT POSITION ("Z" - SEE TABLE)
- MODULE CHANNEL NUMBER (1-8)
- TERMINAL USAGE (1-4) AS FOLLOWS:
  - 1 - POSITIVE (ORANGE)
  - 2 - NEGATIVE (BROWN)
  - 3 - SPARE (GRAY)
  - 4 - SHIELD (GREEN)

3.) ALL SHIELDS ARE TO BE CONNECTED CONTINUOUSLY AND GROUNDED ONLY AT THE ANALOG TERMINAL STRIP LOCATED IN THE PLC CABINET.

FOR EXAMPLE ONLY

FINAL HARDWARE CONFIGURATION WILL VARY ACCORDING TO SPECIFIC CONTRACT REQUIREMENTS. NO ATTEMPT HAS BEEN MADE TO DETAIL THE FINAL HARDWARE CONFIGURATION.

PLC - TYPICAL ANALOG INPUTS

NOT TO SCALE E07-2 070103

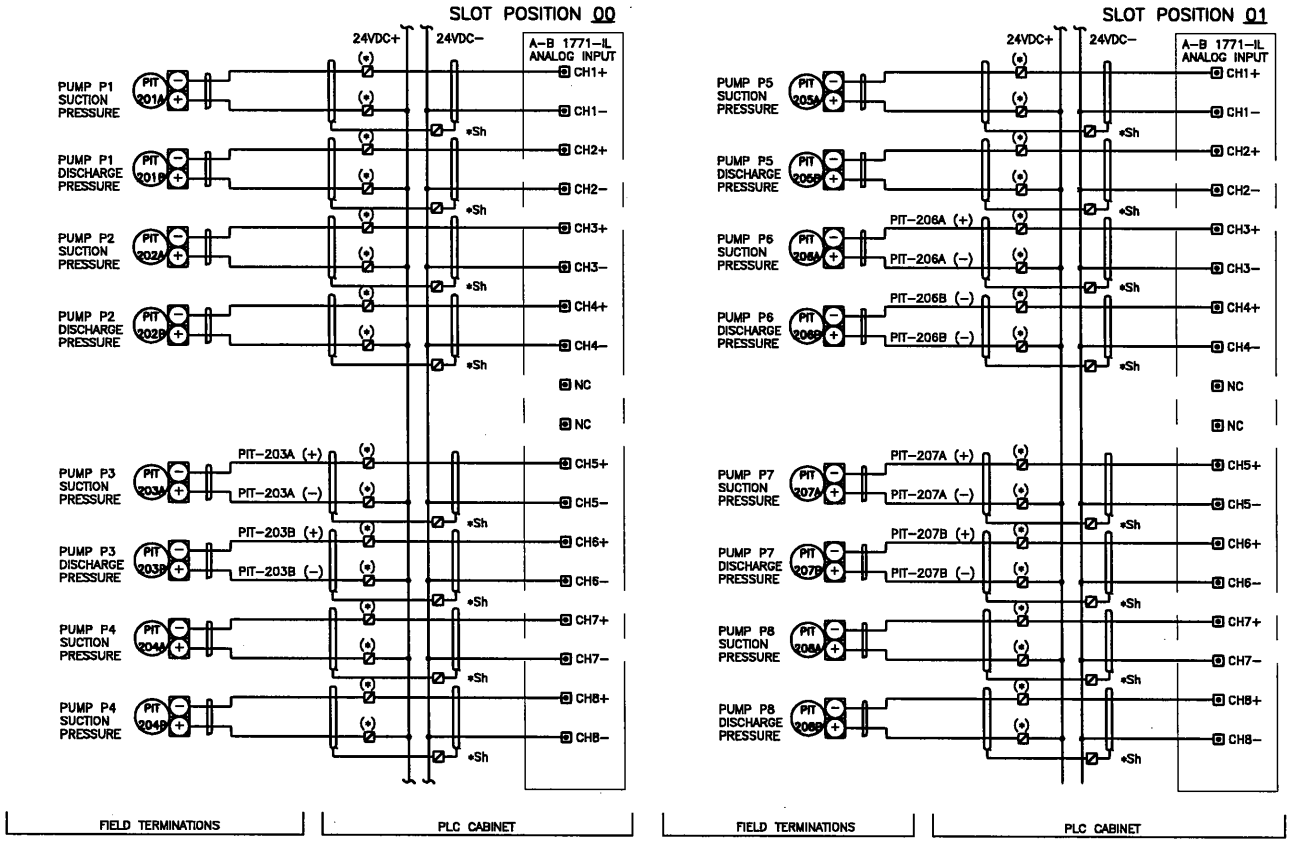

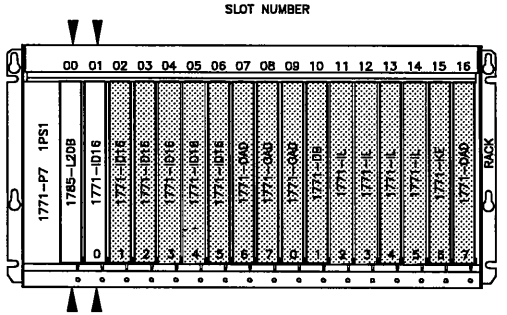

PLC RACK LOCATOR

(*) THESE TERMINAL NUMBERS SHALL BE ASSIGNED BASED ON ACTUAL I/O LAYOUT, PLC STANDARD LANDING TERMINAL ARRANGEMENT, AND ANALOG INPUT COUNT.

SHEET LEGEND

——— WIRING TO BE INSTALLED

** STANDARD DESCRIPTOR TEXT = 2538WMSP_XXX–XXX REPLACE "X" WITH DEVICE TAG NUMBERS

FOR EXAMPLE ONLY

FINAL HARDWARE CONFIGURATION WILL VARY ACCORDING TO SPECIFIC CONTRACT REQUIREMENTS. NO ATTEMPT HAS BEEN MADE TO DETAIL THE FINAL HARDWARE ARRANGEMENT.

INSTRUMENTATION AND CONTROL
PLC CABINET ANALOG INPUTS

NOT TO SCALE E07–2A 111703

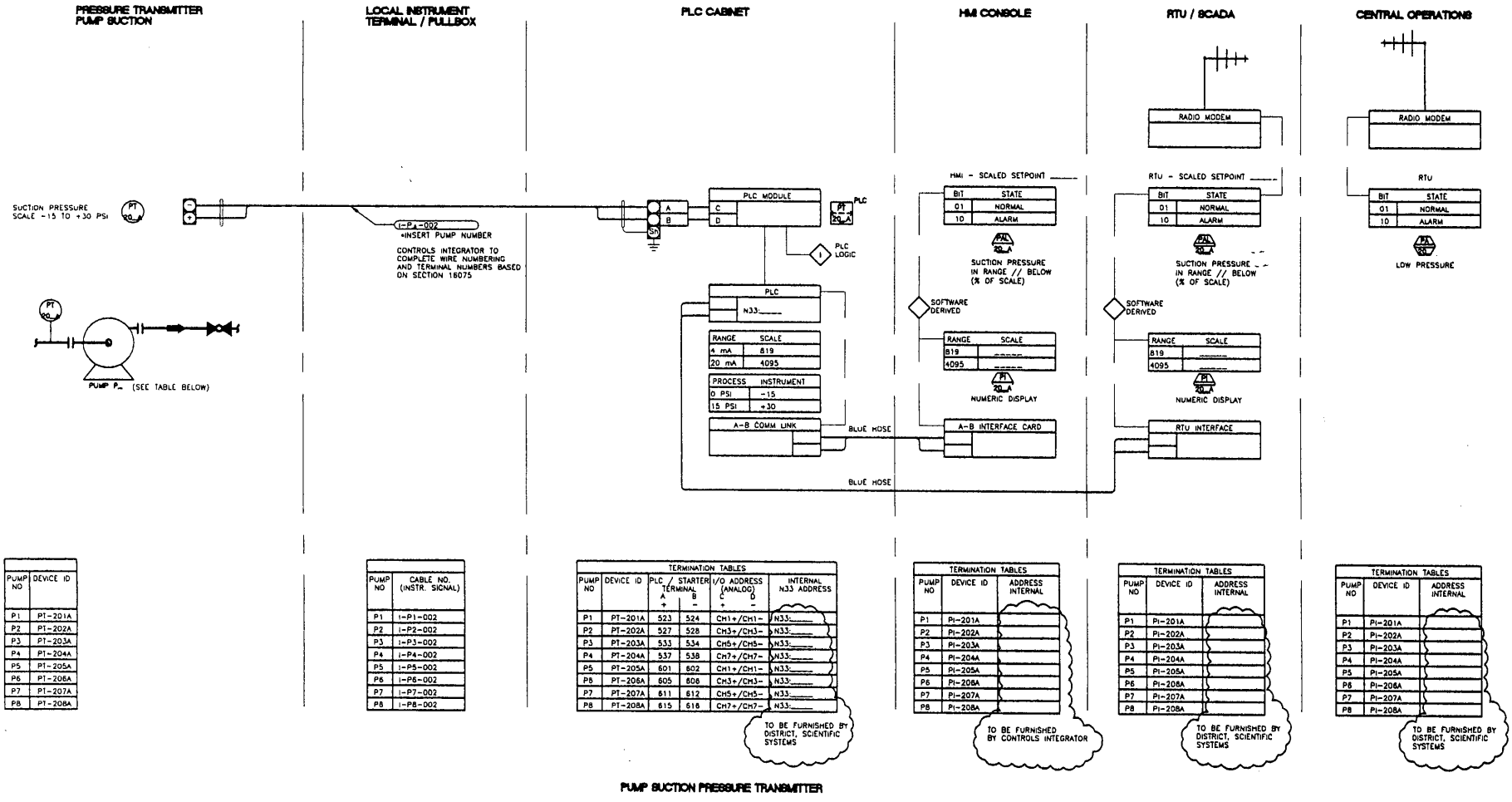

PUMP NO	DEVICE ID
P1	PT-201A
P2	PT-202A
P3	PT-203A
P4	PT-204A
P5	PT-205A
P6	PT-206A
P7	PT-207A
P8	PT-208A

PUMP NO	CABLE NO. (INSTR. SIGNAL)
P1	I-P1-002
P2	I-P2-002
P3	I-P3-002
P4	I-P4-002
P5	I-P5-002
P6	I-P6-002
P7	I-P7-002
P8	I-P8-002

TERMINATION TABLES

PUMP NO	DEVICE ID	PLC / STARTER TERMINAL A +	A −	I/O ADDRESS (ANALOG) C +	C −	INTERNAL N33 ADDRESS
P1	PT-201A	523	524	CH1+/CH1−		N33:____
P2	PT-202A	527	528	CH3+/CH3−		N33:____
P3	PT-203A	533	534	CH5+/CH5−		N33:____
P4	PT-204A	537	538	CH7+/CH7−		N33:____
P5	PT-205A	601	602	CH1+/CH1−		N33:____
P6	PT-206A	605	606	CH3+/CH3−		N33:____
P7	PT-207A	611	612	CH5+/CH5−		N33:____
P8	PT-208A	615	616	CH7+/CH7−		N33:____

TO BE FURNISHED BY DISTRICT, SCIENTIFIC SYSTEMS

TERMINATION TABLES

PUMP NO	DEVICE ID	ADDRESS INTERNAL
P1	PI-201A	
P2	PI-202A	
P3	PI-203A	
P4	PI-204A	
P5	PI-205A	
P6	PI-206A	
P7	PI-207A	
P8	PI-208A	

TO BE FURNISHED BY CONTROLS INTEGRATOR

TERMINATION TABLES

PUMP NO	DEVICE ID	ADDRESS INTERNAL
P1	PI-201A	
P2	PI-202A	
P3	PI-203A	
P4	PI-204A	
P5	PI-205A	
P6	PI-206A	
P7	PI-207A	
P8	PI-208A	

TO BE FURNISHED BY DISTRICT, SCIENTIFIC SYSTEMS

TERMINATION TABLES

PUMP NO	DEVICE ID	ADDRESS INTERNAL
P1	PI-201A	
P2	PI-202A	
P3	PI-203A	
P4	PI-204A	
P5	PI-205A	
P6	PI-206A	
P7	PI-207A	
P8	PI-208A	

TO BE FURNISHED BY DISTRICT, SCIENTIFIC SYSTEMS

PUMP SUCTION PRESSURE TRANSMITTER

SHEET LEGEND

SOFTWARE COMMUNICATION / LOGIC

NEW WIRING TO BE INSTALLED

FOR EXAMPLE ONLY

FINAL HARDWARE CONFIGURATION WILL VARY ACCORDING TO SPECIFIC CONTRACT REQUIREMENTS. NO ATTEMPT HAS BEEN MADE TO DETAIL THE FINAL HARDWARE ARRANGEMENT.

INSTRUMENTATION AND CONTROL
TYPICAL ANALOG LOOP DIAGRAM

NOT TO SCALE E07-28 111703

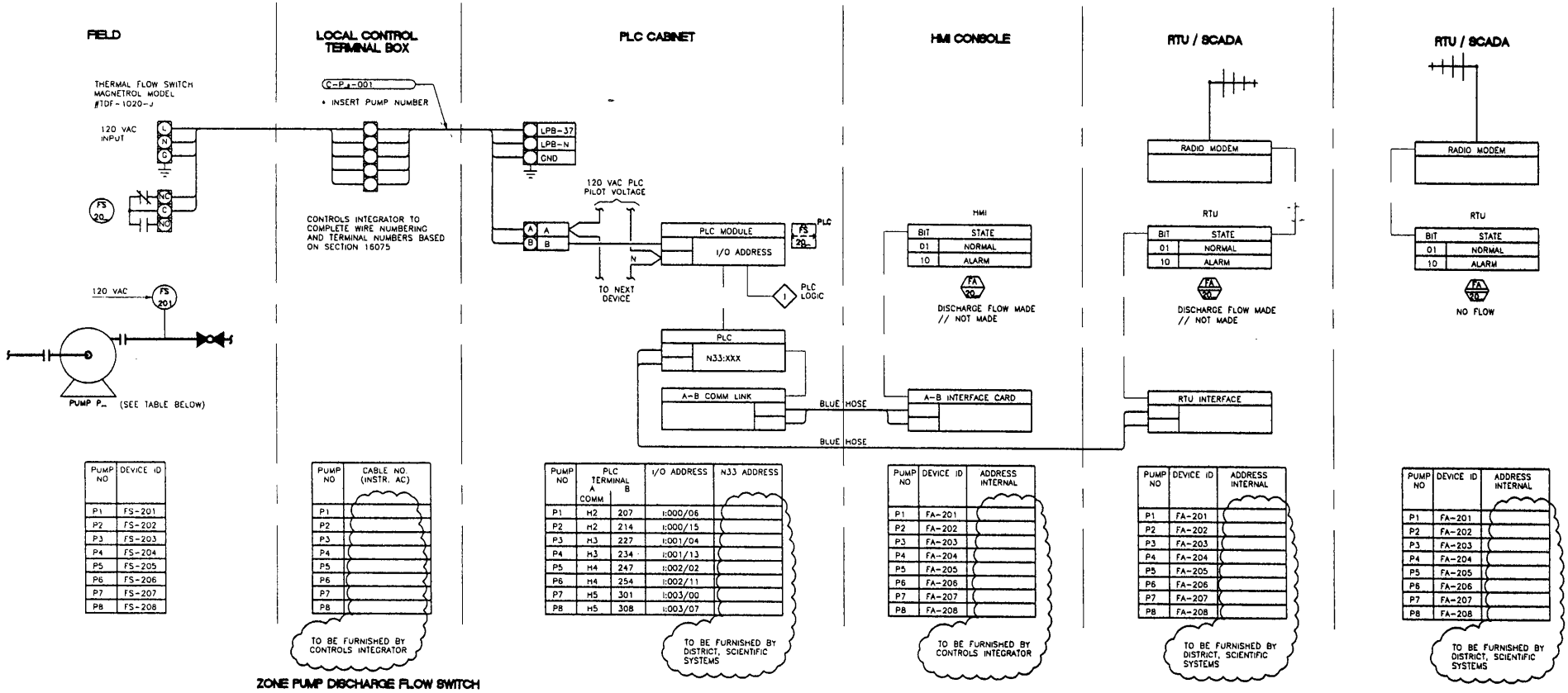

PUMP NO	DEVICE ID
P1	FS-201
P2	FS-202
P3	FS-203
P4	FS-204
P5	FS-205
P6	FS-206
P7	FS-207
P8	FS-208

PUMP NO	CABLE NO. (INSTR. AC)
P1	
P2	
P3	
P4	
P5	
P6	
P7	
P8	

TO BE FURNISHED BY CONTROLS INTEGRATOR

ZONE PUMP DISCHARGE FLOW SWITCH

PUMP NO	PLC TERMINAL A COMM	PLC TERMINAL B	I/O ADDRESS	N33 ADDRESS
P1	H2	207	I:000/06	
P2	H2	214	I:000/15	
P3	H3	227	I:001/04	
P4	H3	234	I:001/13	
P5	H4	247	I:002/02	
P6	H4	254	I:002/11	
P7	H5	301	I:003/00	
P8	H5	308	I:003/07	

TO BE FURNISHED BY DISTRICT, SCIENTIFIC SYSTEMS

PUMP NO	DEVICE ID	ADDRESS INTERNAL
P1	FA-201	
P2	FA-202	
P3	FA-203	
P4	FA-204	
P5	FA-205	
P6	FA-206	
P7	FA-207	
P8	FA-208	

TO BE FURNISHED BY CONTROLS INTEGRATOR

PUMP NO	DEVICE ID	ADDRESS INTERNAL
P1	FA-201	
P2	FA-202	
P3	FA-203	
P4	FA-204	
P5	FA-205	
P6	FA-206	
P7	FA-207	
P8	FA-208	

TO BE FURNISHED BY DISTRICT, SCIENTIFIC SYSTEMS

PUMP NO	DEVICE ID	ADDRESS INTERNAL
P1	FA-201	
P2	FA-202	
P3	FA-203	
P4	FA-204	
P5	FA-205	
P6	FA-206	
P7	FA-207	
P8	FA-208	

TO BE FURNISHED BY DISTRICT, SCIENTIFIC SYSTEMS

SHEET LEGEND

SOFTWARE COMMUNICATION / LOGIC

NEW WIRING TO BE INSTALLED

FOR EXAMPLE ONLY

FINAL HARDWARE ARRANGEMENT WILL VARY ACCORDING TO SPECIFIC CONTRACT REQUIREMENTS. NO ATTEMPT HAS BEEN MADE TO DETAIL THE FINAL PROGRAM LOGIC.

INSTRUMENTATION AND CONTROL TYPICAL DIGITAL FIELD CONTROL LOOP DIAGRAM

NOT TO SCALE E07-2C 111703

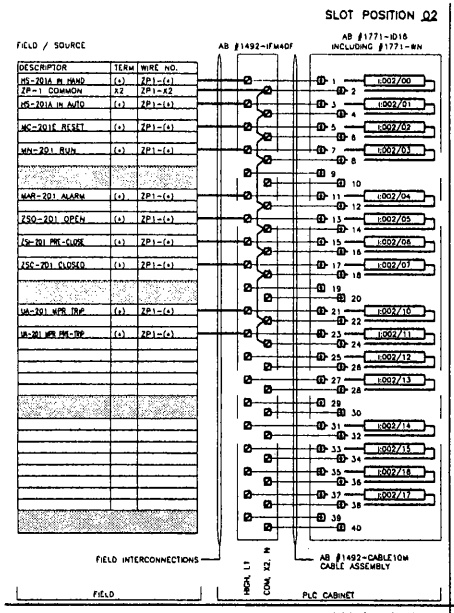

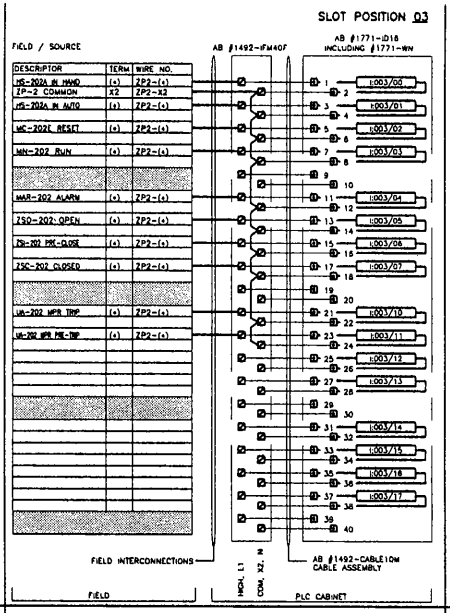

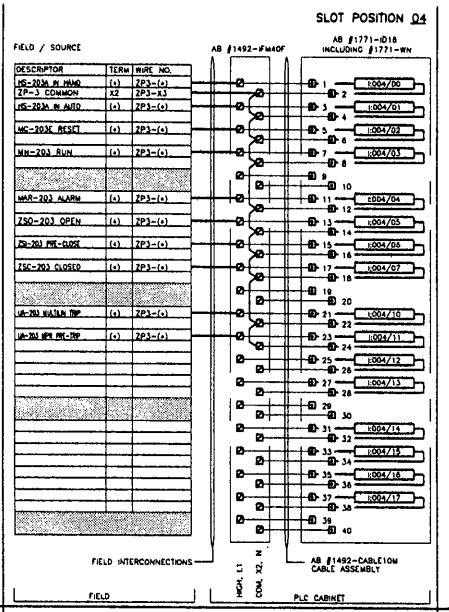

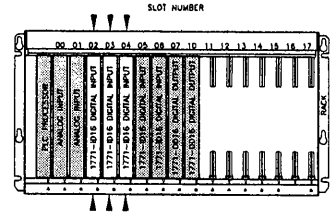

PLC RACK LOCATOR

(*) REPLACE ASERISK WITH STARTER/NEMA TERMINAL NUMBER.

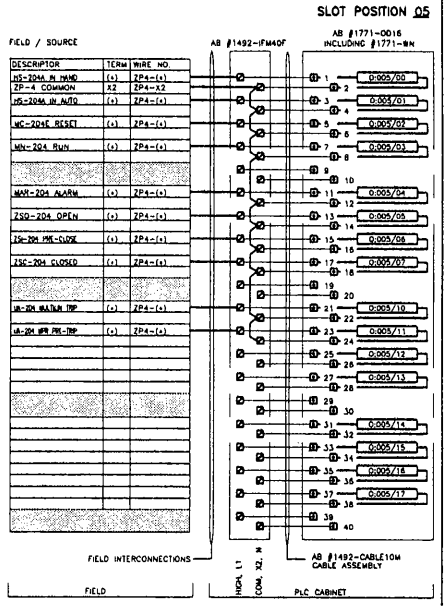

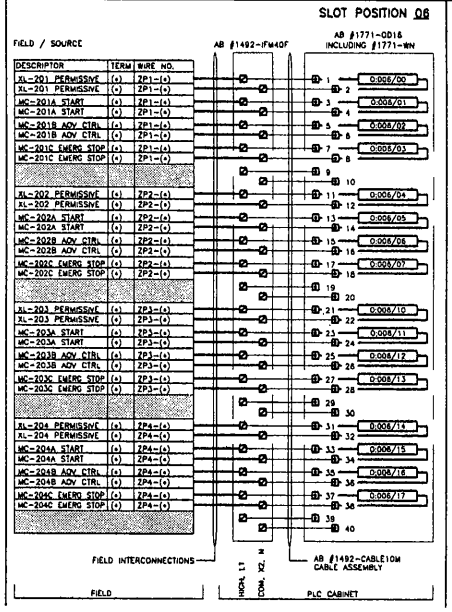

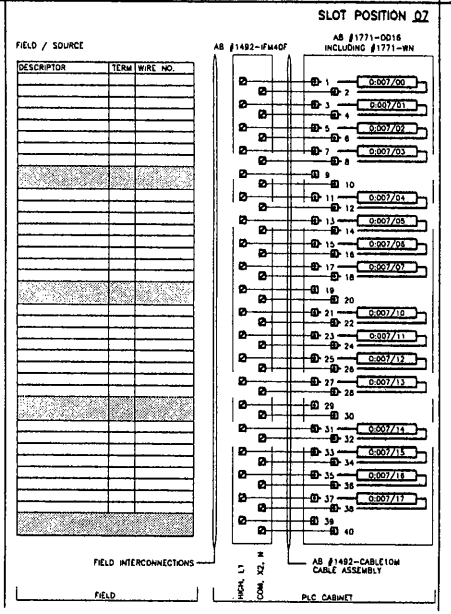

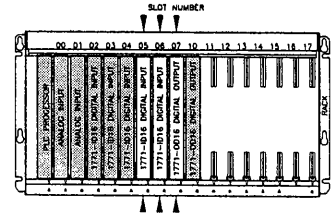

PLC RACK LOCATOR

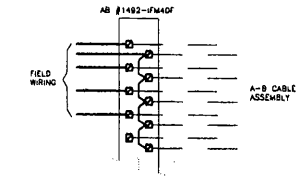

JUMPER INSTALLATION
FOR COMMON NEUTRALS, DC COMMON, ETC

FOR EXAMPLE ONLY

FINAL HARDWARE CONFIGURATION WILL VARY ACCORDING TO SPECIFIC CONTRACT REQUIREMENTS. NO ATTEMPT HAS BEEN MADE TO DETAIL THE FINAL HARDWARE ARRANGEMENT.

INSTRUMENTATION AND CONTROL ISOLATED

DIGITAL INPUTS/OUTPUTS

NOT TO SCALE E07-3 111703

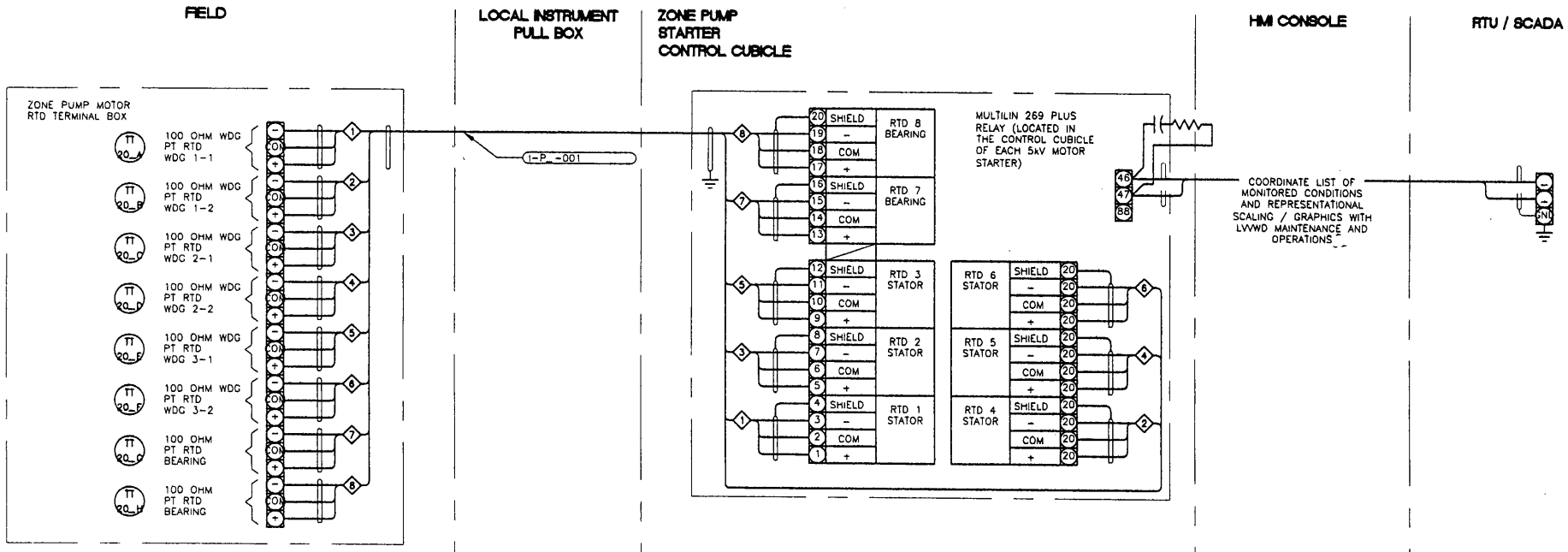

TERMINATION TABLES		
PUMP NO	DEVICE ID	CABLE NO. (INSTR. SIGNAL)
P1	TT-201A-H	TT-201A-H-I-1
P2	TT-202A-H	TT-202A-H-I-1
P3	TT-203A-H	TT-203A-H-I-1
P4	TT-204A-H	TT-204A-H-I-1
P5	TT-205A-H	TT-205A-H-I-1
P6	TT-206A-H	TT-206A-H-I-1
P7	TT-207A-H	TT-207A-H-I-1
P8	TT-208A-H	TT-208A-H-I-1

TERMINATION TABLES	
PUMP NO	CABLE NO. (INSTR. SIGNAL)
P1	TT-201A-H-I-1
P2	TT-202A-H-I-1
P3	TT-203A-H-I-1
P4	TT-204A-H-I-1
P5	TT-205A-H-I-1
P6	TT-206A-H-I-1
P7	TT-207A-H-I-1
P8	TT-208A-H-I-1

FOR EXAMPLE ONLY

FINAL HARDWARE CONFIGURATION WILL VARY ACCORDING TO SPECIFIC CONTRACT REQUIREMENTS. NO ATTEMPT HAS BEEN MADE TO DETAIL THE FINAL PROGRAM LOGIC.

INSTRUMENTATION AND CONTROL MOTOR RTD LOOP DIAGRAM

NOT TO SCALE E07-3A 111703

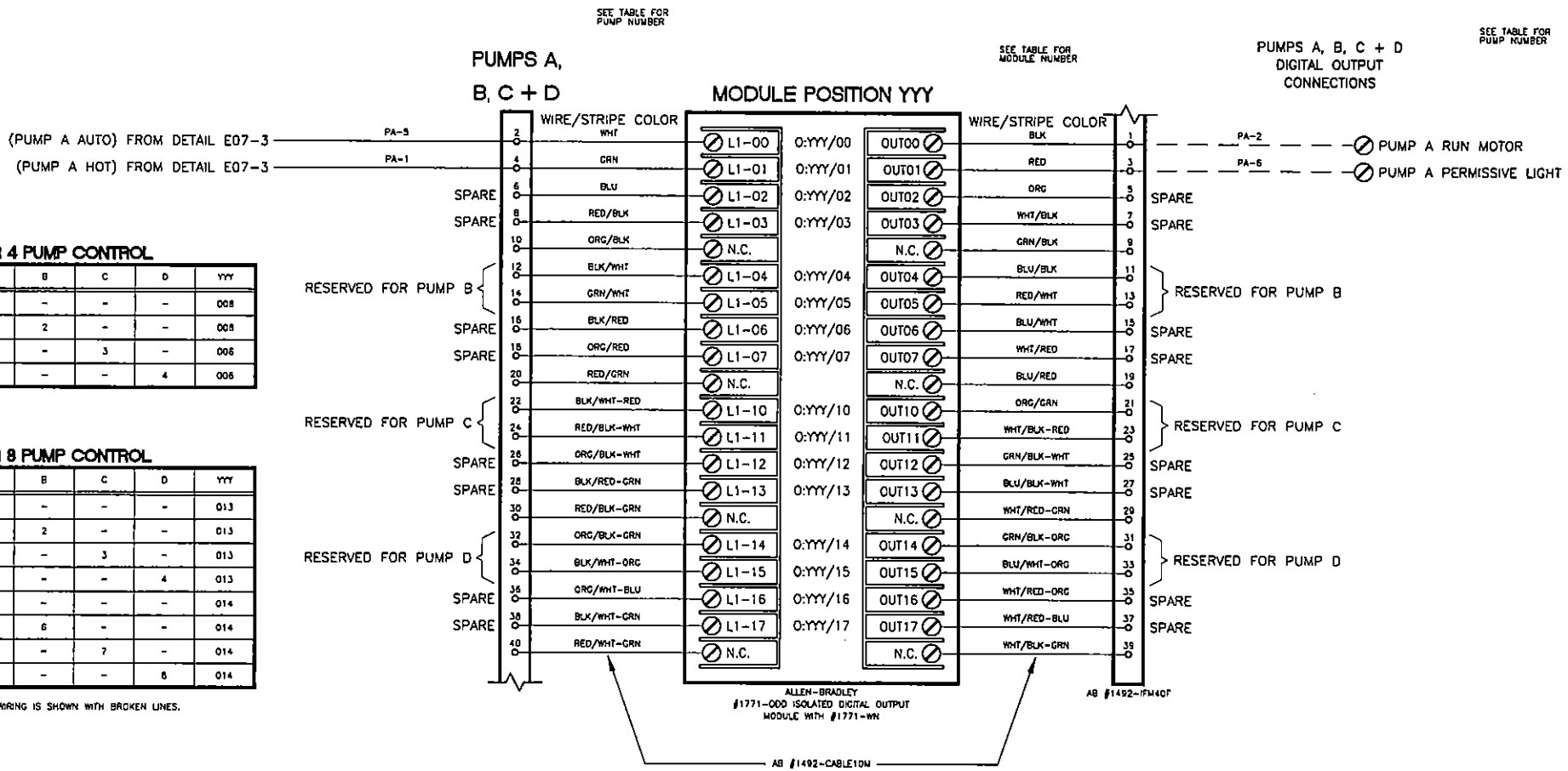

FOR 4 PUMP CONTROL

PUMP No.	A	B	C	D	YYY
PUMP 1	1	-	-	-	008
PUMP 2	-	2	-	-	008
PUMP 3	-	-	3	-	006
PUMP 4	-	-	-	4	006

FOR 8 PUMP CONTROL

PUMP No.	A	B	C	D	YYY
PUMP 1	1	-	-	-	013
PUMP 2	-	2	-	-	013
PUMP 3	-	-	3	-	013
PUMP 4	-	-	-	4	013
PUMP 5	5	-	-	-	014
PUMP 6	-	6	-	-	014
PUMP 7	-	-	7	-	014
PUMP 8	-	-	-	8	014

NOTES: 1.) ALL FIELD WIRING IS SHOWN WITH BROKEN LINES.

FOR EXAMPLE ONLY

FINAL HARDWARE CONFIGURATION WILL VARY ACCORDING TO SPECIFIC CONTRACT REQUIREMENTS. NO ATTEMPT HAS BEEN MADE TO DETAIL THE FINAL HARDWARE CONFIGURATION.

PLC - ISOLATED DIGITAL OUTPUTS

NOT TO SCALE E07-4 070103

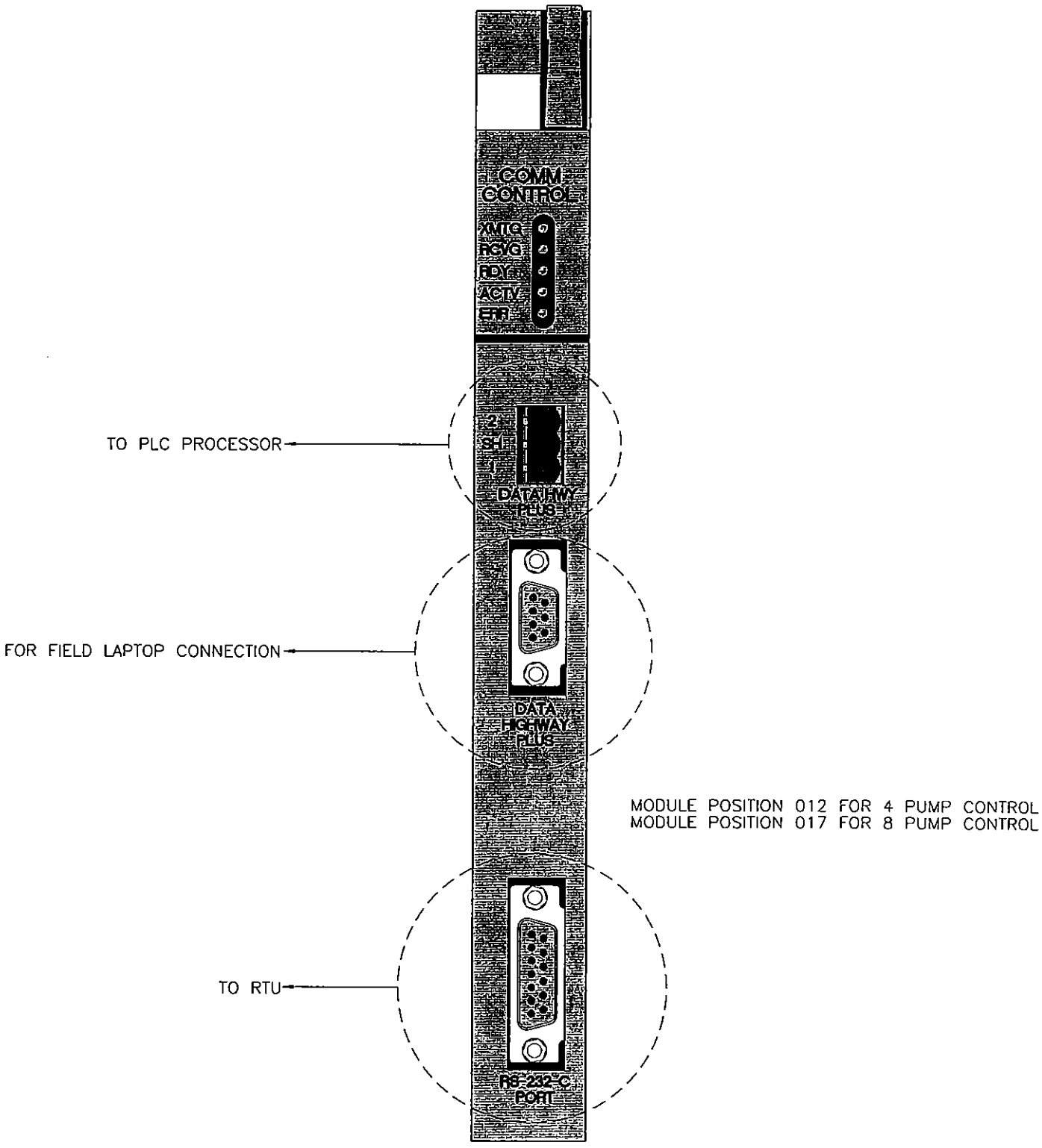

FOR EXAMPLE ONLY

FINAL HARDWARE CONFIGURATION WILL VARY ACCORDING TO SPECIFIC CONTRACT REQUIREMENTS. NO ATTEMPT HAS BEEN MADE TO DETAIL THE FINAL HARDWARE CONFIGURATION.

PLC - DATA HIGHWAY PLUS/RS-232 INTERFACE CARD

NOT TO SCALE

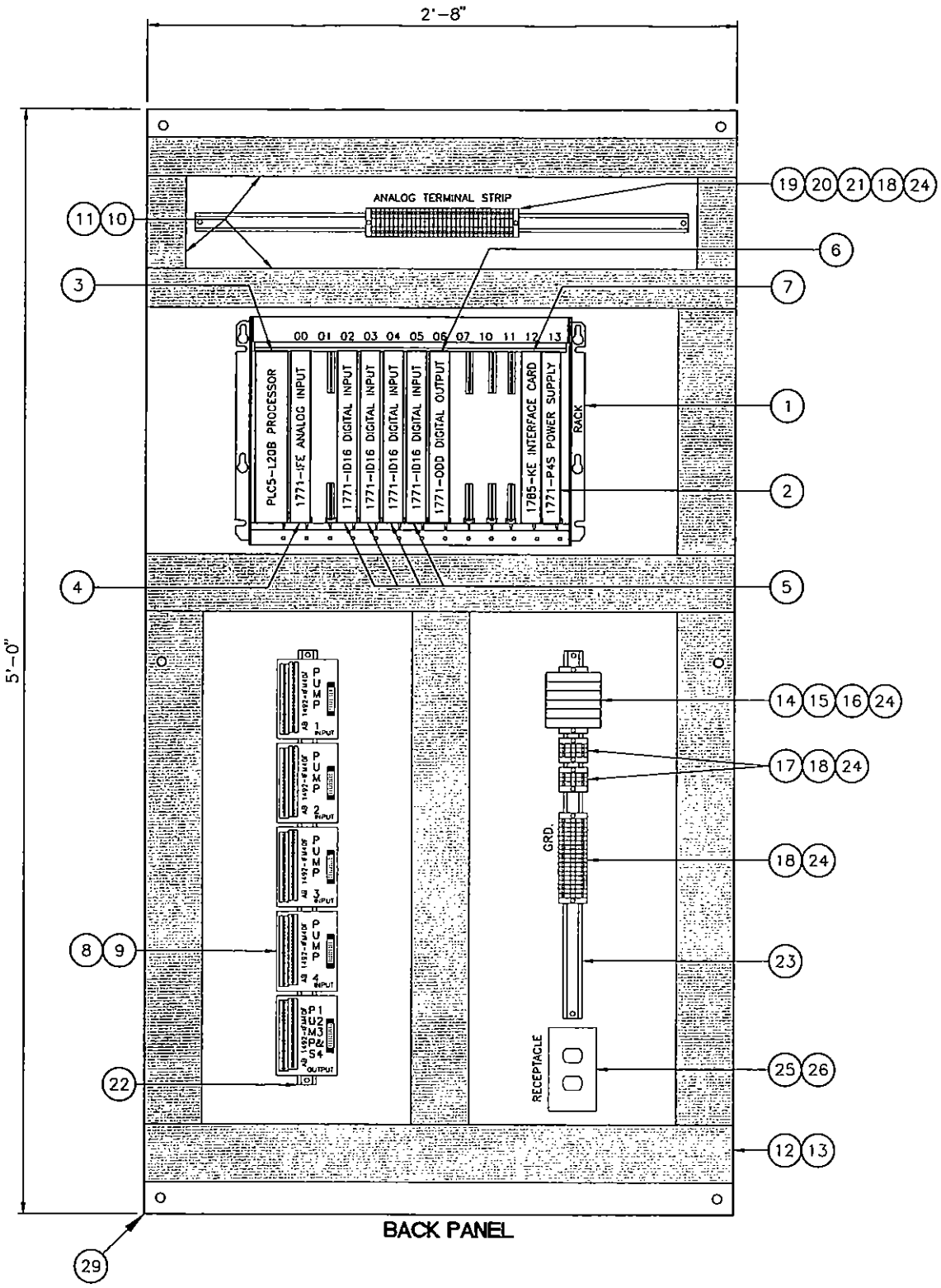

NOTE:
FOR ITEM SCHEDULE SEE (X / XXXX) (E07-7)

FOR EXAMPLE ONLY

FINAL HARDWARE CONFIGURATION WILL VARY ACCORDING TO SPECIFIC CONTRACT REQUIREMENTS. NO ATTEMPT HAS BEEN MADE TO DETAIL THE FINAL HARDWARE CONFIGURATION.

PLC - 4 PUMP INTERNAL LAYOUT

NOT TO SCALE

EXAMPLE ONLY

◯	QTY *	DESCRIPTION
1		12 SLOT INPUT/OUTPUT CHASSIS
2		POWER SUPPLY
3		CPU – PLC5/20 PROCESSOR
4		8 DIFFERENTIAL ANALOG INPUT MODULE W/ WIRING ARM
5		16 ISOLATED DIGITAL INPUT MODULE W/ WIRING ARM
6		16 ISOLATED DIGITAL OUTPUT MODULE W/ WIRING ARM
7		DH+/RS-232C COMMUNICATIONS MODULE
8		40 POINT INTERFACE MODULE
9		CABLE FOR INTERFACE MODULE – 1M L
10		2"Wx3"H SLOTTED WIRING DUCT – 6' L
11		COVER FOR 2"W WIRING DUCT – 6' L
12		3"Wx3"H SLOTTED WIRING DUCT – 6' L
13		COVER FOR 3"W WIRING DUCT – 6' L
14		CIRCUIT BREAKER, 10A, 120VAC, 1 POLE
15		CIRCUIT BREAKER, 2A, 120VAC, 1 POLE
16		CIRCUIT BREAKER, 3A, 120VAC, 1 POLE
17		TERMINAL BLOCK, WHITE, 30A, 600V AC/DC
18		TERMINAL BLOCK, GREEN, 30A, 600V AC/DC
19		TERMINAL BLOCK, RED, 30A, 600V AC/DC
20		TERMINAL BLOCK, ORANGE, 30A, 600V AC/DC
21		TERMINAL BLOCK, BROWN, 30A, 600V AC/DC
22		TERMINAL BLOCK, GRAY, 30A, 600V AC/DC
23		ELEVATED DIN RAIL FOR IFM'S, 35MMx7.5MM RAIL – 57MM H, 1M L
24		ELEVATED MOUNTING RAIL FOR TERMINAL BLOCKS, .88"x.3" RAIL – 21/4" H, 36" L
25		TERMINAL BLOCK END ANCHOR
26		GFI AC DUPLEX RECEPTACLE, 15A, 120VAC
27		DUPLEX BOX, 1/2"
28		INCANDESCENT LIGHTING PACKAGE DOOR SWITCH WITH TERMINAL BLOCK 60W T-10 BULB, 120VAC, 15A
29		ENCLOSURE, NEMA 12, FREE STANDING, 72"H X 36"W X 24"D
30		BACK PANEL, FULL SIZE
31		FOLDING SHELF, 18"x18"x1" D WHEN FOLDED
32		DOOR STOP KIT

NOTES:

1. IF THIS DESIGN IS BEING ADAPTED FOR A REMOTE RACK, ELIMINATE THE CPU AND COMMUNICATIONS MODULES AND USE A REMOTE I/O ADAPTOR MODULE

* ACTUAL QUANTITIES WILL VARY PER CONTRACT.

PLC - 4 PUMP BILL OF MATERIALS

NOT TO SCALE

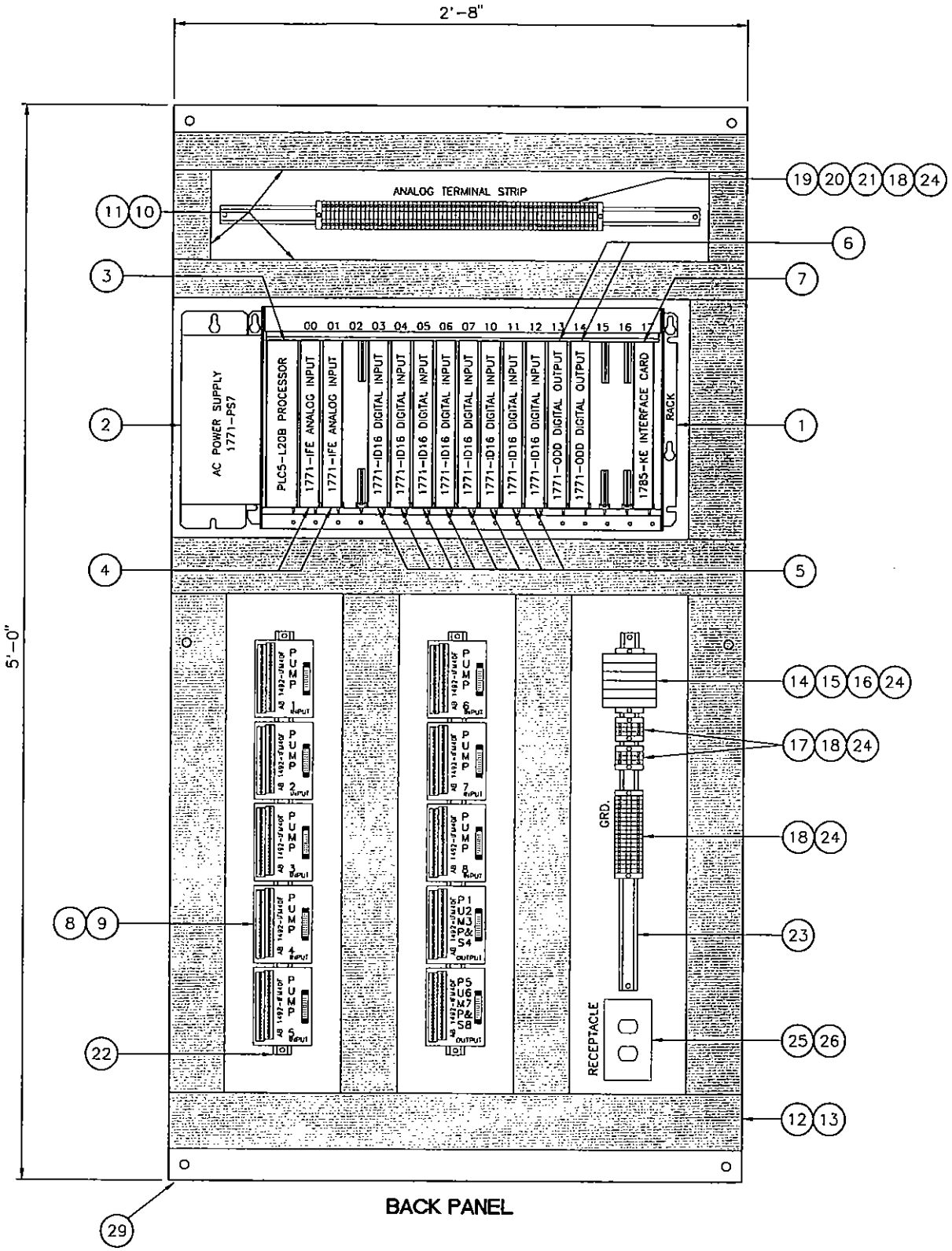

BACK PANEL

NOTE:
FOR ITEM SCHEDULE SEE $\frac{X}{XXXX}$ (E07-9)

FOR EXAMPLE ONLY

FINAL HARDWARE CONFIGURATION WILL VARY ACCORDING TO SPECIFIC CONTRACT REQUIREMENTS. NO ATTEMPT HAS BEEN MADE TO DETAIL THE FINAL HARDWARE CONFIGURATION.

PLC - 8 PUMP INTERNAL LAYOUT

NOT TO SCALE E07-8 070103

EXAMPLE ONLY

◯	QTY *	DESCRIPTION
1		16 SLOT INPUT/OUTPUT CHASSIS
2		POWER SUPPLY
3		CPU – PLC5/20 PROCESSOR
4		8 DIFFERENTIAL ANALOG INPUT MODULE W/ WIRING ARM
5		16 ISOLATED DIGITAL INPUT MODULE W/ WIRING ARM
6		16 ISOLATED DIGITAL OUTPUT MODULE W/ WIRING ARM
7		DH+/RS-232C COMMUNICATIONS MODULE
8		40 POINT INTERFACE MODULE
9		CABLE FOR INTERFACE MODULE – 1M L
10		2"Wx3"H SLOTTED WIRING DUCT – 6' L
11		COVER FOR 2"W WIRING DUCT – 6' L
12		3"Wx3"H SLOTTED WIRING DUCT – 6' L
13		COVER FOR 3"W WIRING DUCT – 6' L
14		CIRCUIT BREAKER, 10A, 120VAC, 1 POLE
15		CIRCUIT BREAKER, 2A, 120VAC, 1 POLE
16		CIRCUIT BREAKER, 3A, 120VAC, 1 POLE
17		TERMINAL BLOCK, WHITE, 30A, 600V AC/DC
18		TERMINAL BLOCK, GREEN, 30A, 600V AC/DC
19		TERMINAL BLOCK, RED, 30A, 600V AC/DC
20		TERMINAL BLOCK, ORANGE, 30A, 600V AC/DC
21		TERMINAL BLOCK, BROWN, 30A, 600V AC/DC
22		TERMINAL BLOCK, GRAY, 30A, 600V AC/DC
23		ELEVATED DIN RAIL FOR IFM'S, 35MMx7.5MM RAIL – 57MM H, 1M L
24		ELEVATED MOUNTING RAIL FOR TERMINAL BLOCKS, .88"x.3" RAIL – 21/4" H, 36" L
25		TERMINAL BLOCK END ANCHOR
26		GFI AC DUPLEX RECEPTACLE, 15A, 120VAC
27		DUPLEX BOX, 1/2"
28		INCANDESCENT LIGHTING PACKAGE DOOR SWITCH WITH TERMINAL BLOCK 60W T-10 BULB, 120VAC, 15A
29		ENCLOSURE, NEMA 12, FREE STANDING, 72"H X 36"W X 24"D
30		BACK PANEL, FULL SIZE
31		FOLDING SHELF, 18"x18"x1" D WHEN FOLDED
32		DOOR STOP KIT

NOTES:

1. IF THIS DESIGN IS BEING ADAPTED FOR A REMOTE RACK, ELIMINATE THE CPU AND COMMUNICATIONS MODULES AND USE A REMOTE I/O ADAPTOR MODULE

* ACTUAL QUANTITIES WILL VARY PER CONTRACT.

PLC - 8 PUMP BILL OF MATERIALS

NOT TO SCALE E07-9 070103

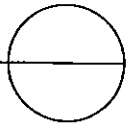

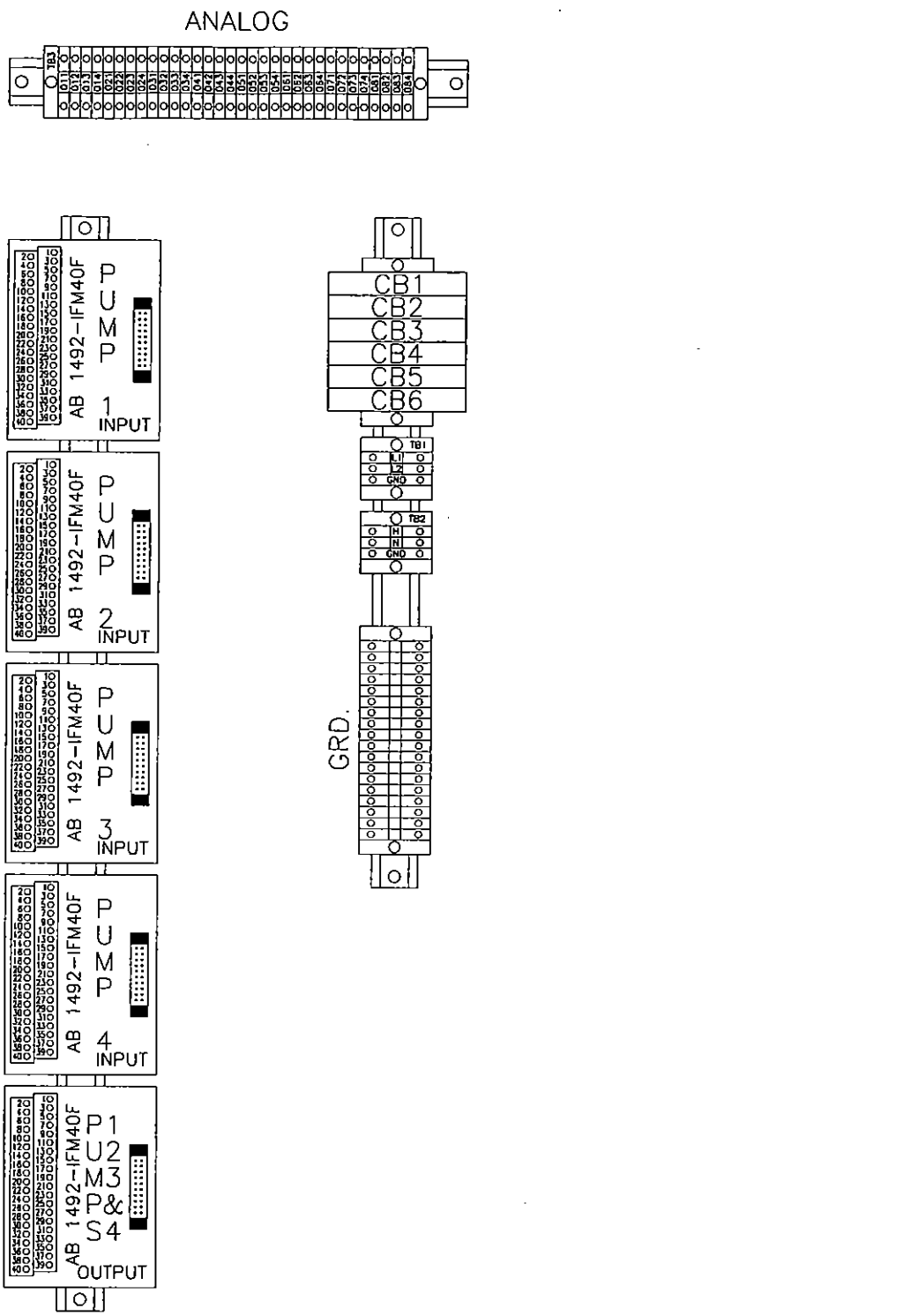

FOR EXAMPLE ONLY

FINAL HARDWARE CONFIGURATION WILL VARY ACCORDING TO SPECIFIC CONTRACT REQUIREMENTS. NO ATTEMPT HAS BEEN MADE TO DETAIL THE FINAL HARDWARE CONFIGURATION.

PLC - 4 PUMP TERMINAL BLOCK LAYOUT

NOT TO SCALE E07-10 070103

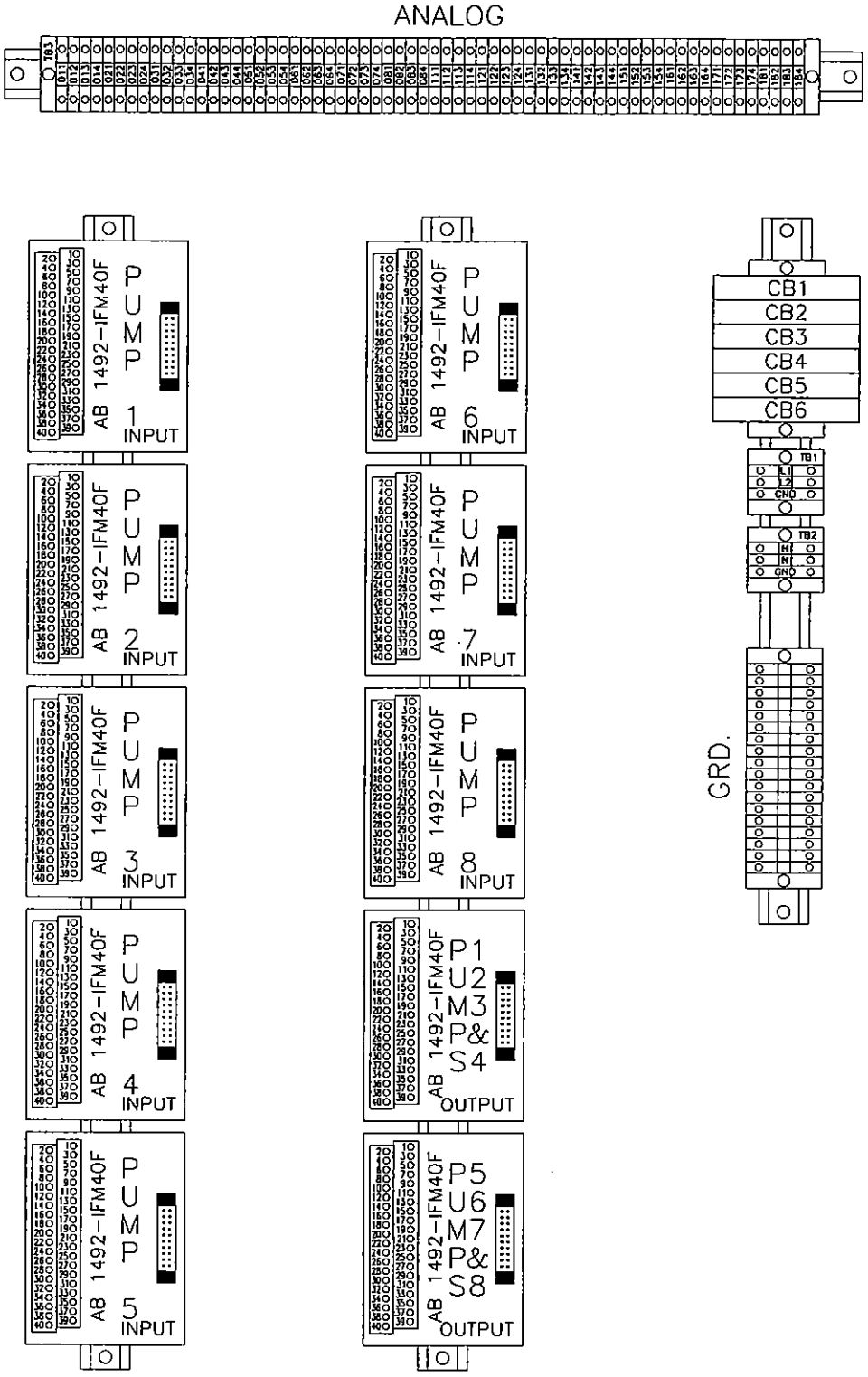

FOR EXAMPLE ONLY

FINAL HARDWARE CONFIGURATION WILL VARY ACCORDING TO SPECIFIC CONTRACT REQUIREMENTS. NO ATTEMPT HAS BEEN MADE TO DETAIL THE FINAL HARDWARE CONFIGURATION.

PLC - 8 PUMP TERMINAL BLOCK LAYOUT

NOT TO SCALE E07-11 011900

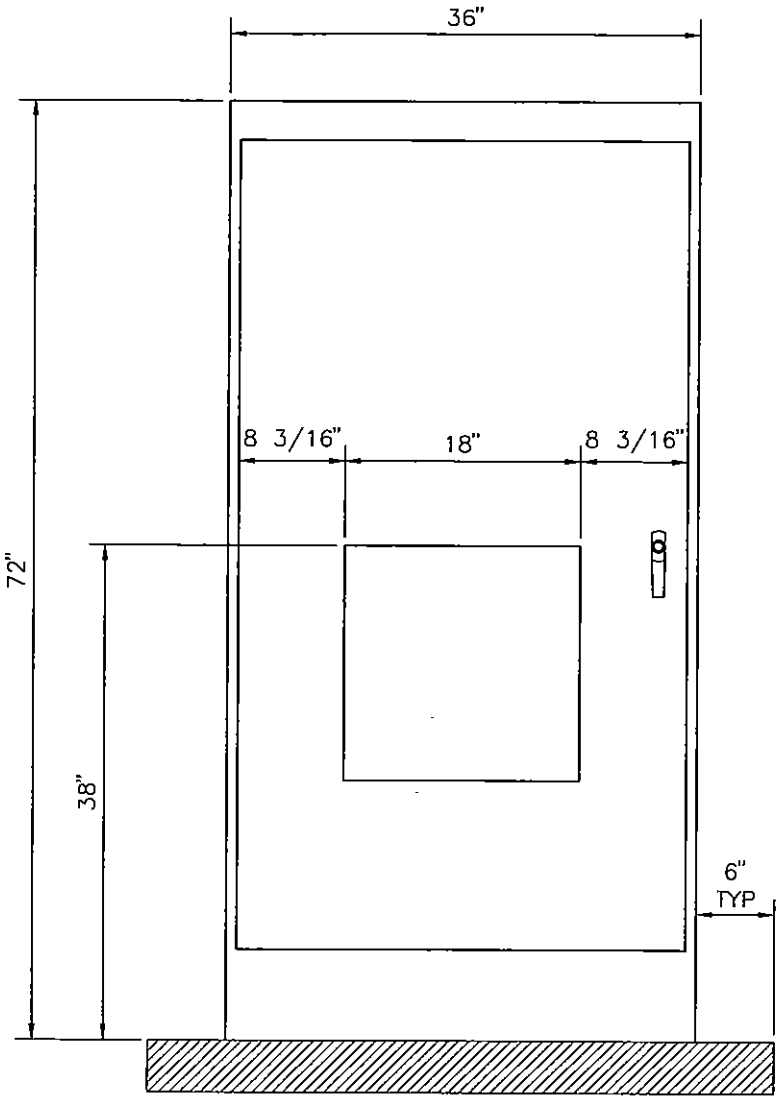

FRONT VIEW OF
PLC ENCLOSURE

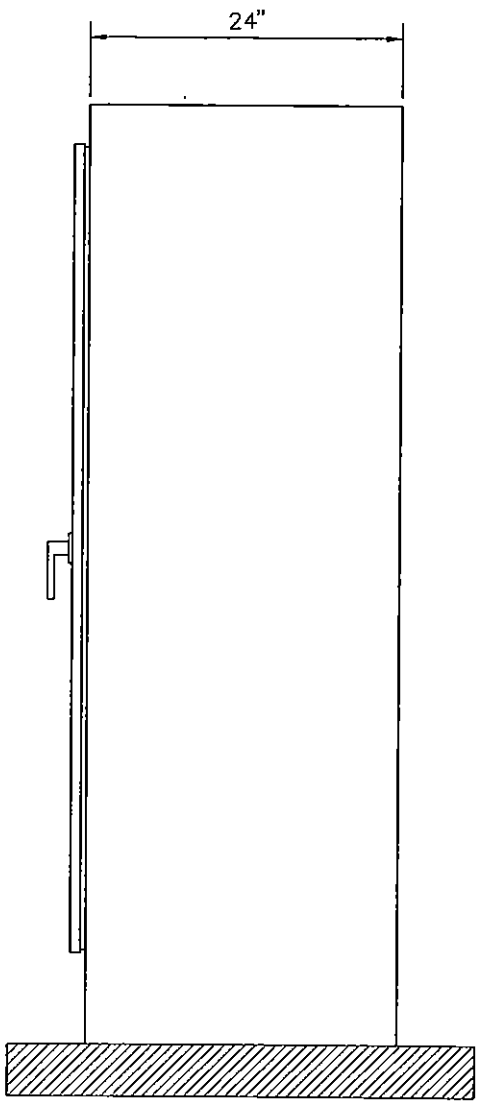

SIDE VIEW OF
PLC ENCLOSURE

NOTES:

1. PLC ENCLOSURE SHALL BE A FREE STANDING NEMA 12 (INDOOR) OR NEMA 4 (OUTDOOR), SINGLE DOOR ENCLOSURE
2. ENCLOSURE FINISHED SHALL BE DONE BY MANUFACTURER:
   INTERIOR – STANDARD WHITE ENAMEL (INTERIOR)
   EXTERIOR – POLYESTER URETHANE POWDER.
3. HOUSE KEEPING PAD SHALL BE AT LEAST 4 INCH THICK AND 6 INCH WIDE (OVERLAP) FROM ENCLOSURE SIZE.
4. ENCLOSURE BOTTOM SHALL BE PUNCHED FOR THE EXACT NUMBER OF CONDUITS STUBS TO BE USED. PUNCHED HOLE DIAMETER SHALL NOT EXCEED CONDUIT DIAMETER PLUS 1/2 INCH.

FOR EXAMPLE ONLY

FINAL HARDWARE CONFIGURATION WILL VARY ACCORDING TO SPECIFIC CONTRACT REQUIREMENTS. NO ATTEMPT HAS BEEN MADE TO DETAIL THE FINAL HARDWARE CONFIGURATION.

PLC - ENCLOSURE DETAILS

NOT TO SCALE E07-12 070103

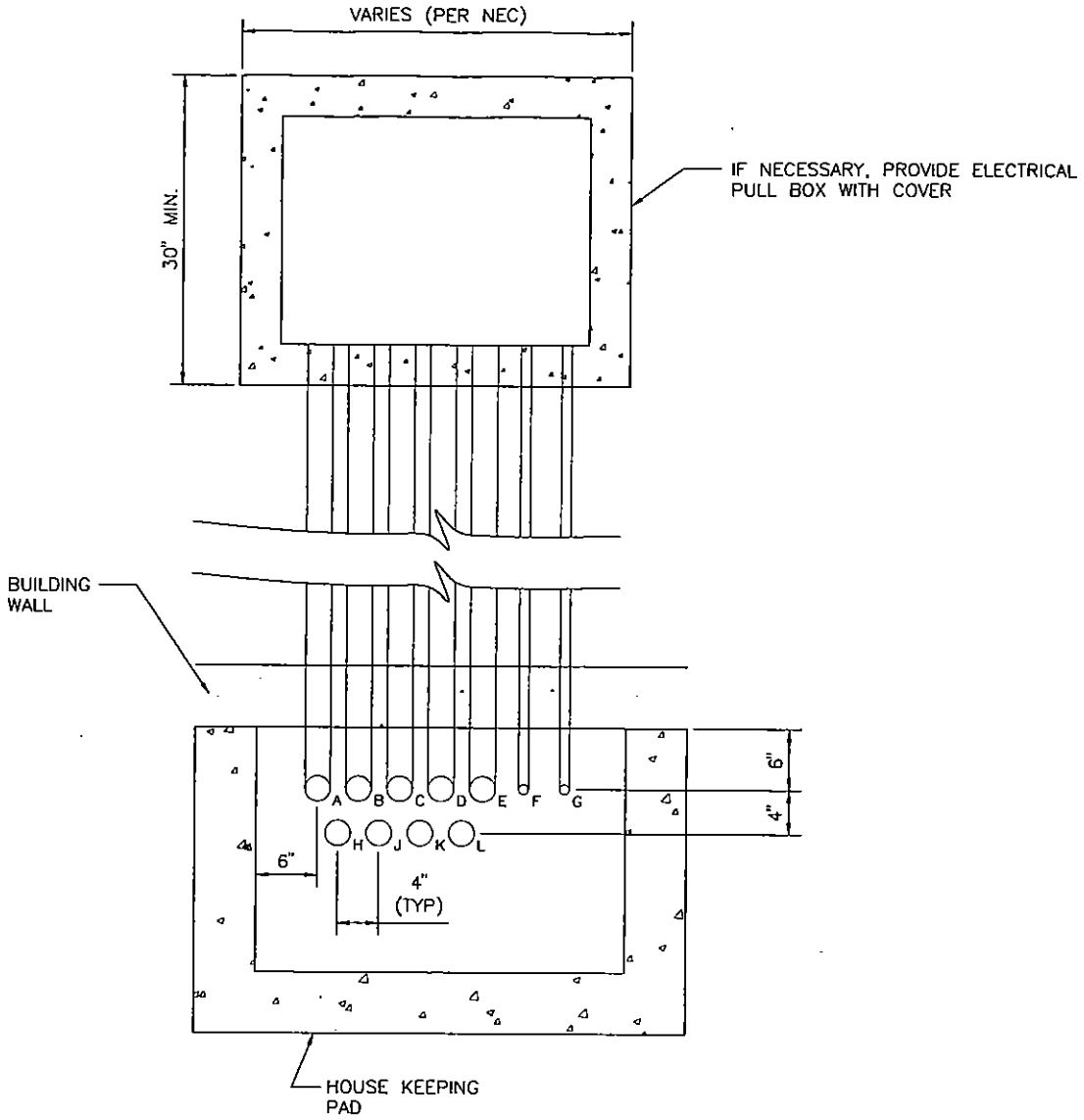

NOTES:

1. EACH CONDUIT STUB SHALL BE USED AS FOLLOWS:

A	2"C ANALOG (A/I) SIGNAL RUN
B	2"C ANALOG (A/I) SIGNAL RUN
C	2"C SPARE (A/I OR D/I) RUN
D	2"C DISCRETE (D/I) SIGNAL RUN
E	2"C DISCRETE (D/I) SIGNAL RUN
F	3/4"C SPARE
G	3/4"C 120 VOLT POWER
H	2"C ANALOG (A/I) SIGNAL RUN
J	2"C ANALOG (A/I) SIGNAL RUN
K	2"C DISCRETE (D/I) SIGNAL RUN
L	2"C DISCRETE (D/I) SIGNAL RUN

2. CONDUIT STUBS SHALL BE FLUSH MOUNTED WITH PROTECTIVE GROUND BUSHINGS. ALL UNUSED CONDUITS SHALL BE CAPPED.

3. THE OTHER END OF THE CONDUIT STUBS SHALL RUN AND TERMINATE TO THE FIELD DEVICES OR A PULL BOX, IF NECESSARY.

4. PROVIDE NO. 8 AWG COPPER GROUND WIRE WITH GREEN THW INSULATION TO BE BONDED TO ALL GROUND BUSHINGS AND ATTACHED TO THE STATION GROUND GRID.

FOR EXAMPLE ONLY

FINAL HARDWARE CONFIGURATION WILL VARY ACCORDING TO SPECIFIC CONTRACT REQUIREMENTS. NO ATTEMPT HAS BEEN MADE TO DETAIL THE FINAL HARDWARE CONFIGURATION.

PLC - CONDUIT STUB LAYOUT DETAIL

NOT TO SCALE E07-13 070103

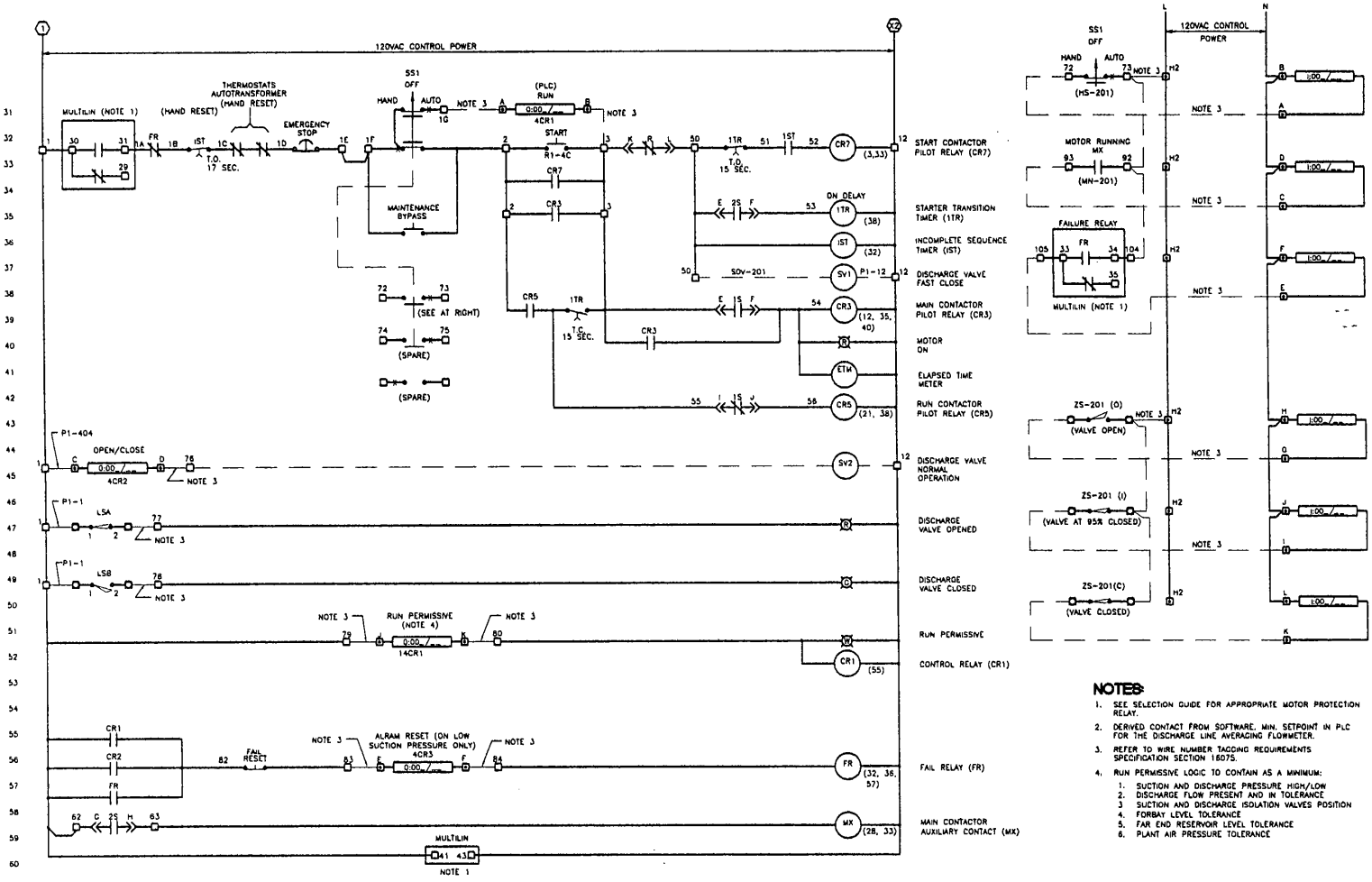

NOTES:

1. SEE SELECTION GUIDE FOR APPROPRIATE MOTOR PROTECTION RELAY.
2. DERIVED CONTACT FROM SOFTWARE, MIN. SETPOINT IN PLC FOR THE DISCHARGE LINE AVERAGING FLOWMETER.
3. REFER TO WIRE NUMBER TAGGING REQUIREMENTS SPECIFICATION SECTION 16075.
4. RUN PERMISSIVE LOGIC TO CONTAIN AS A MINIMUM:
   1. SUCTION AND DISCHARGE PRESSURE HIGH/LOW
   2. DISCHARGE FLOW PRESENT AND IN TOLERANCE
   3. SUCTION AND DISCHARGE ISOLATION VALVES POSITION
   4. FORBAY LEVEL TOLERANCE
   5. FAR END RESERVOIR LEVEL TOLERANCE
   6. PLANT AIR PRESSURE TOLERANCE

CONTROL TERMINATION TABLES

ZONE PUMP	PLC CABINET "RUN" TERMINALS A B	PLC CABINET "RUN" I/O POINT	PLC CABINET "OPEN/CLOSE" TERMINALS C D	PLC CABINET "OPEN/CLOSE" I/O POINT	PLC CABINET "ALARM RESET" TERMINALS E F	PLC CABINET "ALARM RESET" I/O POINT	PLC CABINET "LOW SUCTION" TERMINALS G H	PLC CABINET "LOW SUCTION" I/O POINT	PLC CABINET "VALVE SEQ" TERMINALS J K	PLC CABINET "VALVE SEQ" I/O POINT	PLC CABINET "LOCAL/REMOTE" DEVICE	PLC CABINET "LOCAL/REMOTE" PLC TERM A B	PLC CABINET "LOCAL/REMOTE" I/O POINT	PLC CABINET "RUNNING" DEVICE	PLC CABINET "RUNNING" PLC TERM C D	PLC CABINET "RUNNING" I/O POINT	PLC CABINET "FAILURE" DEVICE	PLC CABINET "FAILURE" PLC TERM E F	PLC CABINET "FAILURE" I/O POINT	PLC CABINET "DISCH VALVE" (OPEN) DEVICE	PLC CABINET "DISCH VALVE" (OPEN) PLC TERM O M	PLC CABINET "DISCH VALVE" (OPEN) I/O POINT	PLC CABINET "DISCH VALVE" (INTERM.) DEVICE	PLC CABINET "DISCH VALVE" (INTERM.) PLC TERM I J	PLC CABINET "DISCH VALVE" (INTERM.) I/O POINT	PLC CABINET "DISCH VALVE" (CLOSED) DEVICE	PLC CABINET "DISCH VALVE" (CLOSED) PLC TERM X L	PLC CABINET "DISCH VALVE" (CLOSED) I/O POINT	PLC CABINET "FLOW" DEVICE	PLC CABINET "FLOW" PLC TERM M N	PLC CABINET "FLOW" I/O POINT
P1		O:00./__		O:00./__		O:00./__		O:00./__		O:00./__	HS-201		I:000/02	MN-201		I:000/07	MF-201		I:000/01	ZS-201(O)		I:000/03	ZS-201(I)		I:000/04	ZS-201(C)			FS-201		I:000/06
P2		O:00./__		O:00./__		O:00./__		O:00./__		O:00./__	HS-202		I:000/11	MN-202		I:000/07	MF-202		I:000/10	ZS-202(O)		I:000/12	ZS-202(I)		I:000/13	ZS-202(C)			FS-202		I:000/15
P3		O:00./__		O:00./__		O:00./__		O:00./__		O:00./__	HS-203		I:001/00	MN-203		I:000/16	MF-203		I:000/17	ZS-203(O)		I:001/01	ZS-203(I)		I:001/02	ZS-203(C)			FS-203		I:001/04
P4		O:00./__		O:00./__		O:00./__		O:00./__		O:00./__	HS-204		I:001/07	MN-204		I:001/05	MF-204		I:001/06	ZS-204(O)		I:001/10	ZS-204(I)		I:001/11	ZS-204(C)			FS-204		I:001/13
P5		O:00./__		O:00./__		O:00./__		O:00./__		O:00./__	HS-205		I:001/16	MN-205		I:001/14	MF-205		I:001/15	ZS-205(O)		I:001/17	ZS-205(I)		I:002/00	ZS-205(C)			FS-205		I:002/02
P6		O:00./__		O:00./__		O:00./__		O:00./__		O:00./__	HS-206		I:002/05	MN-206		I:002/03	MF-206		I:002/04	ZS-206(O)		I:002/06	ZS-206(I)		I:002/07	ZS-206(C)			FS-206		I:002/11
P7		O:00./__		O:00./__		O:00./__		O:00./__		O:00./__	HS-207		I:002/14	MN-207		I:002/12	MF-207		I:002/13	ZS-207(O)		I:002/15	ZS-207(I)		I:002/16	ZS-207(C)			FS-207		I:003/00
P8		O:00./__		O:00./__		O:00./__		O:00./__		O:00./__	HS-208		I:003/03	MN-208		I:003/01	MF-208		I:003/02	ZS-208(O)		I:003/04	ZS-208(I)		I:003/05	ZS-208(C)			FS-208		I:003/07
	TO BE FURNISHED BY ENGINEER		TO BE FURNISHED BY ENGINEER		TO BE FURNISHED BY ENGINEER		TO BE FURNISHED BY ENGINEER		TO BE FURNISHED BY ENGINEER		TO BE FURNISHED BY ENGINEER			TO BE FURNISHED BY ENGINEER			TO BE FURNISHED BY ENGINEER			TO BE FURNISHED BY ENGINEER			TO BE FURNISHED BY ENGINEER			TO BE FURNISHED BY ENGINEER			TO BE FURNISHED BY ENGINEER		

PLC OUTPUTS (CONTROL FROM PLC) — PLC INPUTS (STATUS TO PLC)

FOR EXAMPLE ONLY

FINAL HARDWARE CONFIGURATION WILL VARY ACCORDING TO SPECIFIC CONTRACT REQUIREMENTS. NO ATTEMPT HAS BEEN MADE TO DETAIL THE FINAL HARDWARE ARRANGEMENT.

5K ZONE PUMP CONTROL SCHEMATIC I (WITH AUTO TRANSFORMER)

NOT TO SCALE E07-17 111703

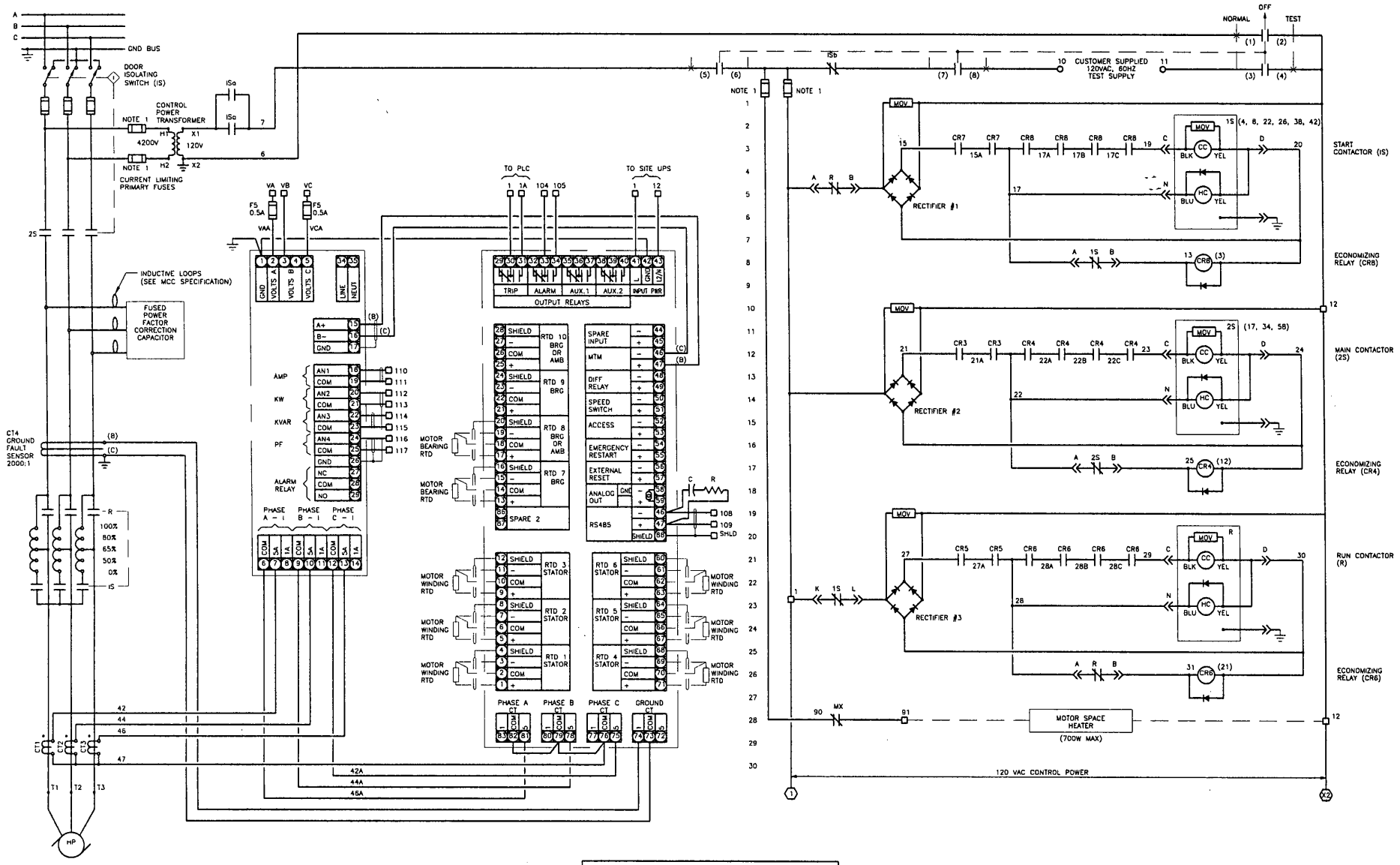

5KV ZONE PUMP STARTER

FOR EXAMPLE ONLY

FINAL HARDWARE CONFIGURATION WILL VARY ACCORDING TO SPECIFIC CONTRACT REQUIREMENTS. NO ATTEMPT HAS BEEN MADE TO DETAIL THE FINAL HARDWARE ARRANGEMENT.

NOTES:

1. FUSE SIZE TO BE FURNISHED BY MOTOR CONTROL CENTER SUPPLIER.

5K ZONE PUMP CONTROL SCHEMATIC II (WITH AUTO TRANSFORMER)

NOT TO SCALE E07-18 111703

SLOT NUMBER

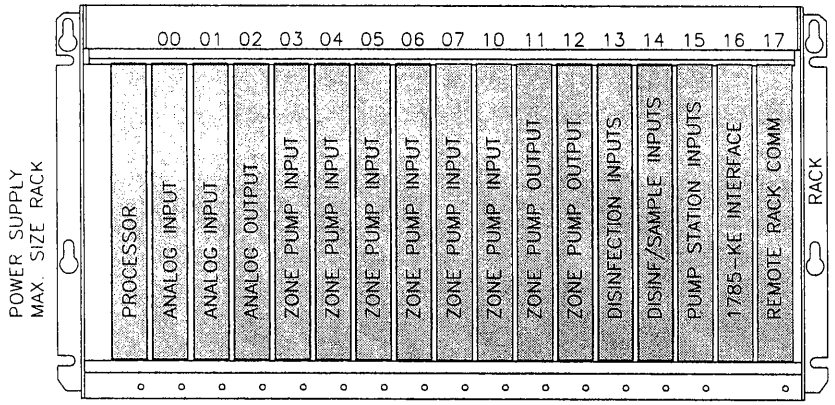

PLC RACK LOCATOR

DESIGNER NOTE:
MODIFY FOR REMOTE RACK CONFIGURATION AS REQUIRED

SLOT NUMBER

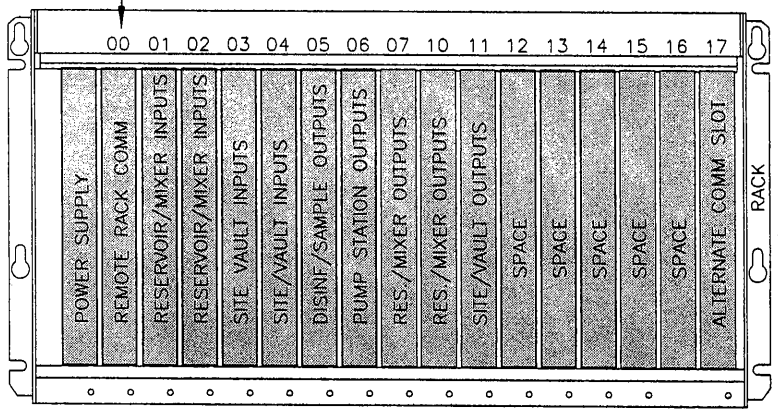

RESERVOIR AND PUMP STATION I/O ORGANIZED ACROSS 2 FULL RACKS (PREFERRED ORGANIZATION WHEN PUMP STATION AND RESERVOIR ARE CONCURRENTLY BUILT).

PLC RACK LOCATOR

FOR EXAMPLE ONLY

FINAL HARDWARE CONFIGURATION WILL VARY ACCORDING TO SPECIFIC CONTRACT REQUIREMENTS. NO ATTEMPT HAS BEEN MADE TO DETAIL THE FINAL PROGRAM LOGIC.

PLC MULTIPLE RACK CONFIGURATION

NOT TO SCALE E07-19 111703

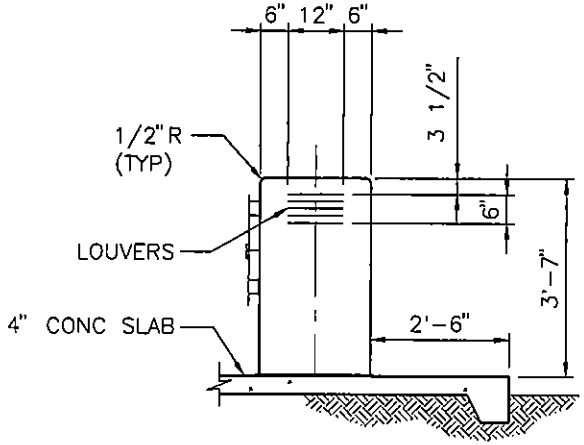

SIDE ELEVATION

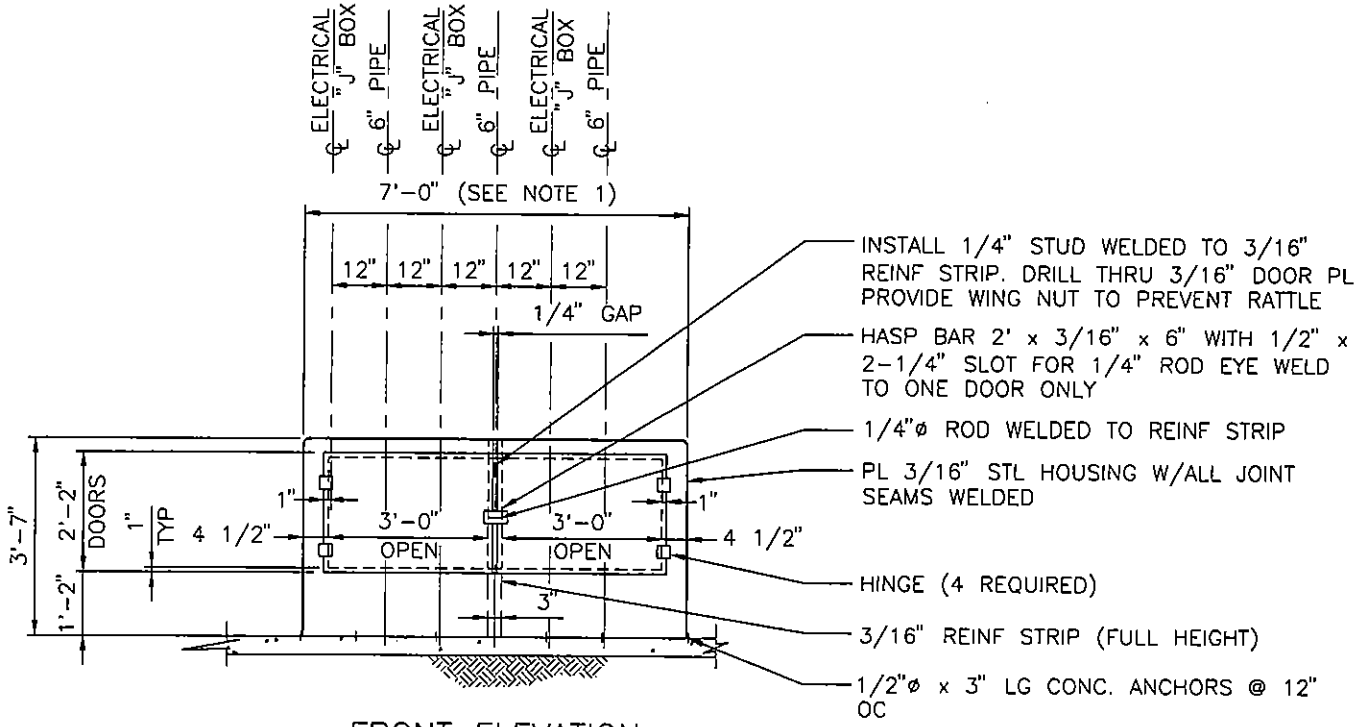

FRONT ELEVATION

NOTES:

1. ADJUST ENCLOSURE WIDTH TO MATCH NUMBER OF FLANGES REQUIRED.

2. GALVANIZE AFTER FABRICATION (TYP)

RESERVOIR INSTRUMENT HOUSING

NOT TO SCALE E08-1 070103

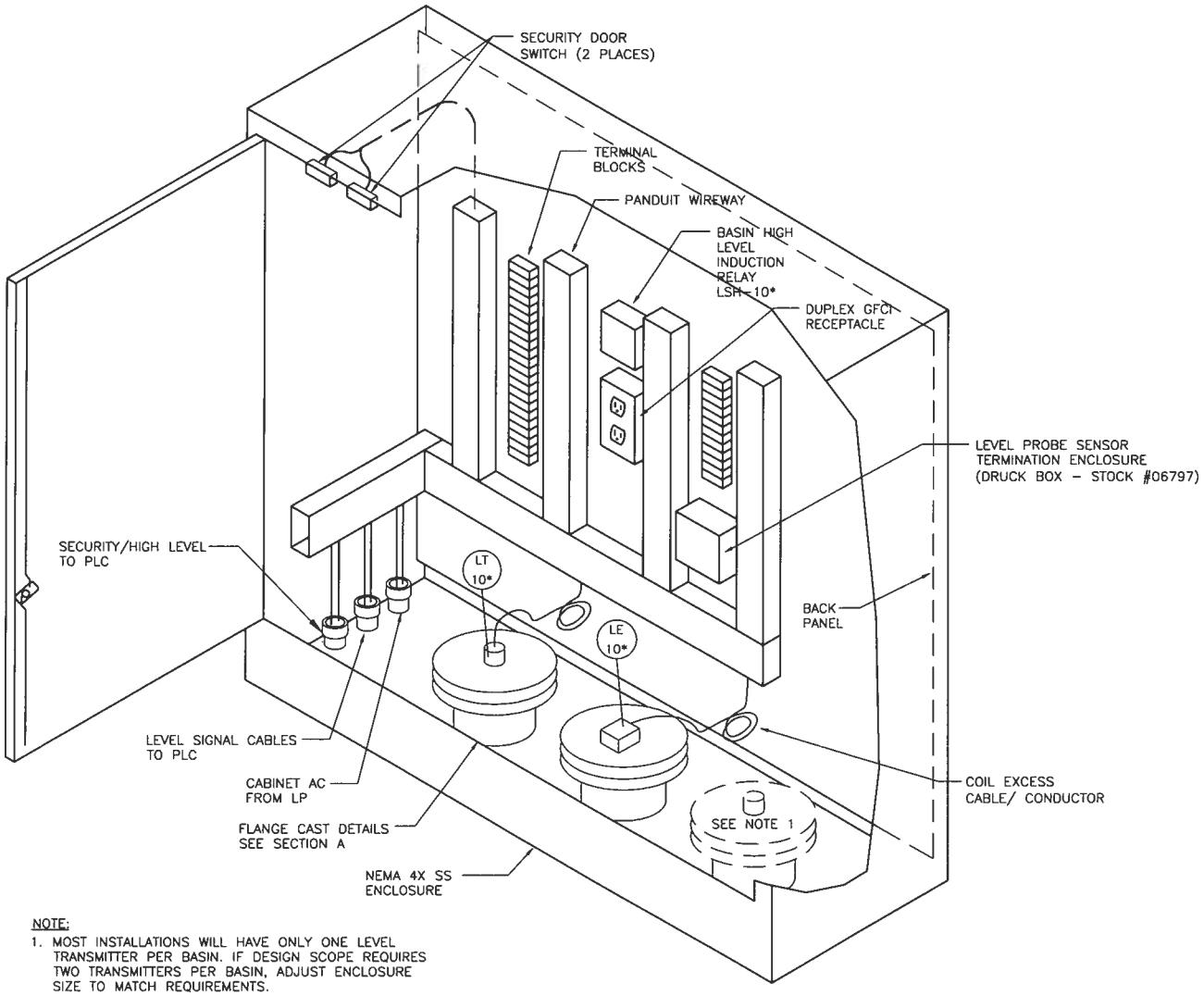

NOTE:

1. MOST INSTALLATIONS WILL HAVE ONLY ONE LEVEL TRANSMITTER PER BASIN. IF DESIGN SCOPE REQUIRES TWO TRANSMITTERS PER BASIN, ADJUST ENCLOSURE SIZE TO MATCH REQUIREMENTS.

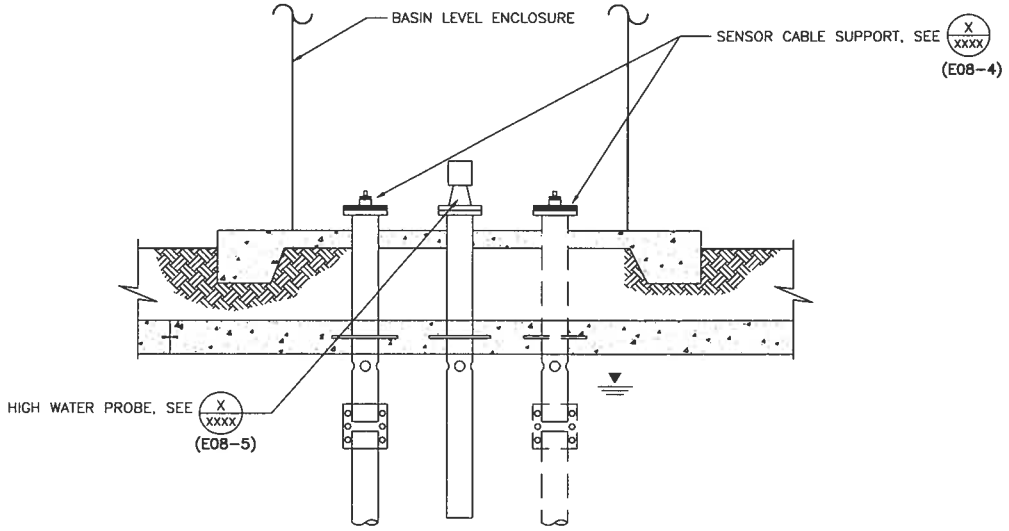

SECTION A

RESERVOIR BASIN LEVEL ENCLOSURE LAYOUT

NOT TO SCALE E08-2 091008

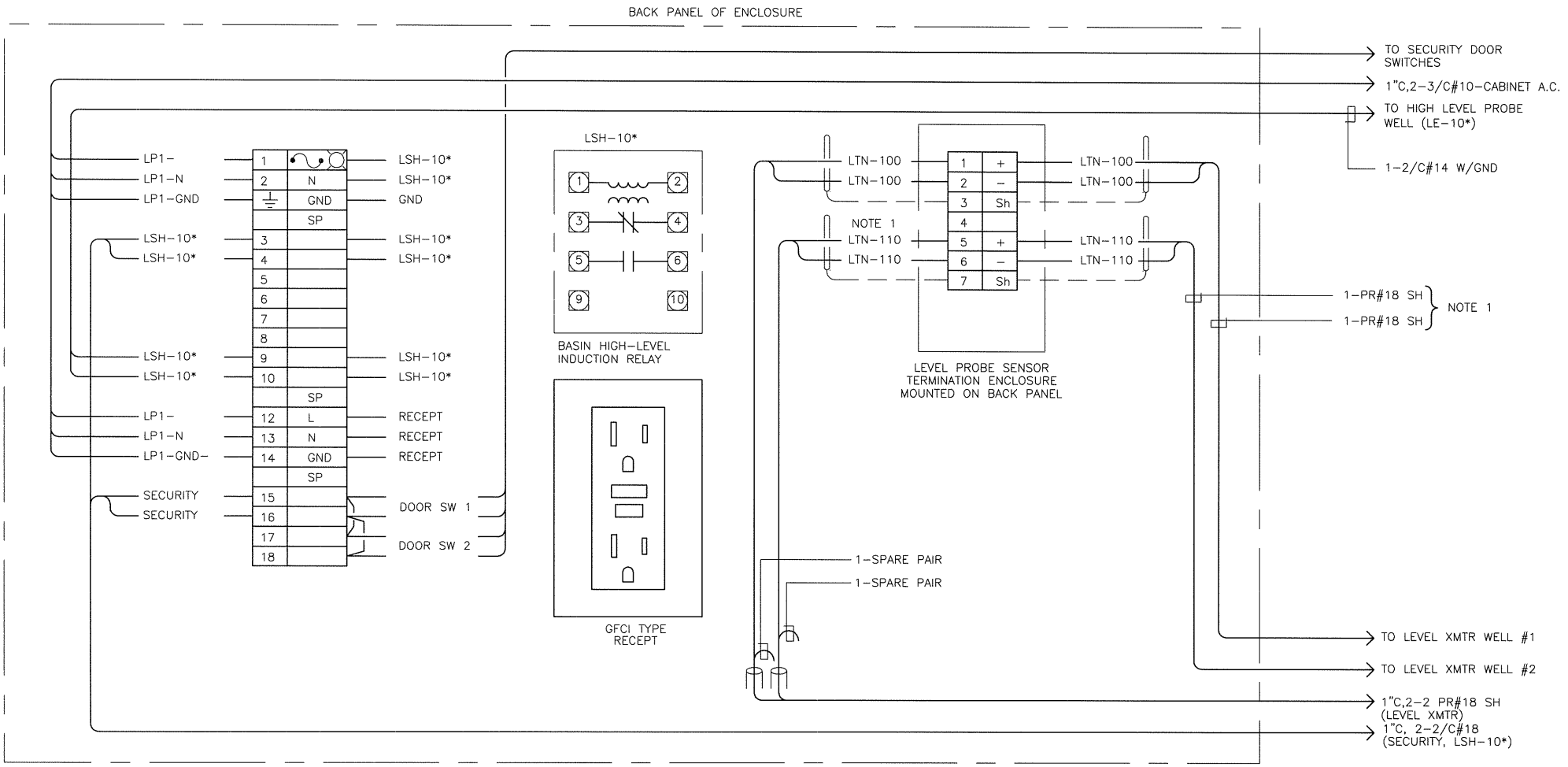

NOTES:

1. LEVEL TRANSMITTER CABLE IS FURNISHED WITH THE TRANSMITTER.

RESERVOIR BASIN LEVEL ENCLOSURE WIRING

NOT TO SCALE E08-3 100608

BILL OF MATERIALS

◯	QTY	ITEM #	DESCRIPTION
1	1	21836	$\frac{1}{2}$" CGB PVC STRAIN RELIEF
2	1	09704	2" SLIP TO $\frac{1}{2}$" NPT PVC REDUCER
3	1	08012	2" NPT TO 2" SLIP PVC ADAPTER
4	1	–	6" BLIND PVC FLANGE w/ 2" NPT THREADED HOLE IN THE CENTER
5	1	–	6" PVC VAN STONE FLANGE w/ PLASTIC RING
6	1	–	6" NEOPRENE GASKET FLG
7	1	–	6" 316 SS PIPE w/ 6 $\frac{5}{8}$" OD
8	4	–	$\frac{3}{4}$"X4" STAINLESS BOLT w/ NUTS

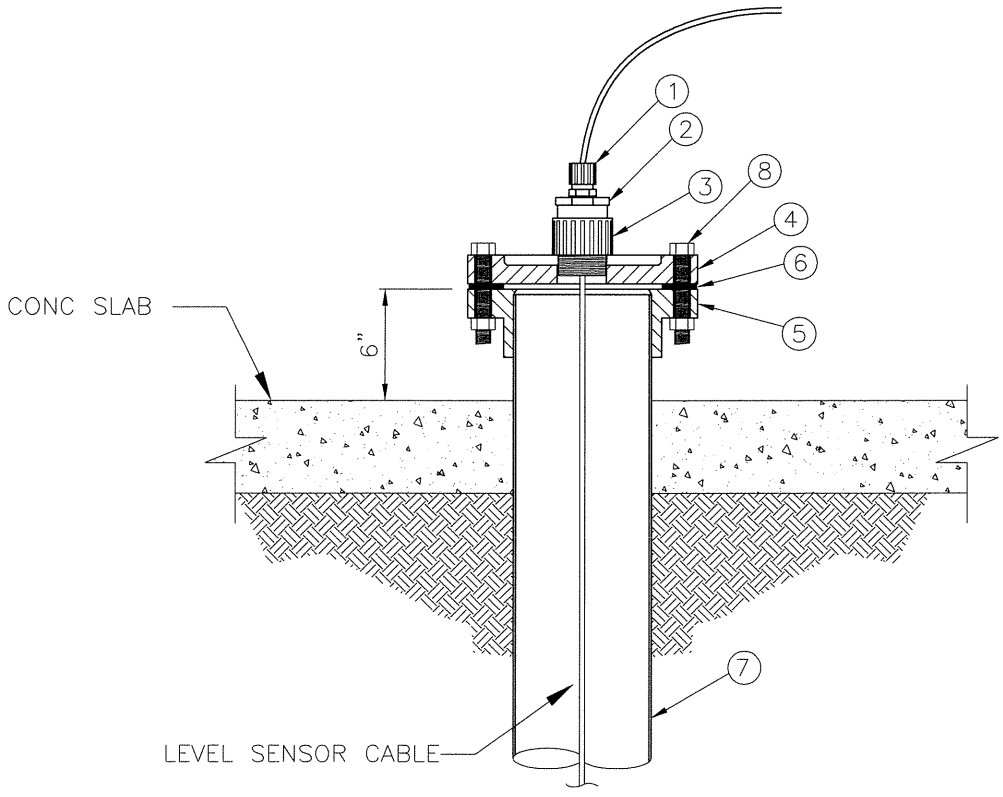

RESERVOIR BASIN LEVEL ENCLOSURE CABLE SUPPORT

NOT TO SCALE E08–4 100608

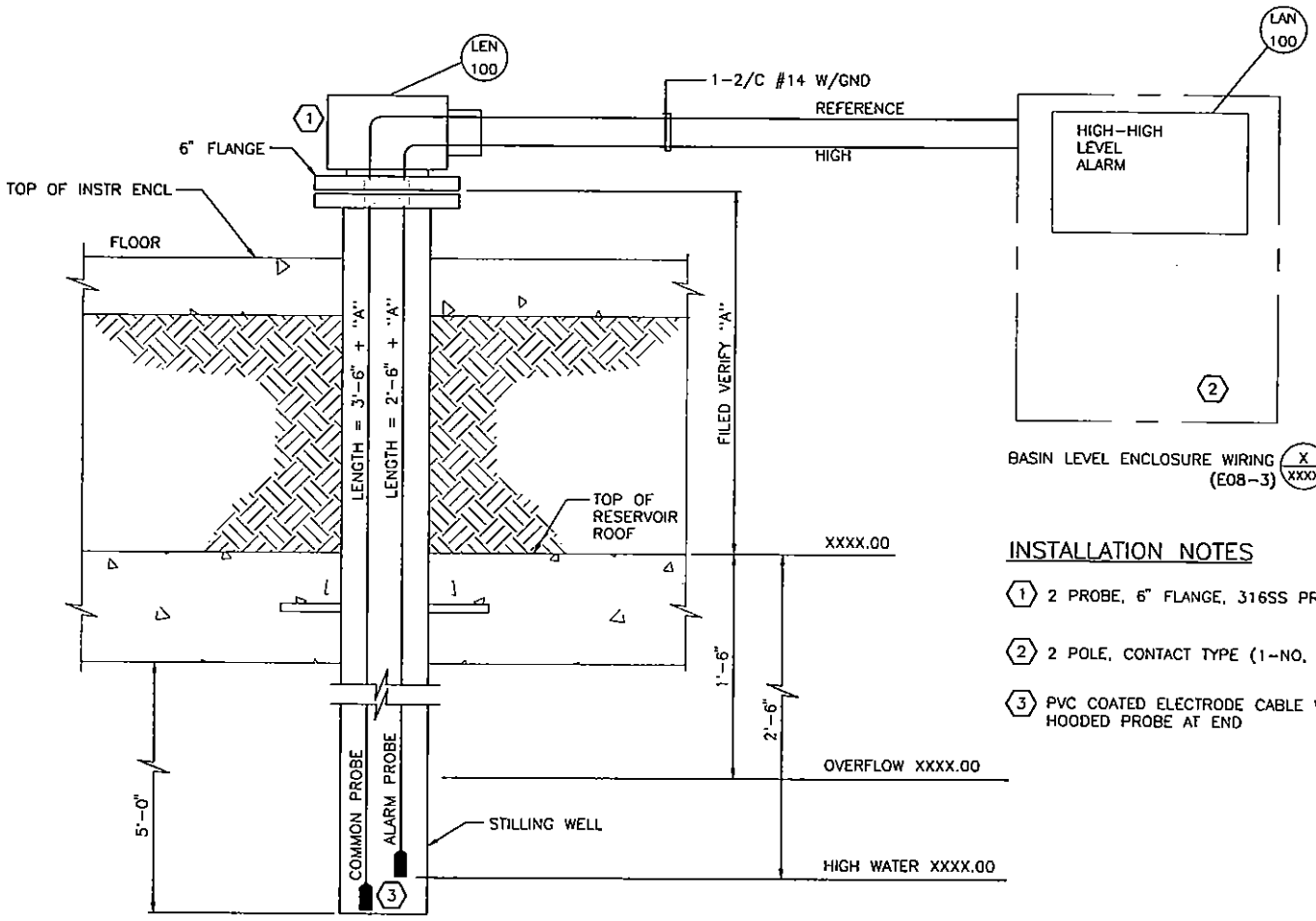

INSTALLATION NOTES

1. 2 PROBE, 6" FLANGE, 316SS PROBE HOUSING
2. 2 POLE, CONTACT TYPE (1-NO, 1-NC)
3. PVC COATED ELECTRODE CABLE WITH HOODED PROBE AT END

RESERVOIR HIGH WATER PROBE INSTALLATION

NOT TO SCALE E08-5 070103

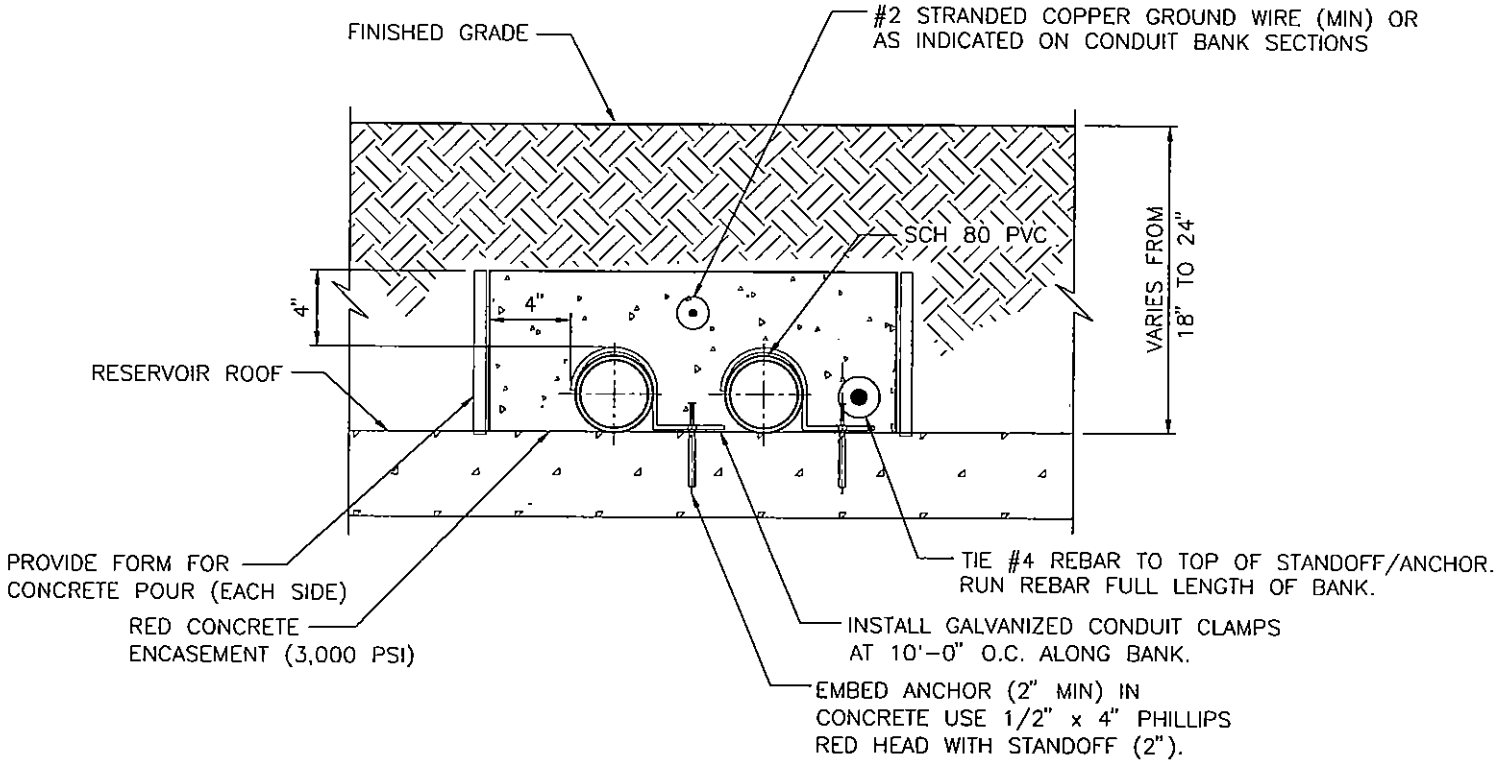

RESERVOIR ROOF CONDUIT BANK DETAIL

NOT TO SCALE E08-6 070103

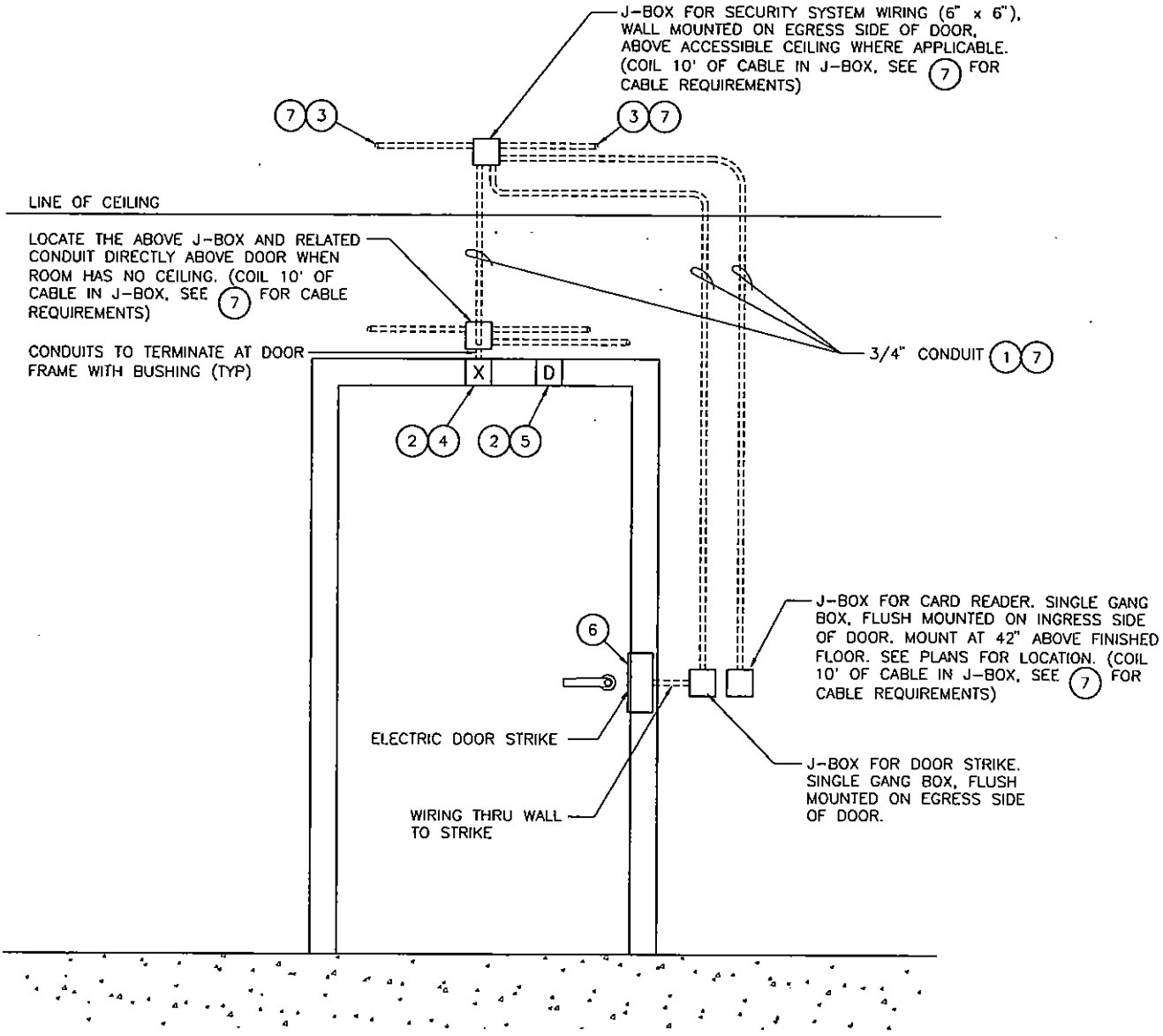

NOTES:

1. CONCEAL CONDUIT IN WALL AT NEW CONSTRUCTION AND AT EXISTING FRAME CONSTRUCTION; SURFACE MOUNT ON INTERIOR FACE AT EXISTING MASONRY.
2. REQUEST TO EXIT AND DOOR POSITION SWITCH PROVIDED, MOUNTED AND TERMINATED BY SECURITY SYSTEM VENDOR.
3. SEE PLAN FOR CONTINUATION.
4. MOTION DETECTOR MOUNTED ON EGRESS SIDE OF THE DOOR FRAME BY SECURITY SYSTEM VENDOR.
5. DPS (DOOR POSITION SWITCH) MOUNTED IN FRAME HEADER, 10" FROM CENTER OF FRAME, TOWARD DOOR STRIKE.
6. PREPARE NEW DOORS (OR REWORK EXISTING DOORS AND FRAMES) TO RECEIVE NEW DOOR HARDWARE AS SCHEDULED.
7. REFER TO SPECIFICATION SECTION 08710 FOR CABLE REQUIREMENTS.

SINGLE DOOR SECURITY SYSTEM (ELECTRICAL STRIKE)

NOT TO SCALE E09-1 070103

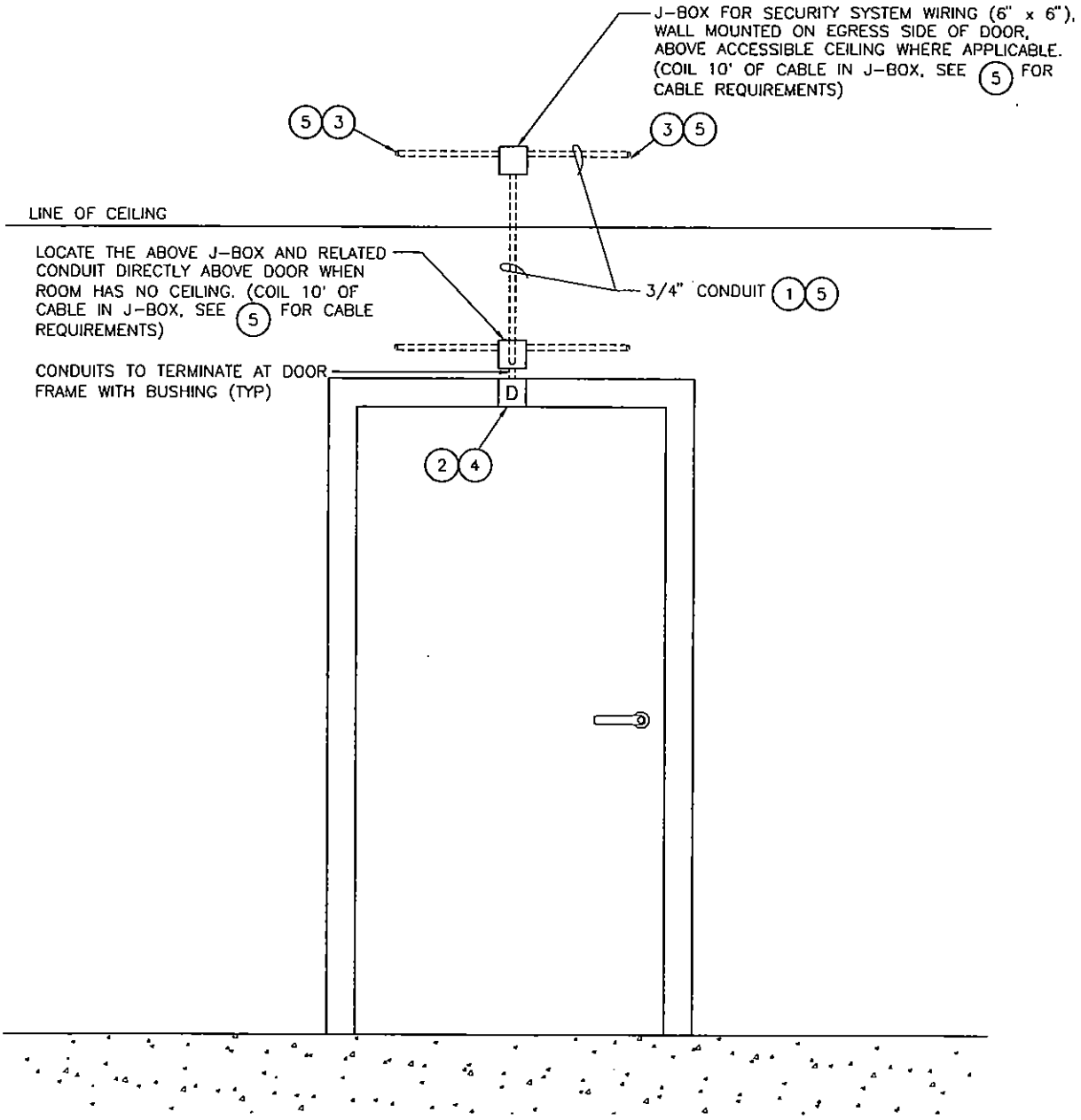

NOTES:

1. CONCEAL CONDUIT IN WALL AT NEW CONSTRUCTION AND AT EXISTING FRAME CONSTRUCTION; SURFACE MOUNT ON INTERIOR FACE AT EXISTING MASONRY.
2. DOOR POSITION SWITCH PROVIDED, MOUNTED AND TERMINATED BY SECURITY SYSTEM VENDOR.
3. SEE PLAN FOR CONTINUATION.
4. DPS (DOOR POSITION SWITCH) MOUNTED IN FRAME HEADER, 10" FROM CENTER OF FRAME, TOWARD DOOR STRIKE.
5. REFER TO SPECIFICATION SECTION 08710 FOR CABLE REQUIREMENTS.

SINGLE DOOR SECURITY SYSTEM (MONITORED DOORWAY)

NOT TO SCALE

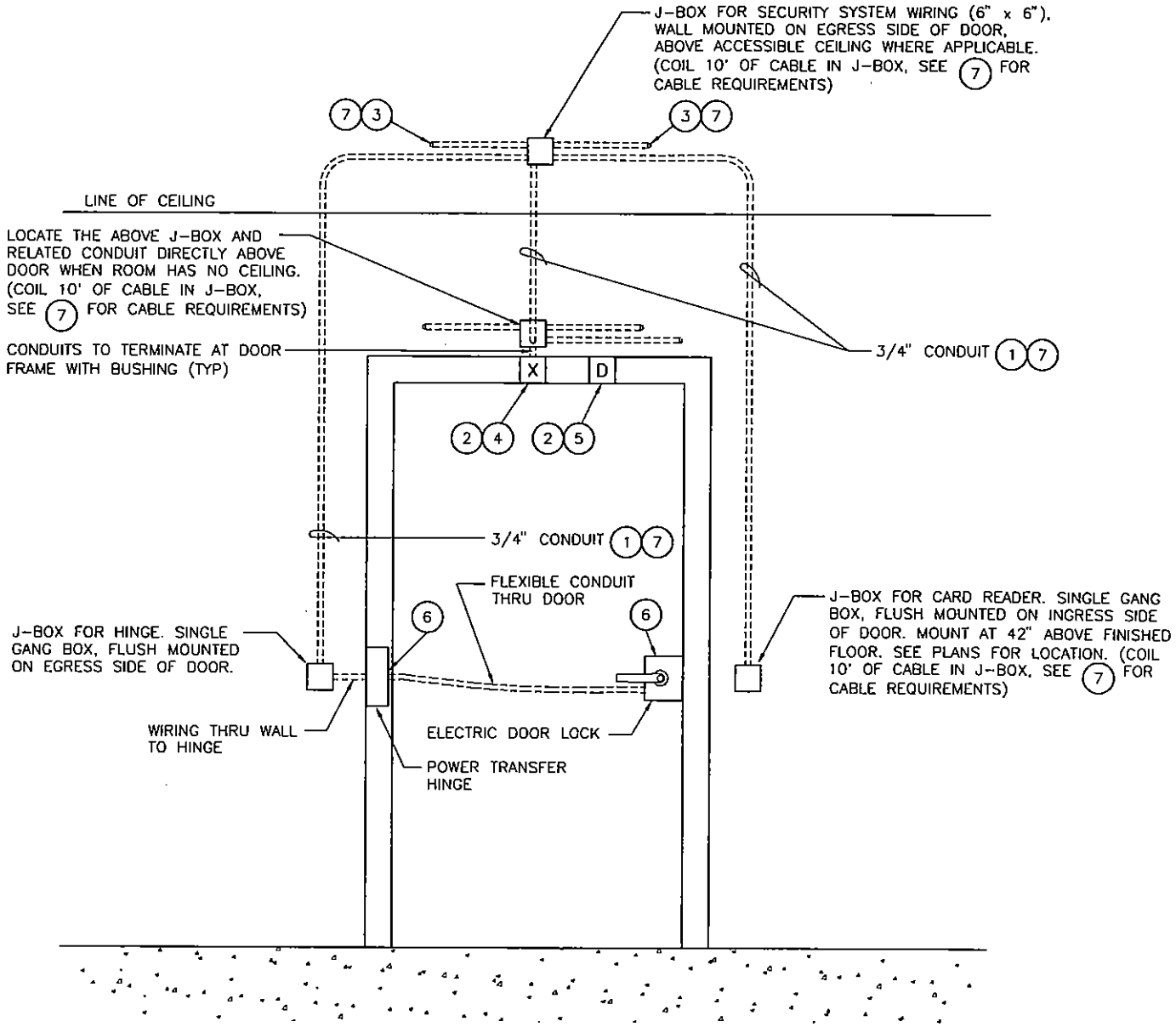

NOTES:

1. CONCEAL CONDUIT IN WALL AT NEW CONSTRUCTION AND AT EXISTING FRAME CONSTRUCTION; SURFACE MOUNT ON INTERIOR FACE AT EXISTING MASONRY.
2. REQUEST TO EXIT AND DOOR POSITION SWITCH PROVIDED, MOUNTED AND TERMINATED BY SECURITY SYSTEM VENDOR.
3. SEE PLAN FOR CONTINUATION.
4. MOTION DETECTOR MOUNTED ON EGRESS SIDE OF THE DOOR FRAME BY SECURITY SYSTEM VENDOR.
5. DPS (DOOR POSITION SWITCH) MOUNTED IN FRAME HEADER, 10" FROM CENTER OF FRAME, TOWARD DOOR STRIKE.
6. PREPARE NEW DOORS TO RECEIVE NEW DOOR HARDWARE AS SCHEDULED.
7. REFER TO SPECIFICATION SECTION 08710 FOR CABLE REQUIREMENTS.

SINGLE DOOR SECURITY SYSTEM (ELECTRICAL LOCK)

NOT TO SCALE

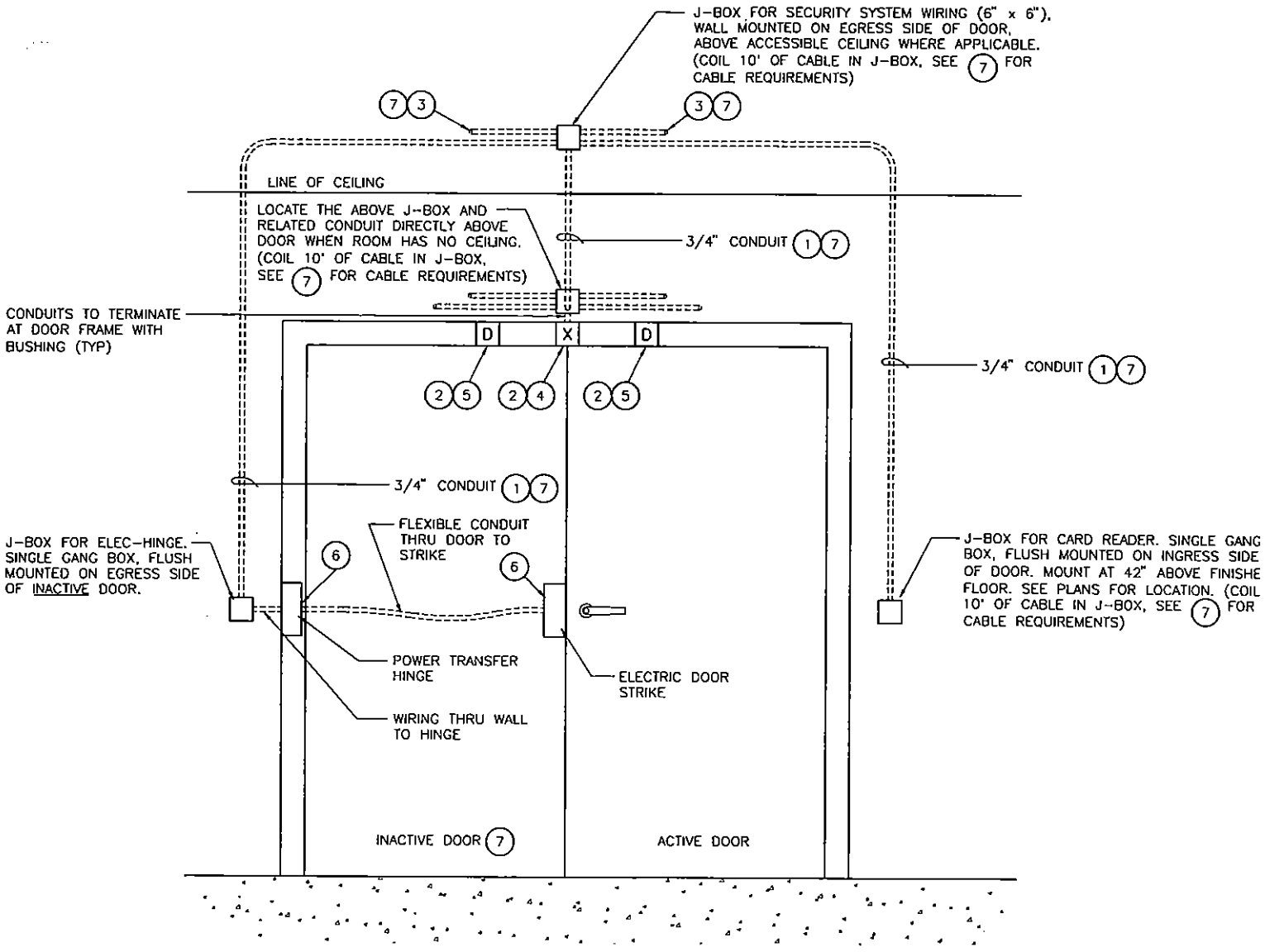

NOTES:

1. CONCEAL CONDUIT IN WALL AT NEW CONSTRUCTION AND AT EXISTING FRAME CONSTRUCTION; SURFACE MOUNT ON INTERIOR FACE AT EXISTING MASONRY.
2. REQUEST TO EXIT AND DOOR POSITION SWITCH PROVIDED, MOUNTED AND TERMINATED BY SECURITY SYSTEM VENDOR.
3. SEE PLAN FOR CONTINUATION.
4. MOTION DETECTOR MOUNTED ON EGRESS SIDE OF THE DOOR FRAME BY SECURITY SYSTEM VENDOR.
5. DPS (DOOR POSITION SWITCH) MOUNTED IN FRAME HEADER, 10" FROM CENTER OF FRAME, TOWARD DOOR STRIKE.
6. PREPARE NEW DOORS (OR REWORK EXISTING DOORS AND FRAMES) TO RECEIVE NEW DOOR HARDWARE AS SCHEDULED.
7. REFER TO SPECIFICATION SECTION 08710 FOR CABLE AND DOOR HARDWARE REQUIREMENTS.

DOUBLE DOOR SECURITY SYSTEM (ELECTRICAL STRIKE)

NOT TO SCALE E09-4 070103

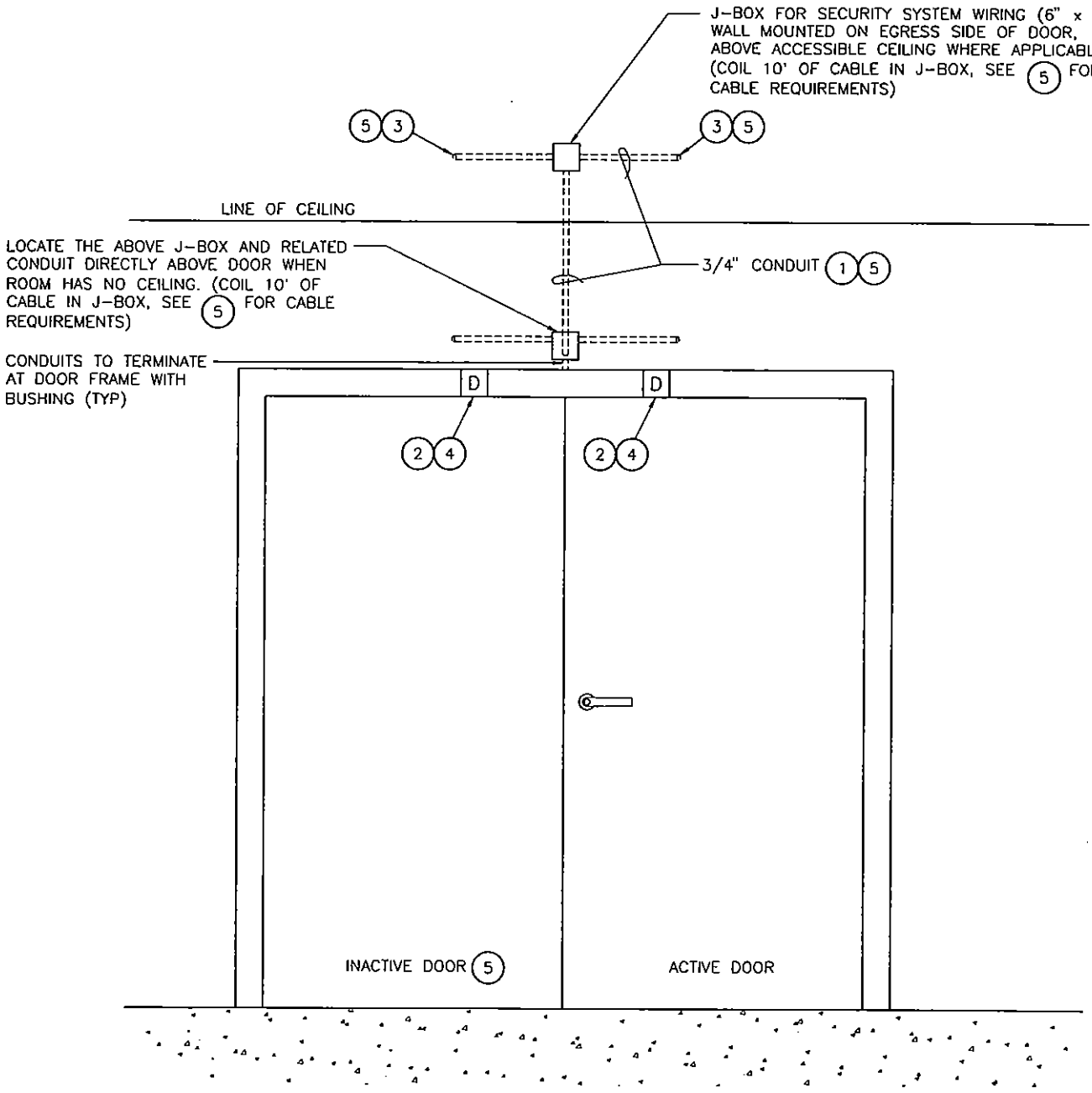

NOTES:

1. CONCEAL CONDUIT IN WALL AT NEW CONSTRUCTION AND AT EXISTING FRAME CONSTRUCTION; SURFACE MOUNT ON INTERIOR FACE AT EXISTING MASONRY.
2. REQUEST TO EXIT AND DOOR POSITION SWITCH PROVIDED, MOUNTED AND TERMINATED BY SECURITY SYSTEM VENDOR.
3. SEE PLAN FOR CONTINUATION.
4. DPS (DOOR POSITION SWITCH) MOUNTED IN FRAME HEADER, 10" FROM CENTER OF FRAME, TOWARD DOOR STRIKE.
5. REFER TO SPECIFICATION SECTION 08710 FOR CABLE AND DOOR HARDWARE REQUIREMENTS.

DOUBLE DOOR SECURITY SYSTEM (MONITORED DOORWAY)

NOT TO SCALE

E09-5 070103

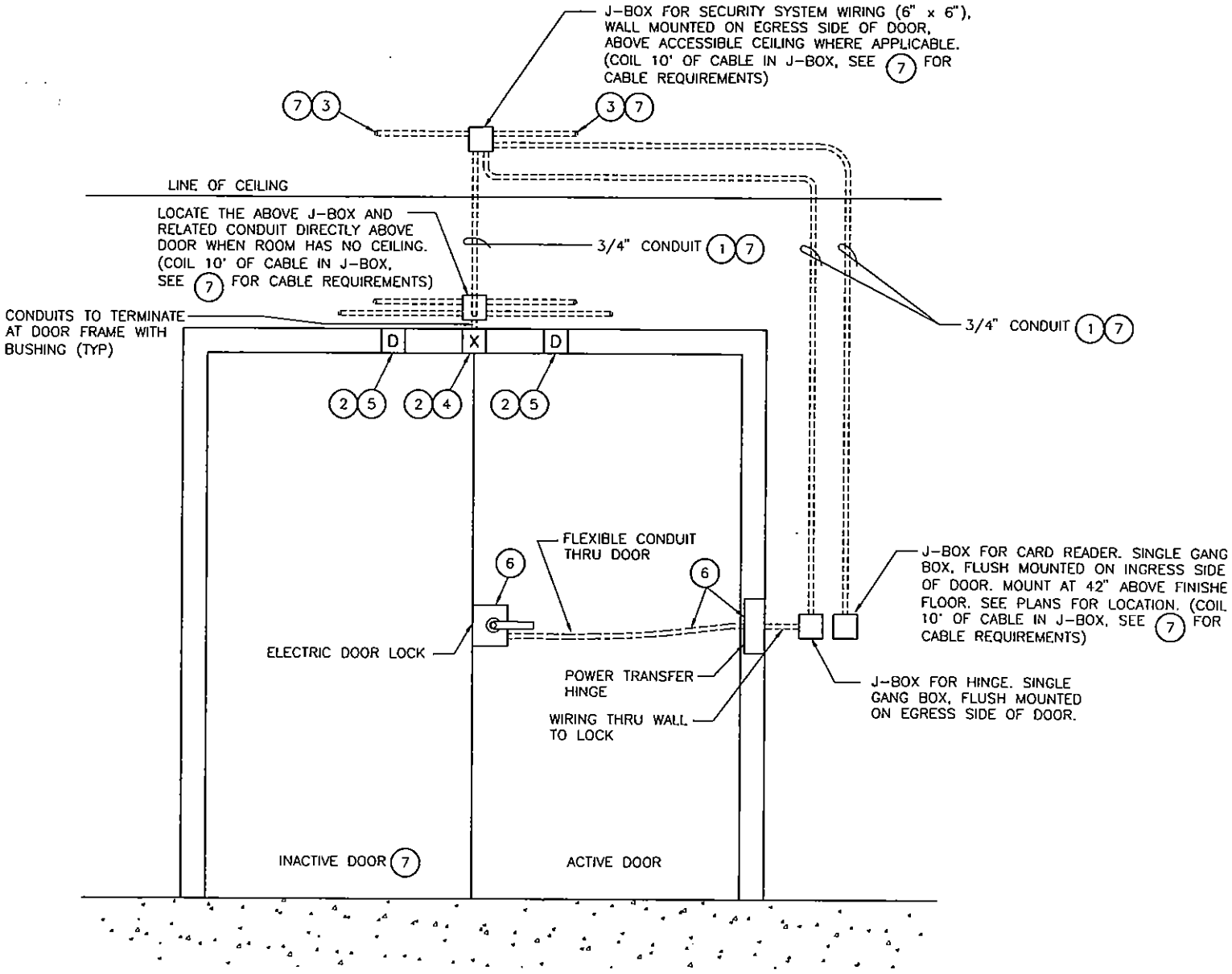

NOTES:

1. CONCEAL CONDUIT IN WALL AT NEW CONSTRUCTION AND AT EXISTING FRAME CONSTRUCTION; SURFACE MOUNT ON INTERIOR FACE AT EXISTING MASONRY.
2. REQUEST TO EXIT AND DOOR POSITION SWITCH PROVIDED, MOUNTED AND TERMINATED BY SECURITY SYSTEM VENDOR.
3. SEE PLAN FOR CONTINUATION.
4. MOTION DETECTOR MOUNTED ON EGRESS SIDE OF THE DOOR FRAME BY SECURITY SYSTEM VENDOR.
5. DPS (DOOR POSITION SWITCH) MOUNTED IN FRAME HEADER, 10" FROM CENTER OF FRAME, TOWARD DOOR STRIKE.
6. PREPARE NEW DOORS (OR REWORK EXISTING DOORS AND FRAMES) TO RECEIVE NEW DOOR HARDWARE AS SCHEDULED.
7. REFER TO SPECIFICATION SECTION 08710 FOR CABLE AND DOOR HARDWARE REQUIREMENTS.

DOUBLE DOOR SECURITY SYSTEM (ELECTRICAL LOCK)

NOT TO SCALE

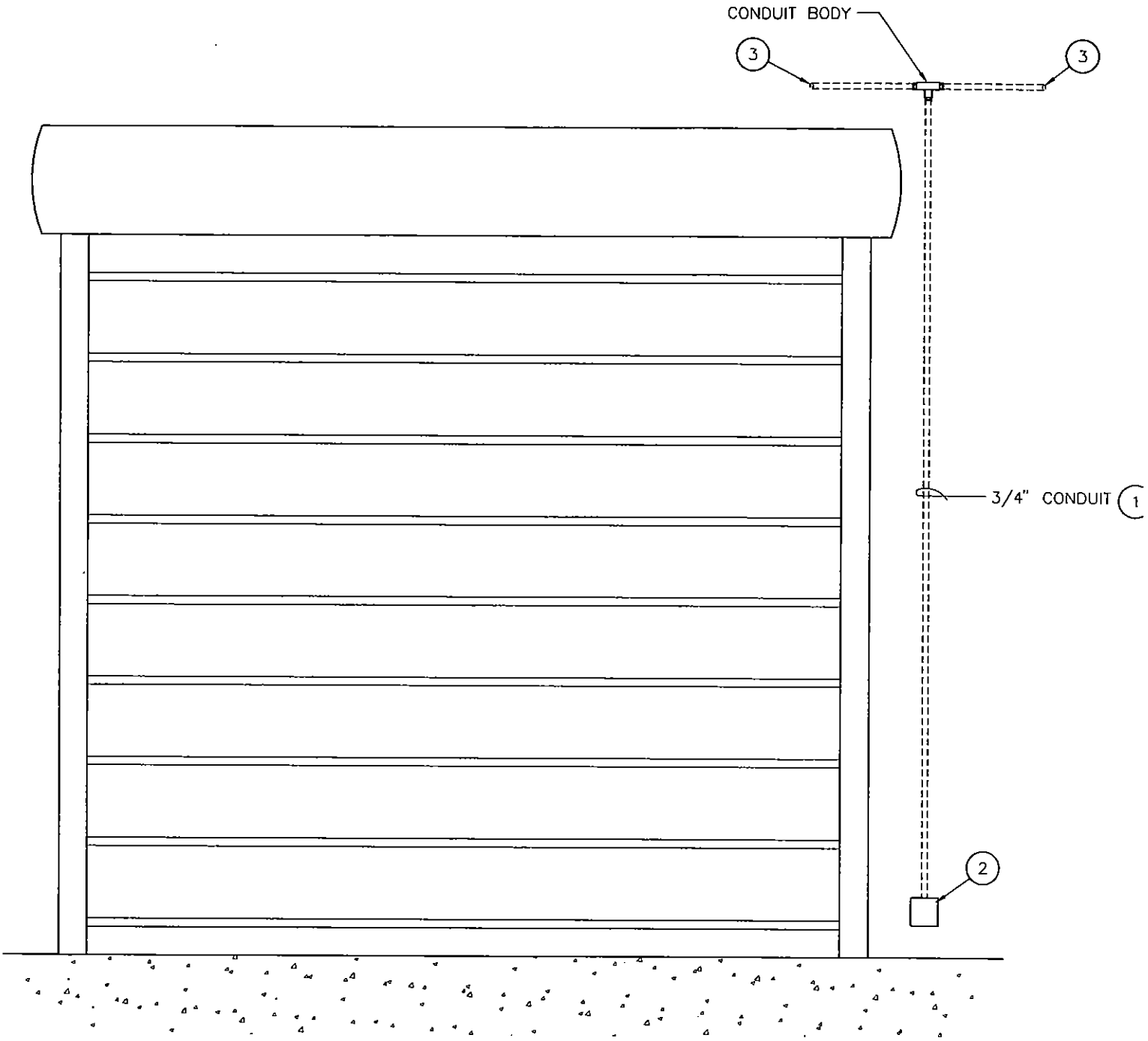

NOTES:

1. CONCEAL CONDUIT IN WALL AT NEW CONSTRUCTION AND AT EXISTING FRAME CONSTRUCTION; SURFACE MOUNT ON INTERIOR FACE AT EXISTING MASONRY.

2. J-BOX (6" x 6") FOR MOUNTING OF POSITION SWITCH. SWITCH INSTALLATION AND TERMINATIONS BY SECURITY SYSTEM VENDOR. SURFACE MOUNT ON INTERIOR WALL 6" ABOVE FINISHED FLOOR. SEE PLAN FOR CONTINUATION.

3. SEE PLAN FOR CONTINUATION.

POSITION SWITCH AT ROLL UP DOOR

NOT TO SCALE

E09-7 070103

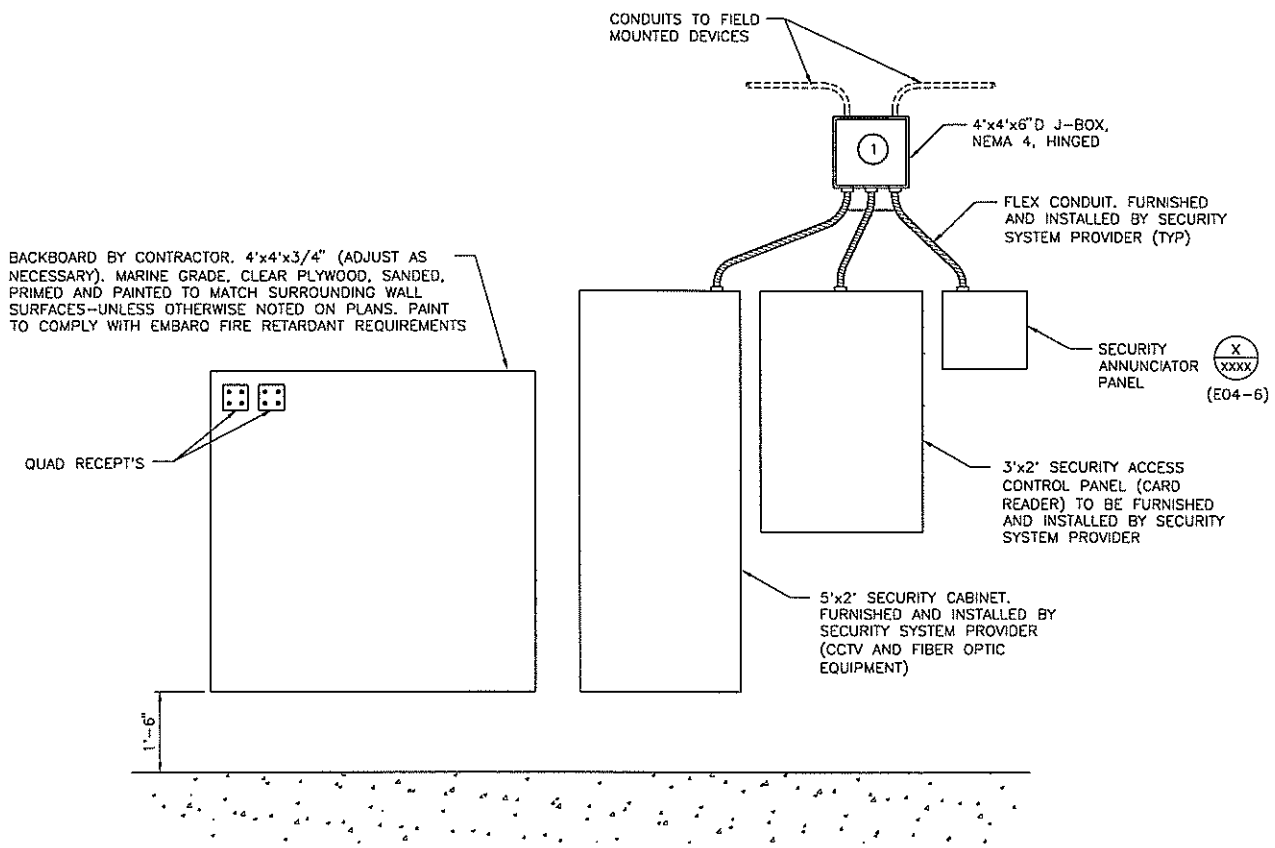

NOTES:

(1) CABLE TO BE PROVIDED BY SECURITY SYSTEM PROVIDER.

TELPHONE/SECURITY SYSTEM COMPONENTS

NOT TO SCALE E09-8 112106

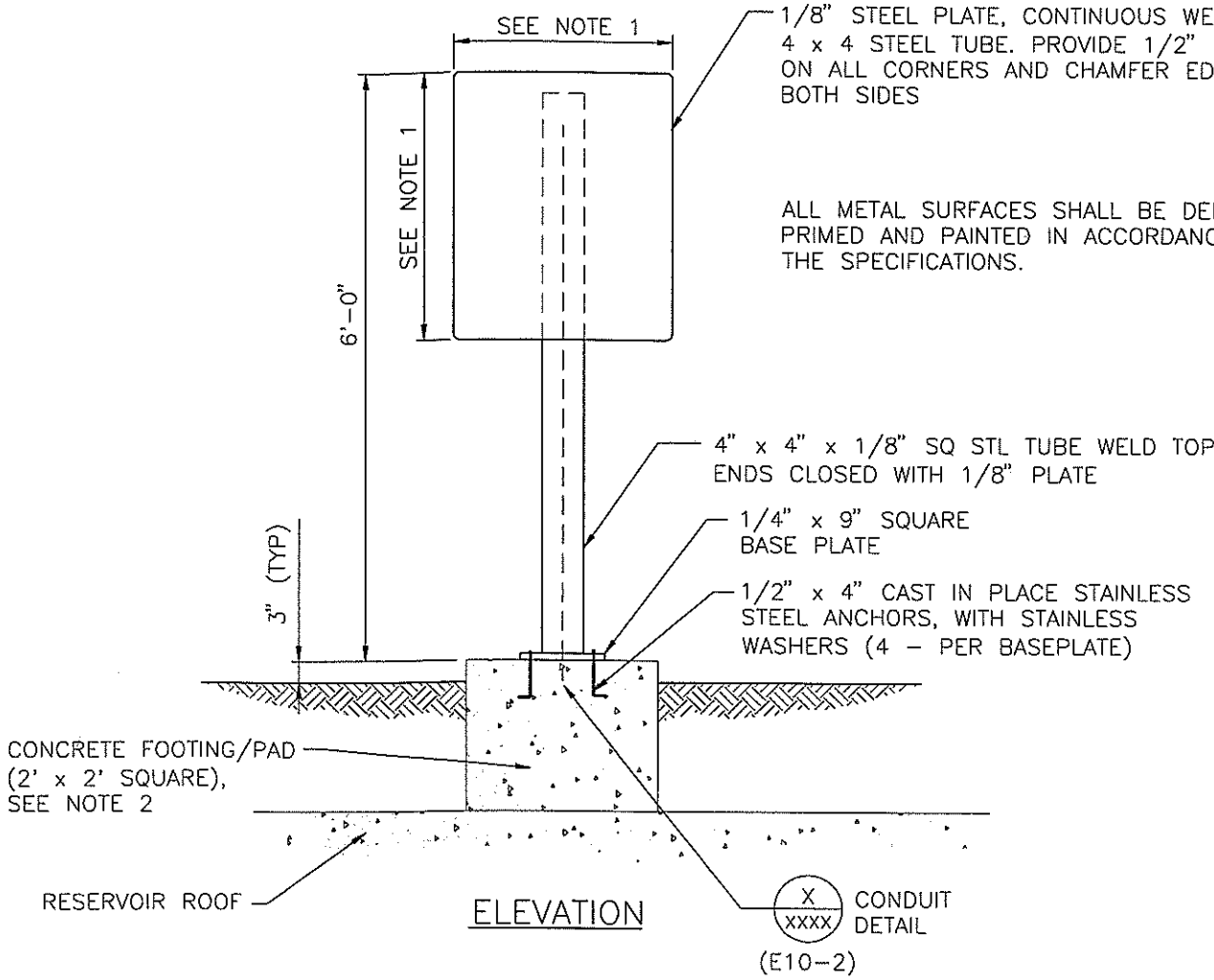

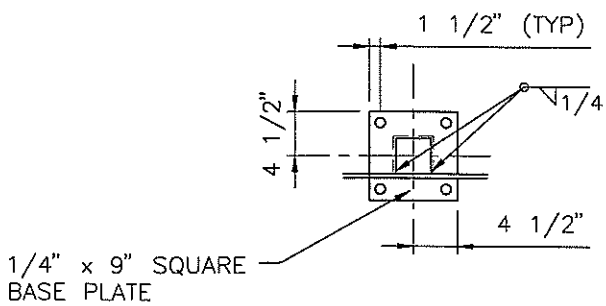

PLAN

NOTES:

1. ACTUAL PANEL DIMENSION SHALL BE A MINIMUM OF 1" GREATER ON ALL SIDES THAN ENCLOSURE(S) MOUNTED ON PANEL.
2. CONCRETE FOOTING/PAD TO BE POURED ON TOP OF RESERVOIR ROOF AS REQUIRED.
3. ALL METAL SURFACES SHALL BE DEBURRED, PRIMED AND PAINTED IN ACCORDANCE WITH THE SPECIFICATIONS.

ENCLOSURE SUPPORT STAND

NOT TO SCALE E10-1 090606

FOR REFERENCE ONLY

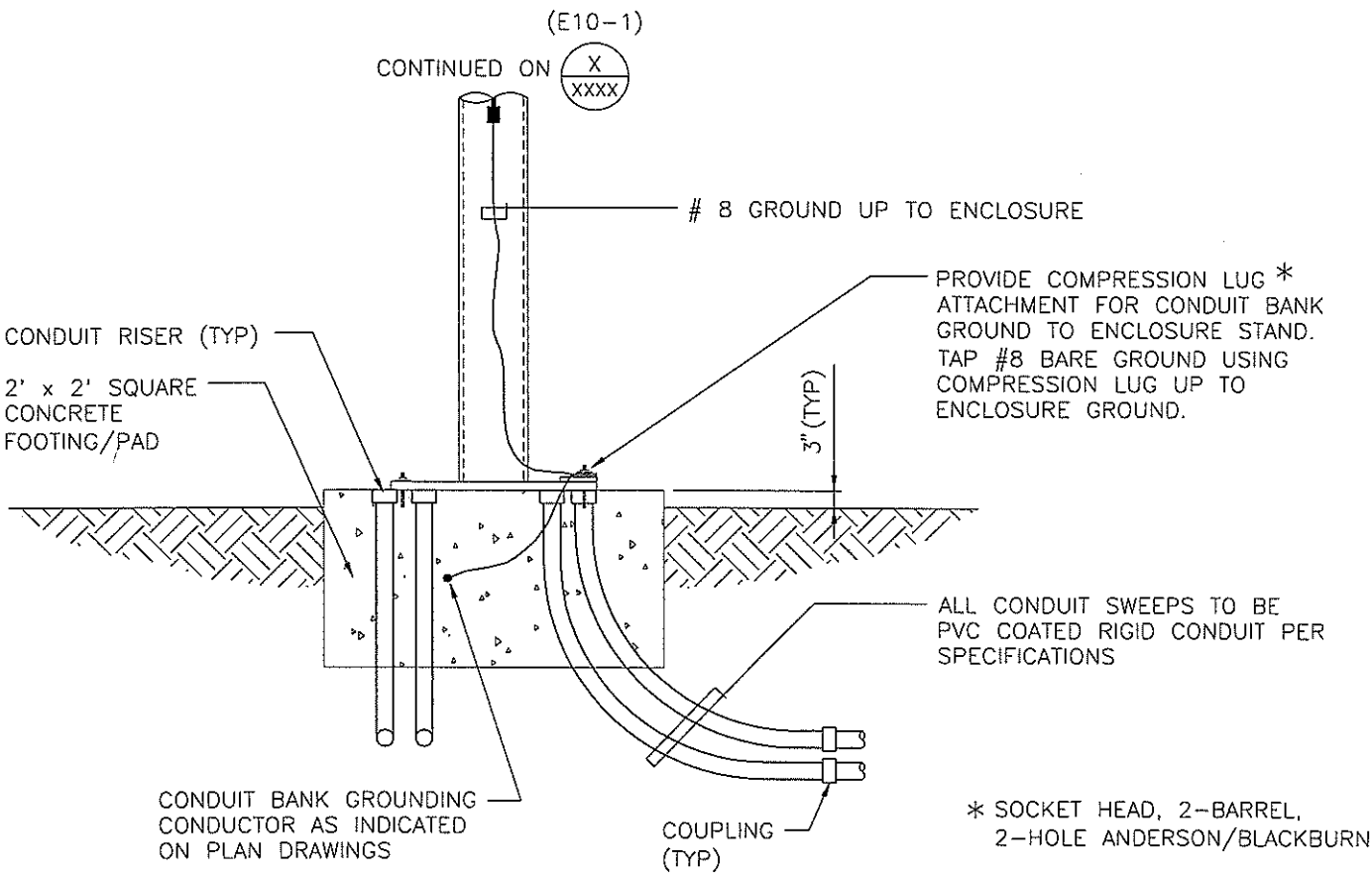

ENCLOSURE SUPPORT STAND CONDUIT

NOT TO SCALE E10-2 090606

FOR REFERENCE ONLY

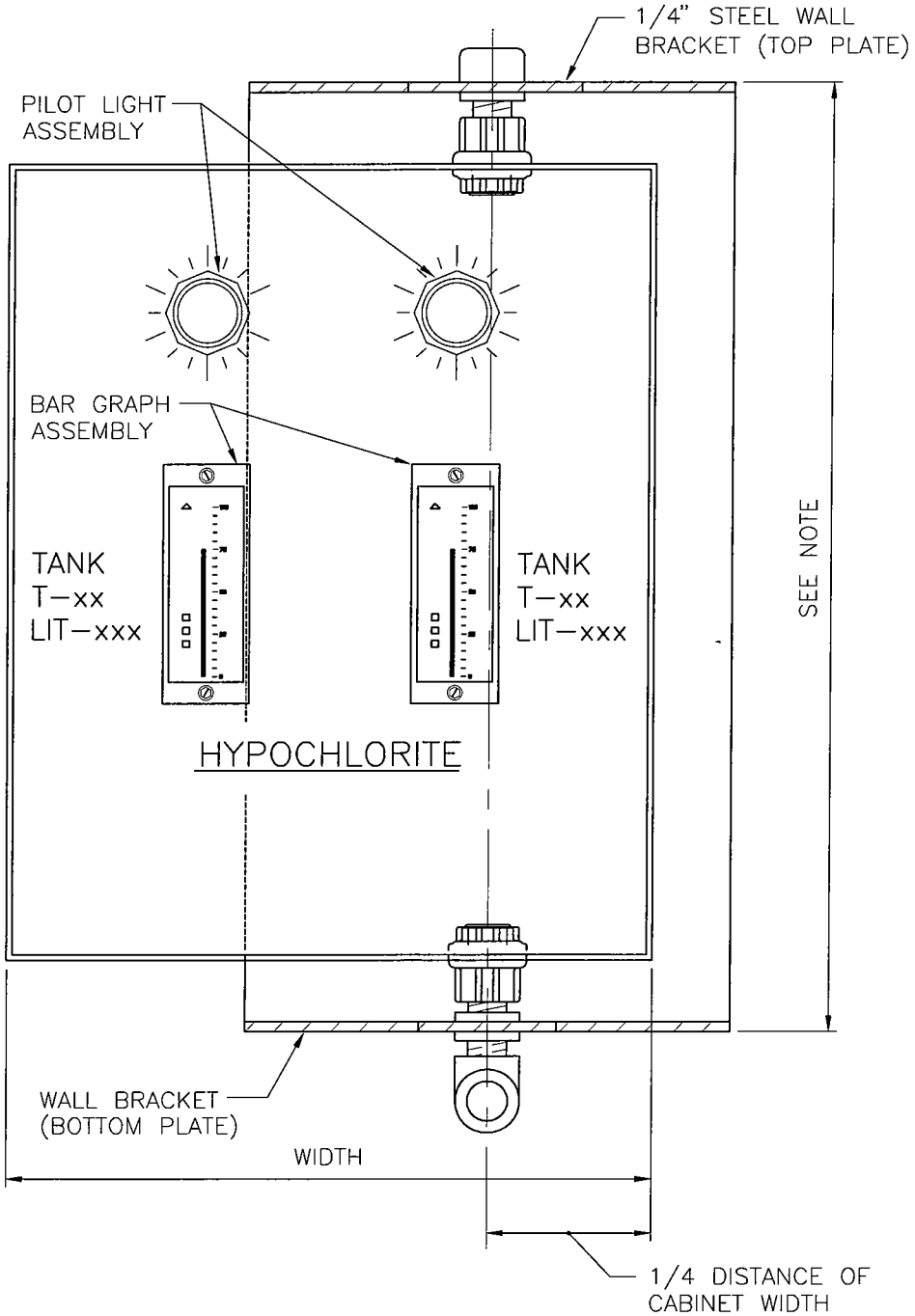

FRONT VIEW

NOTE:

WALL BRACKET HEIGHT SHOULD BE THE HEIGHT OF THE CABINET PLUS ANY DIMENSIONS REQUIRED TO ACCOMODATE SWIVEL ITEMS AS SHOWN ON DETAILS X/XXXX X/XXXX (E11-4A & E11-4B)

HYPOCHLORITE LEVEL DISPLAY PANEL

NOT TO SCALE E11-1 102804

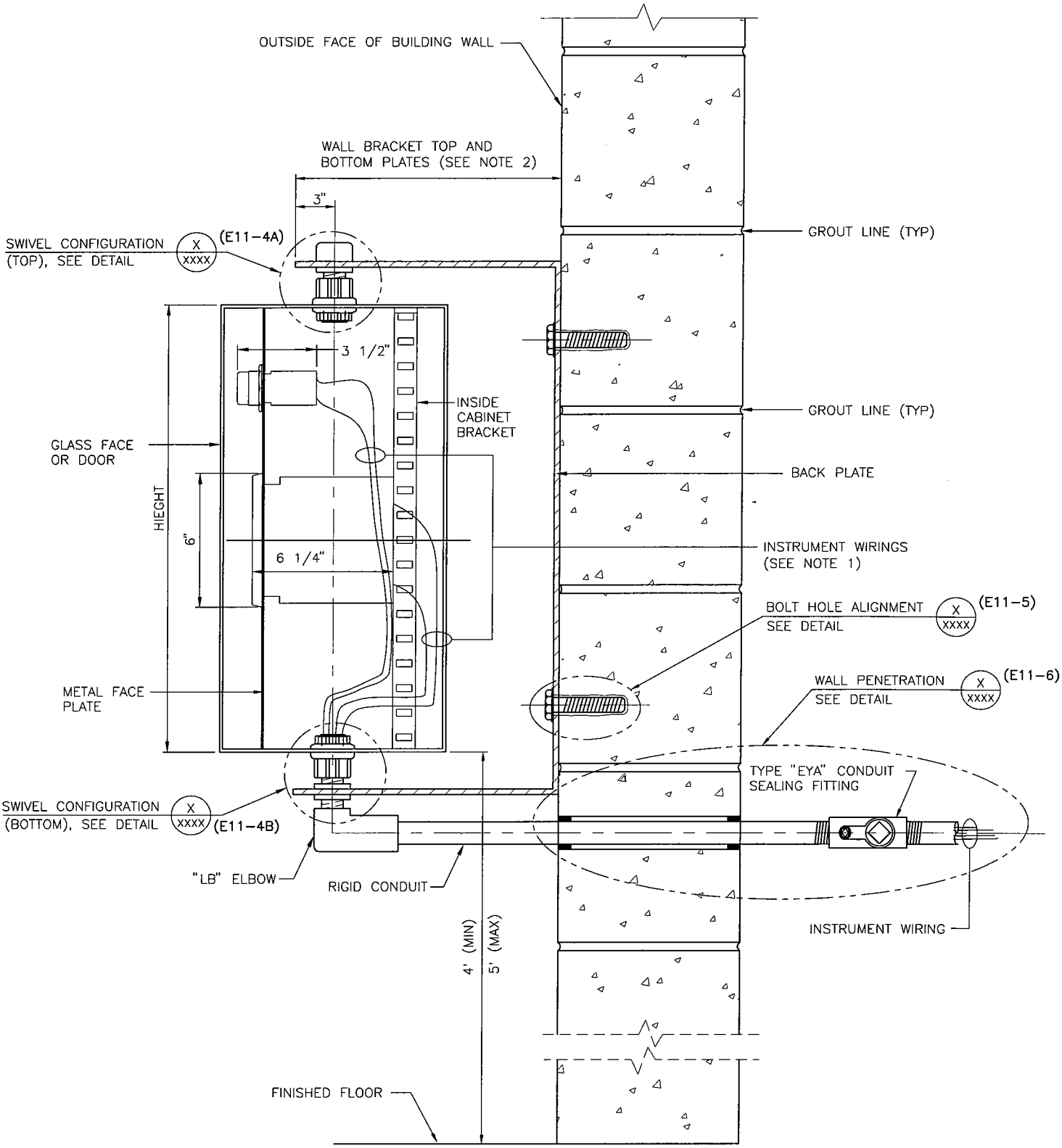

SIDE VIEW

NOTES:

1. LEAVE SUFFICIENT CABLE TO ALLOW SLACK FOR SWIVEL ROTATION.
2. WALL BRACKET HEIGHT SHOULD BE THE HEIGHT OF THE CABINET PLUS ANY DIMENSIONS REQUIRED TO ACCOMODATE SWIVEL ITEMS AS SHOWN ON DETAILS X XXXX X XXXX (E11-4A & E11-4B)

HYPOCHLORITE LEVEL DISPLAY PANEL

NOT TO SCALE E11-2 102804

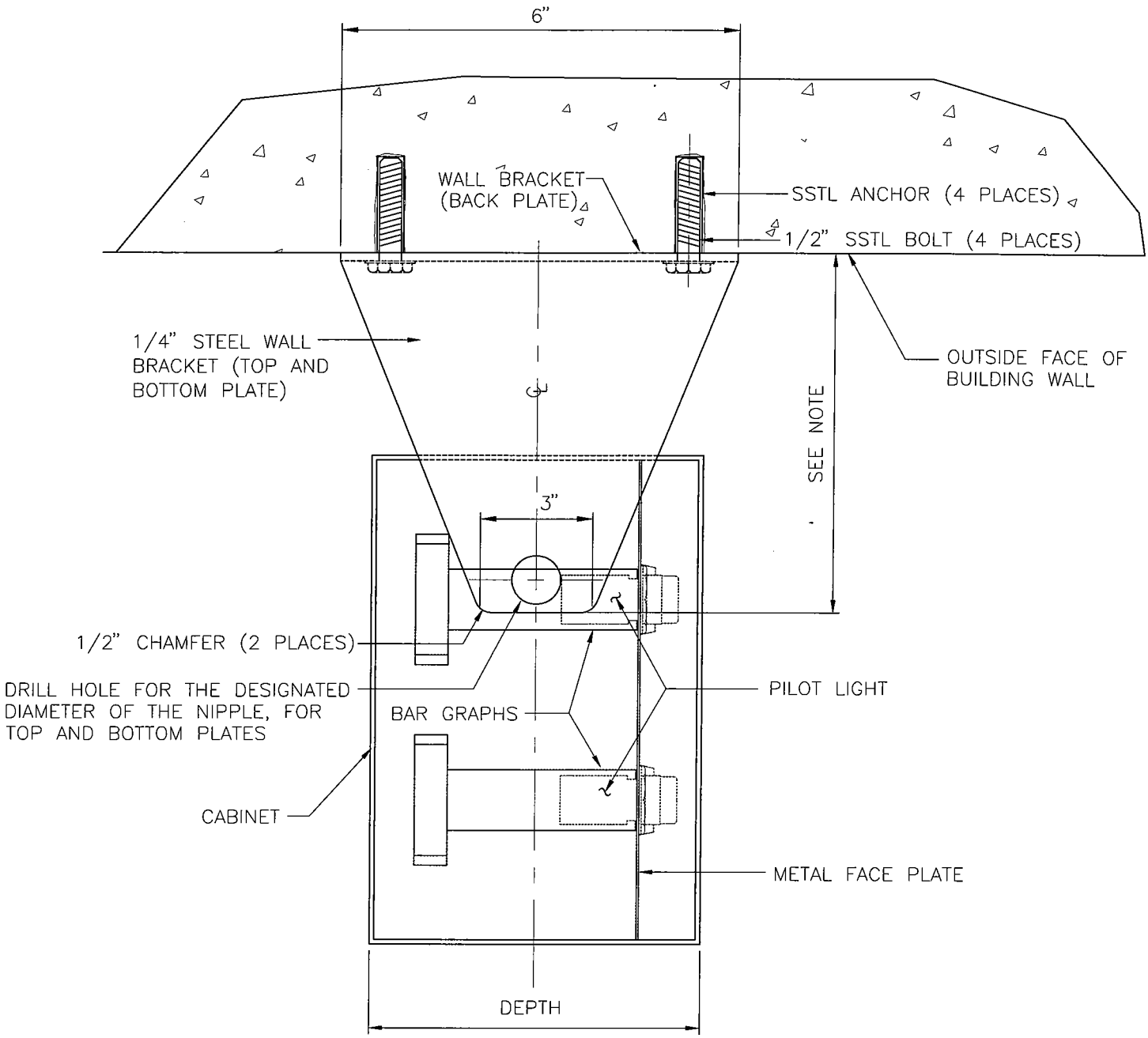

TOP VIEW

NOTE:

WALL BRACKET SHALL BE BUILT OF 1/4" THICK STAINLESS STEEL PLATE. BRACKET PLATES, BOTH TOP AND BOTTOM, SHALL BE SUFFICIENTLY LONG TO ALLOW CABINET TO SWIVEL WITHOUT ANY INTERFERENCES.

HYPOCHLORITE LEVEL DISPLAY PANEL

NOT TO SCALE E11-3 102804

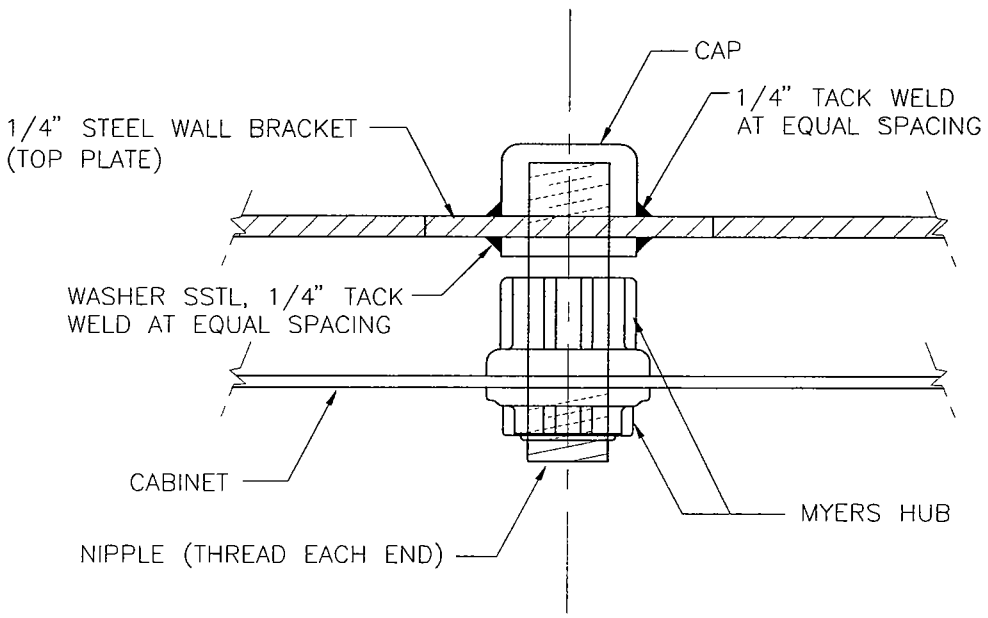

SWIVEL CONFIGURATION - TOP

NOT TO SCALE E11-4A 102804

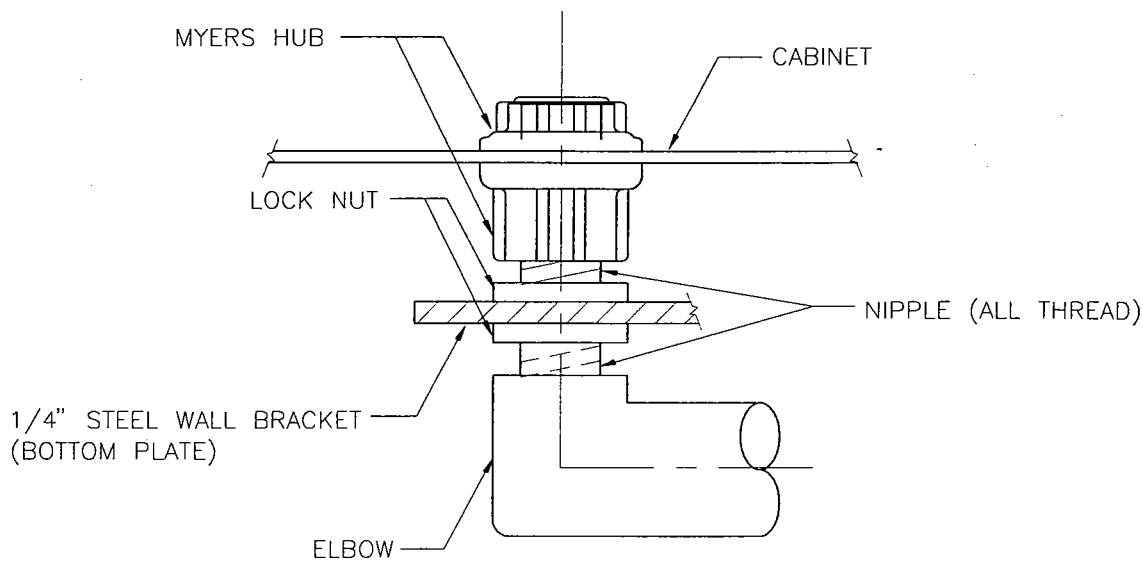

SWIVEL CONFIGURATION - BOTTOM

NOT TO SCALE

E11-4B 102804

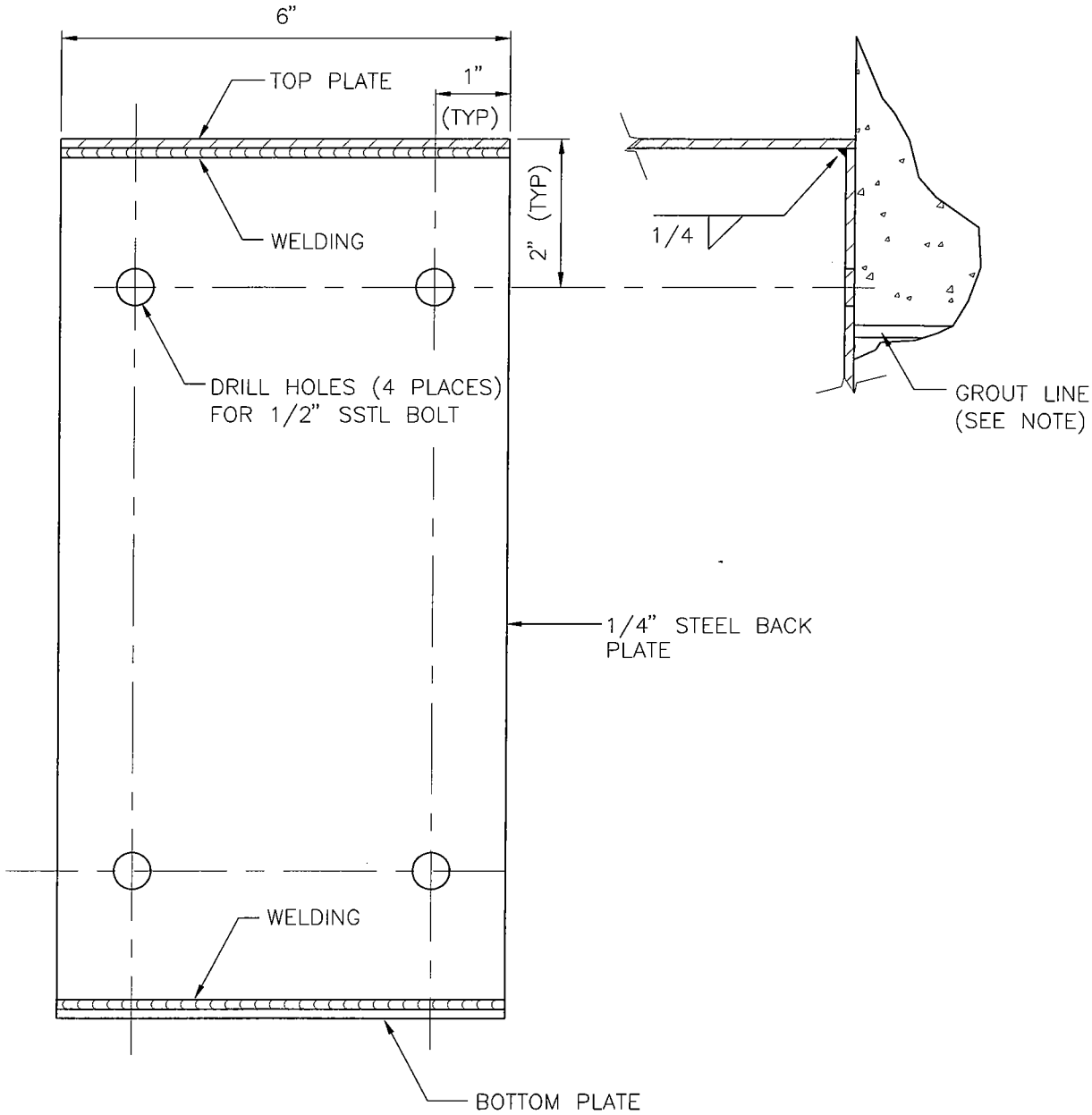

NOTE:
BOLT AND HOLE SHALL BE INSTALLED AWAY FROM THE GROUT LINE.

BOLT HOLE ALIGMENT
WALL BRACKET (BACK PLATE)

NOT TO SCALE E11-5 102804

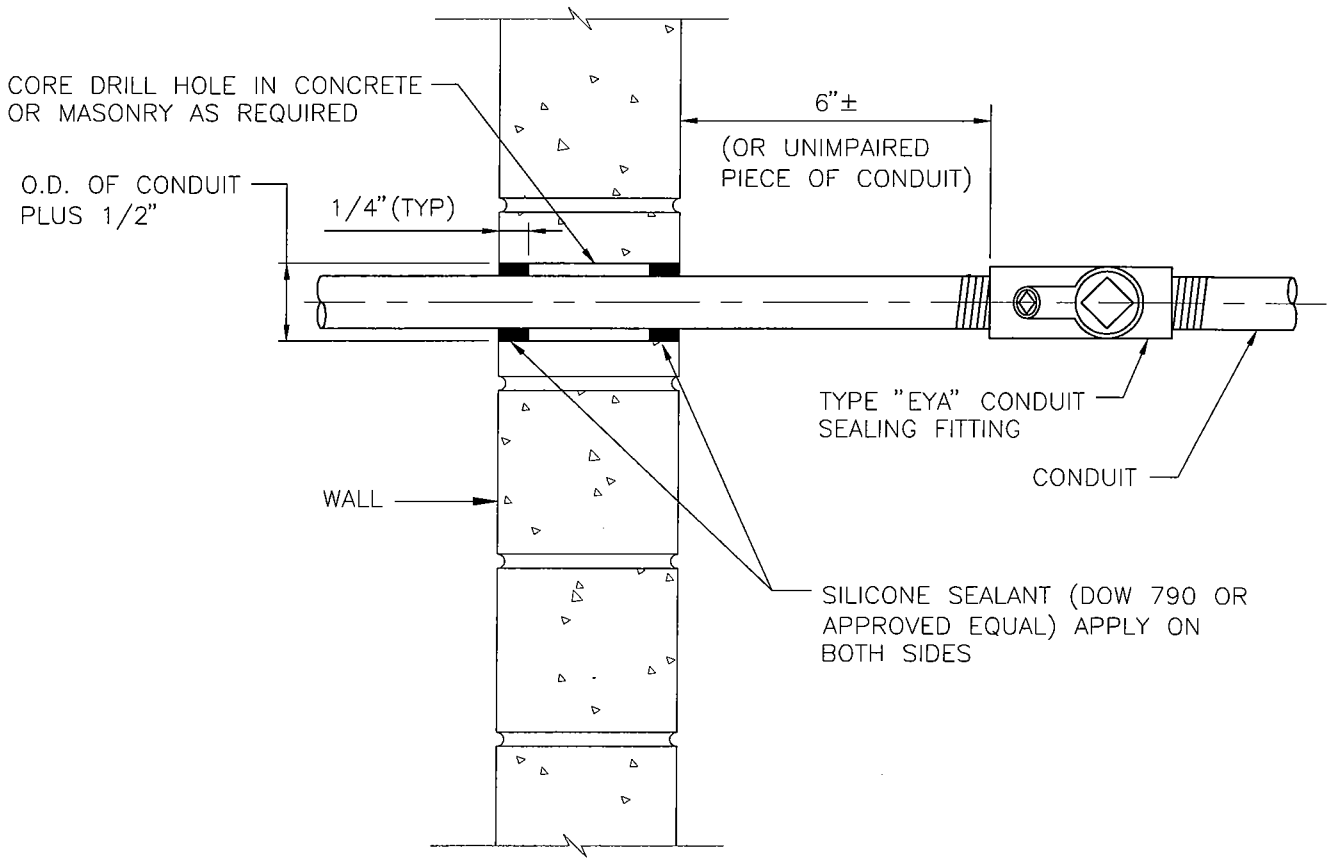

INSTALLATION OF CONDUIT SEALING FITTING

NOT TO SCALE

E11-6 102804

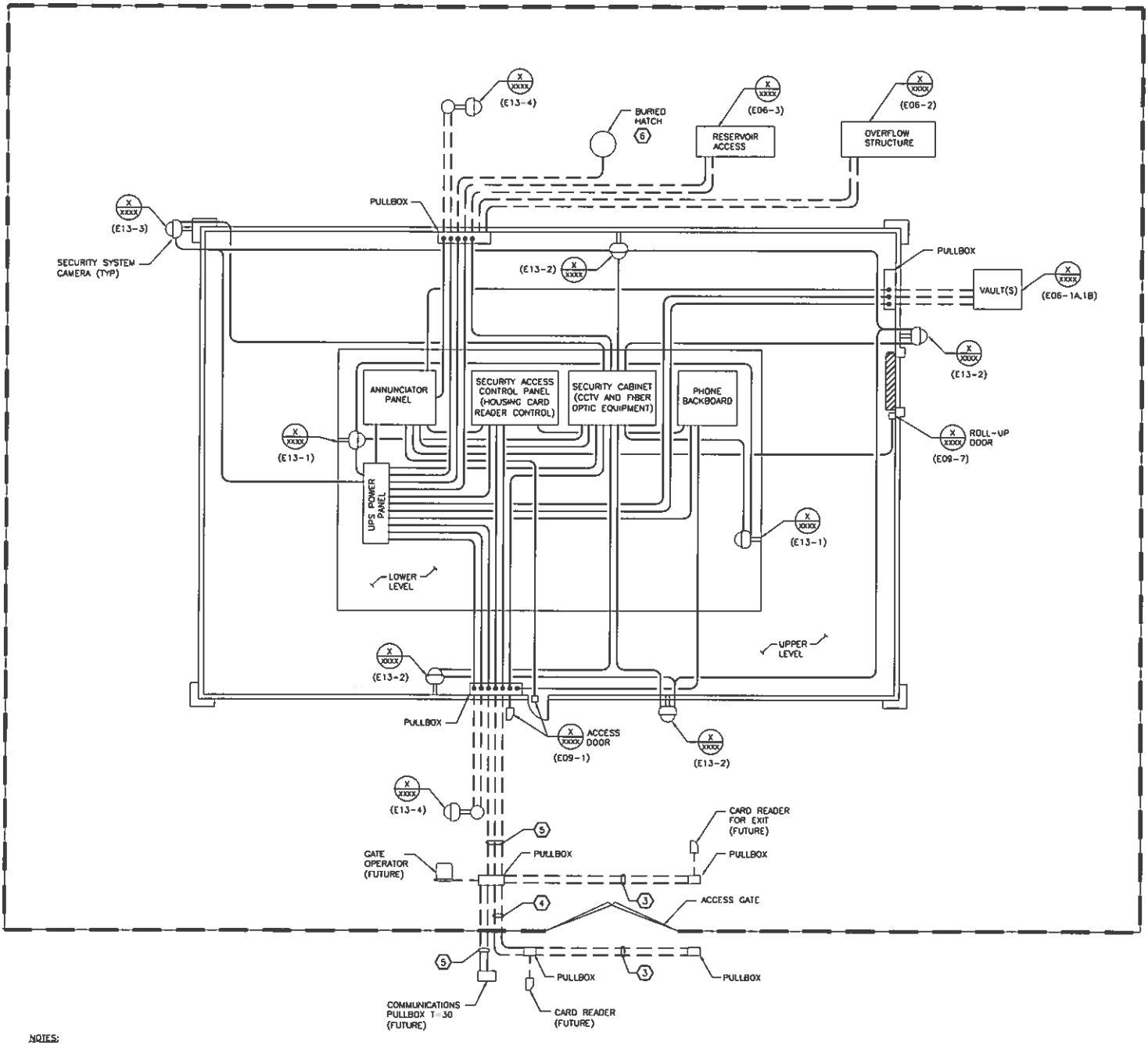

NOTES:

1. ALL CONDUIT ARE 3/4" UNLESS OTHERWISE NOTED.
2. ALL UNDERGROUND CONDUIT ARE 1" UNLESS OTHERWISE NOTED.
3. 2-2" COND. UNDER ENTRY DRIVEWAY-STUB-UP INTO PULLBOXES EITHER SIDE OF DRIVEWAY.
4. 2-2" COND. FOR SECURITY ACCESS.
5. 3-2" COND. FOR FIBER OPTIC, SECURITY, PHONE, AND GATE OPERATOR.
6. ALL BURIED HATCHES, MIXER HATCHES OR OTHER WATER ACCESS POINTS.

PUMP STATION BUILDING, TYPICAL SECURITY SYSTEM LAYOUT

NOT TO SCALE E12-1 102807

FOR REFERENCE ONLY

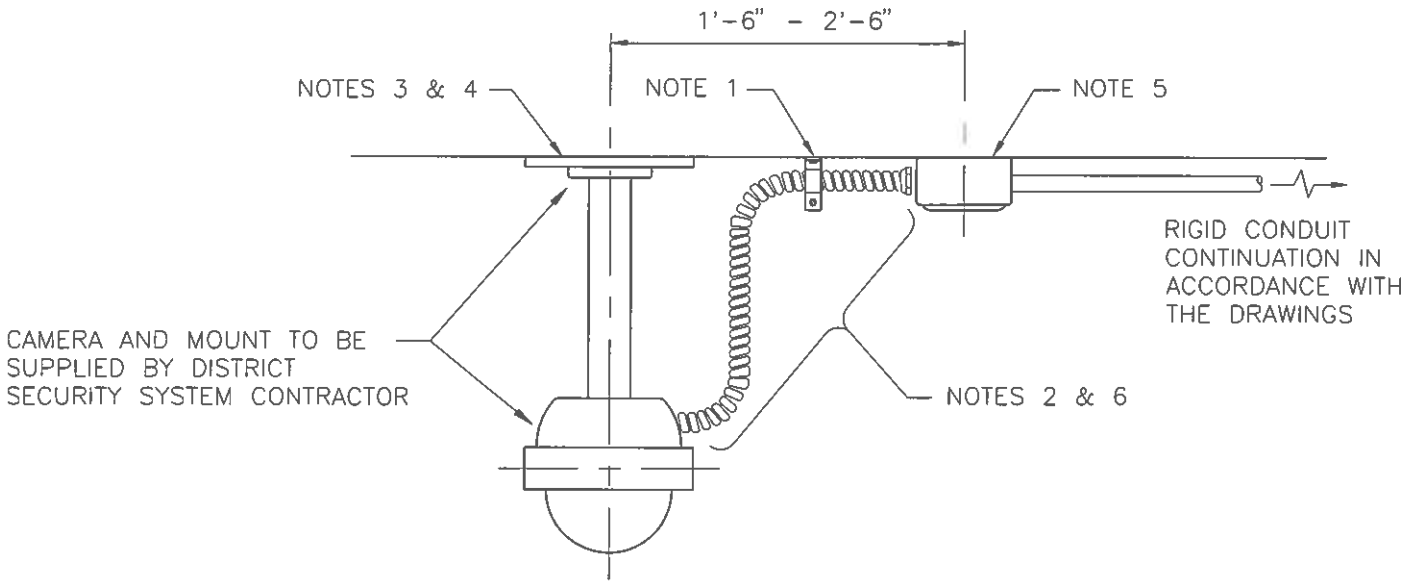

NOTES:

1. SECURE AND SUPPORT LIQUIDTIGHT FLEX CONDUIT WITHIN 1' OF DEVICE BOX AND IN ACCORDANCE WITH NEC ARTICLE 350.
2. IF DISTRICTS SECURITY SYSTEM CONTRACTOR INSTALLS THE CAMERA MOUNT A GREATER DISTANCE THEN ALLOWED FOR LIQUIDTIGHT CONNECTIONS, THE SECURITY CONTRACTOR SHALL RELOCATE THE DEVICE BOX AND REPIPE THE RIGID CONDUIT.
3. CAMERA LOCATION IN ACCORDANCE WITH THE DRAWINGS.
4. ANCHORING THE CAMERA MOUNT BY THE DISTRICTS SECURITY SYSTEM CONTRACTOR:
   a). EXPANSION ANCHORS FOR MASONRY, CONCRETE OR GYPSUM.
   b). DRILL AND/OR TAP FOR STEEL OR SHEET METAL MOUNT.
   c). SEAL ALL ANCHORS AS A APPROPRIATE FOR INSTALLATION.
   d). ALL CAMERA MOUNT METHODS AS APPROVED BY THE ENGINEER.
5. 6"x6"x4" DEVICE BOX.
6. DISTRICT SECURITY SYSTEM CONTRACTOR TO INSTALL AND TERMINATE MAXIMUM OF 4'-6" OF LIQUIDTIGHT FLEX CONDUIT IN ACCORDANCE WITH NEC ARTICLE 350.
7. DISTRICT SECURITY SYSTEM CONTRACTOR TO PROVIDE ALL CABLING.

SECURITY SYSTEM INTERIOR CEILING MOUNT CAMERA

NOT TO SCALE E13-1 102907

FOR REFERENCE ONLY

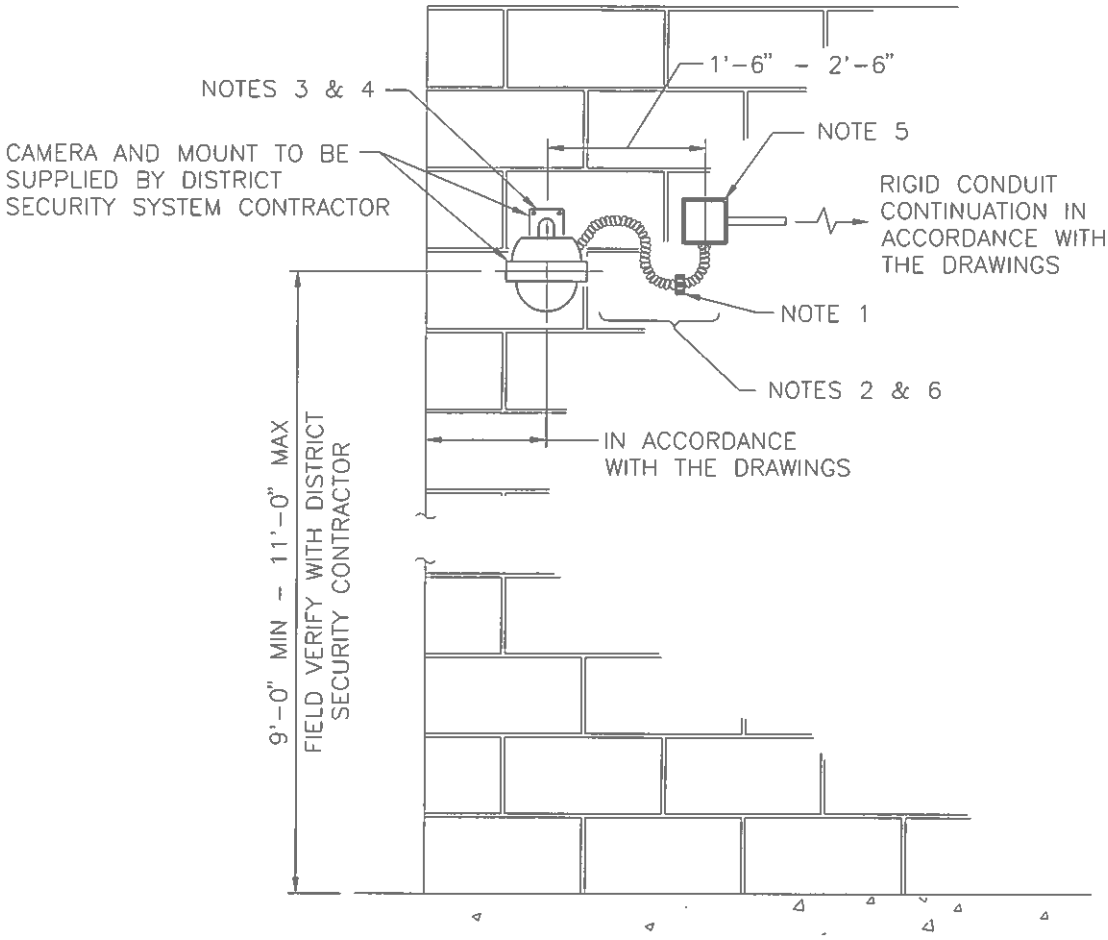

NOTES:

1. SECURE AND SUPPORT LIQUIDTIGHT FLEX CONDUIT WITHIN 1' OF DEVICE BOX AND IN ACCORDANCE WITH NEC ARTICLE 350.
2. IF DISTRICTS SECURITY SYSTEM CONTRACTOR INSTALLS THE CAMERA MOUNT A GREATER DISTANCE THEN ALLOWED FOR LIQUIDTIGHT CONNECTIONS, THE SECURITY CONTRACTOR SHALL RELOCATE THE DEVICE BOX AND REPIPE THE RIGID CONDUIT.
3. CAMERA LOCATION IN ACCORDANCE WITH THE DRAWINGS.
4. ANCHORING THE CAMERA MOUNT BY THE DISTRICTS SECURITY SYSTEM CONTRACTOR:
   a). EXPANSION ANCHORS FOR MASONRY, CONCRETE OR GYPSUM.
   b). DRILL AND/OR TAP FOR STEEL OR SHEET METAL MOUNT.
   c). SEAL ALL ANCHORS AS A APPROPRIATE FOR INSTALLATION.
   d). ALL CAMERA MOUNT METHODS AS APPROVED BY THE ENGINEER.
5. 6"x6"x4" DEVICE BOX, WEATHERPROOF AS REQUIRED.
6. DISTRICT SECURITY SYSTEM CONTRACTOR TO INSTALL AND TERMINATE MAXIMUM OF 4'-6" OF LIQUIDTIGHT FLEX CONDUIT IN ACCORDANCE WITH NEC ARTICLE 350.
7. DISTRICT SECURITY SYSTEM CONTRACTOR TO PROVIDE ALL CABLING.

SECURITY SYSTEM INTERIOR AND EXTERIOR WALL MOUNT CAMERA

NOT TO SCALE E13-2 102907

FOR REFERENCE ONLY

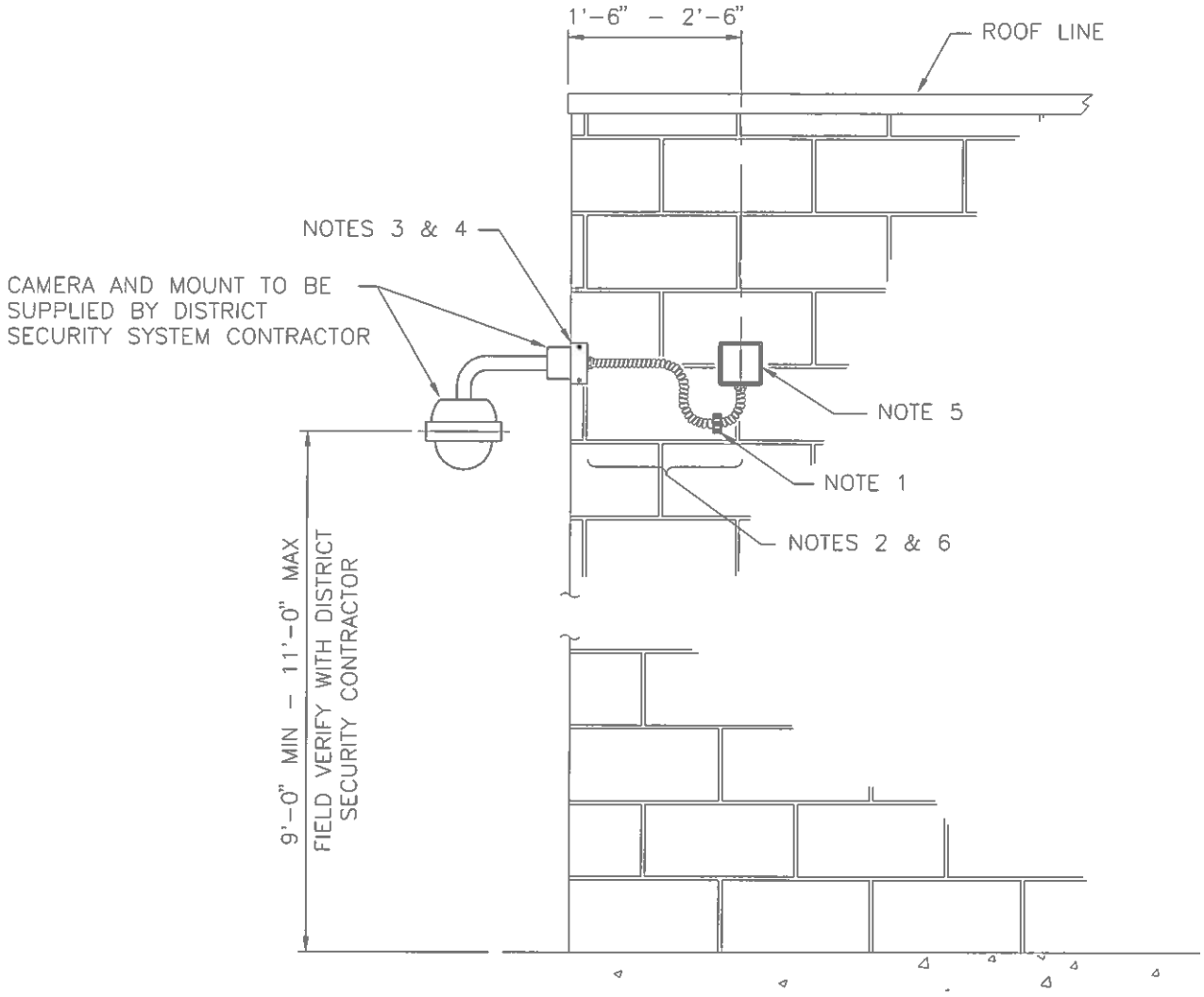

NOTES:

1. SECURE AND SUPPORT LIQUIDTIGHT FLEX CONDUIT WITHIN 1' OF DEVICE BOX AND IN ACCORDANCE WITH NEC ARTICLE 350.
2. IF DISTRICTS SECURITY SYSTEM CONTRACTOR INSTALLS THE CAMERA MOUNT A GREATER DISTANCE THEN ALLOWED FOR LIQUIDTIGHT CONNECTIONS, THE SECURITY CONTRACTOR SHALL RELOCATE THE DEVICE BOX AND REPIPE THE RIGID CONDUIT.
3. CAMERA LOCATION IN ACCORDANCE WITH THE DRAWINGS.
4. ANCHORING THE CAMERA MOUNT BY THE DISTRICTS SECURITY SYSTEM CONTRACTOR:
   a). EXPANSION ANCHORS FOR MASONRY, CONCRETE OR GYPSUM.
   b). DRILL AND/OR TAP FOR STEEL OR SHEET METAL MOUNT.
   c). SEAL ALL ANCHORS AS A APPROPRIATE FOR INSTALLATION.
   d). ALL CAMERA MOUNT METHODS AS APPROVED BY THE ENGINEER.
5. 6"x6"x4" DEVICE BOX, WEATHERPROOF.
6. DISTRICT SECURITY SYSTEM CONTRACTOR TO INSTALL AND TERMINATE MAXIMUM OF 4'-6" OF LIQUIDTIGHT FLEX CONDUIT IN ACCORDANCE WITH NEC ARTICLE 350.
7. DISTRICT SECURITY SYSTEM CONTRACTOR TO PROVIDE ALL CABLING.

SECURITY SYSTEM
EXTERIOR CORNER MOUNT CAMERA

NOT TO SCALE E13-3 102907

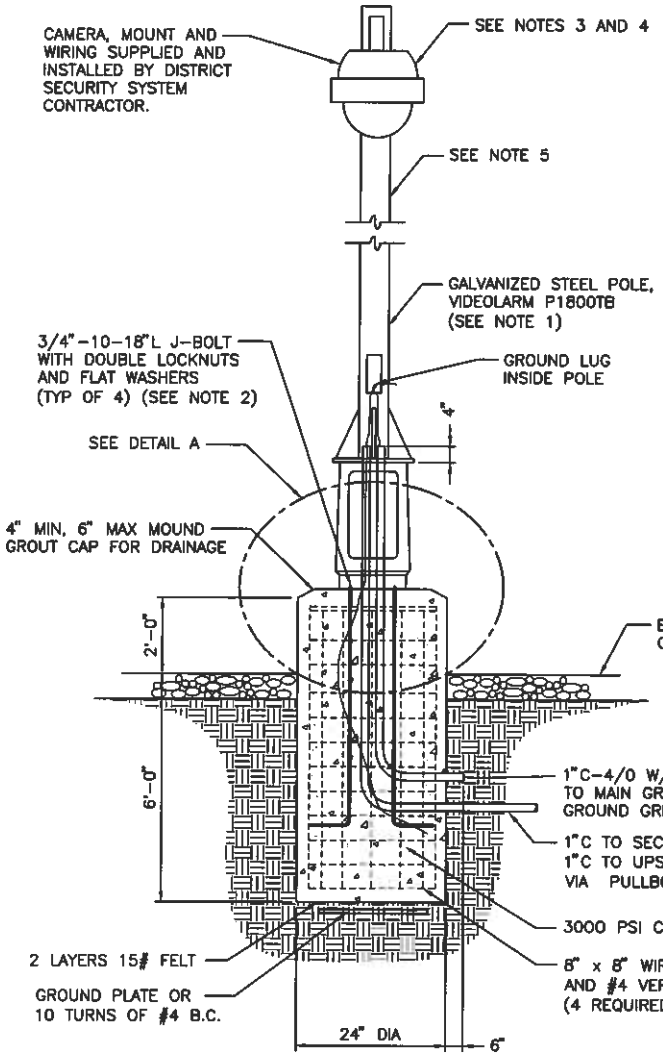

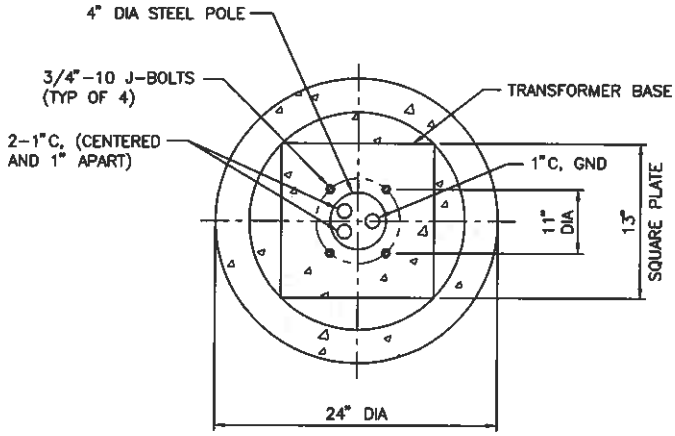

DETAIL A

NOTES:

1. P1800TB INCLUDES 16' POLE AND TRANSFORMER BASE, BUT WITHOUT THE TRANSFORMER.
2. VIDEOLARM POLE ANCHOR JIG PV4 CAN BE USED IN PLACE OF THE J-BOLTS.
3. FIELD COORDINATE HEIGHT WITH SECURITY SYSTEM CONTRACTOR.
4. ALL CABLE TO RUN TO CAMERA LOCATION WITHOUT SPLICE.
5. POLE NOT SUPPLIED BY SECURITY SYSTEM CONTRACTOR.

CAMERA POLE BASE

NOT TO SCALE E13-4 083109

FOR REFERENCE ONLY

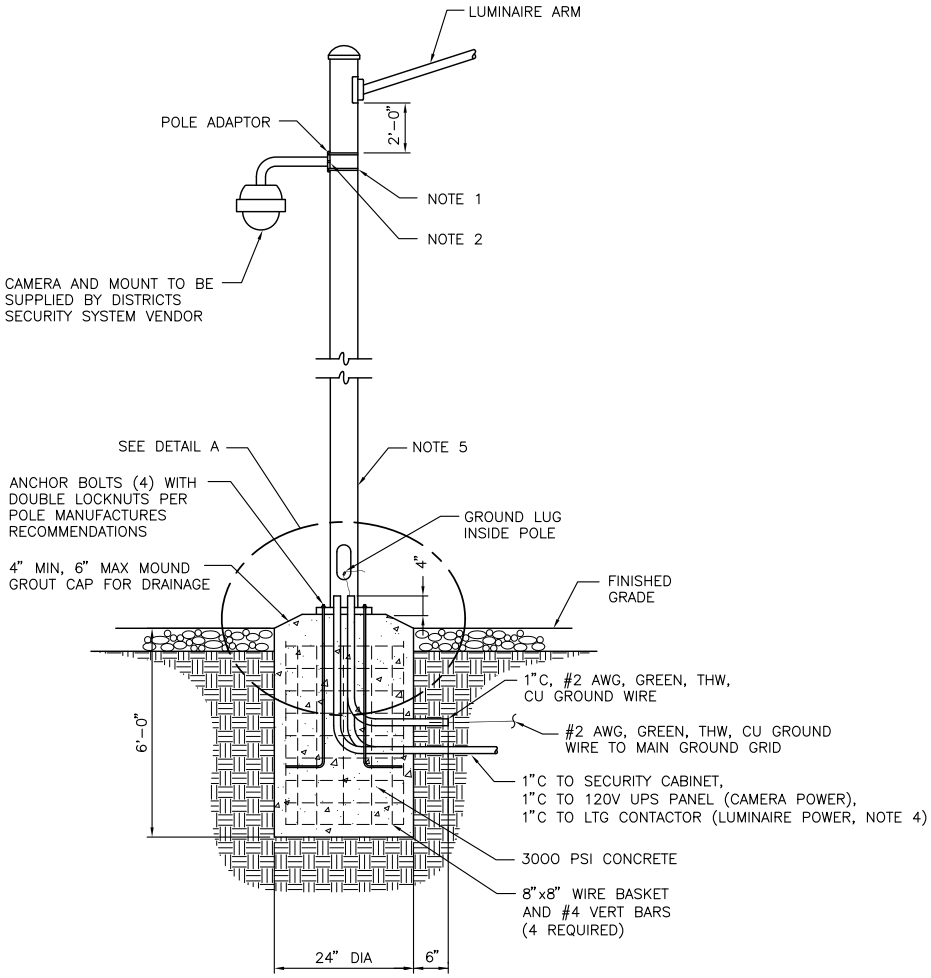

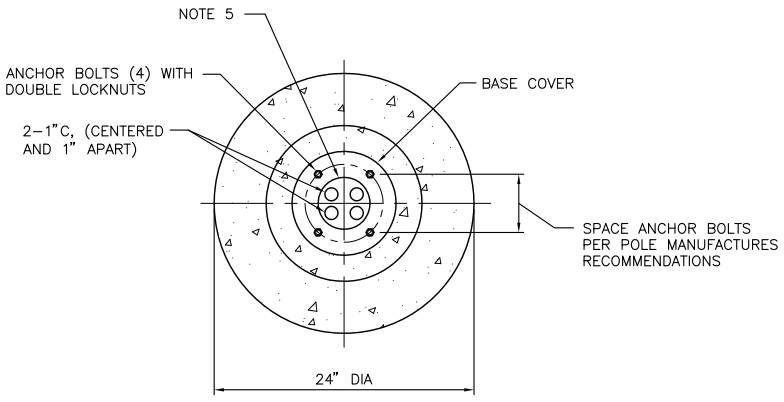

DETAIL A

NOTES:

1. 1" STAINLESS STEEL BANDS AND BINDER SEAL. INSTALL BANDS 13' ABOVE FINISHED GRADE SO CAMERA IS A MIN OF 12' ABOVE FINISHED GRADE.
2. DRILL AND DEBURR 2-1" HOLES IN POLE FOR POWER AND COMMUNICATION, INSTALL RUBBER GROMMET AND SEAL HOLES.
3. THE DISTRICTS SECURITY SYSTEM VENDOR TO PROVIDE ALL CABLING FOR SECURITY COMPONENTS.
4. LUMINAIRE POWER CABLES SHALL BE SHEILDED INSIDE THE POLE TO PREVENT EMI INTERFERENCE WITH SECURITY SYSTEM CABLES.
5. NOTE TO ENGINEER: POLE HEIGHT AND POLE SHAPE/COLOR PER SPECIFIC CONTRACT REQUIREMENTS.

LTG POLE AND CCTV CAMERA

NOT TO SCALE E13-5 062310

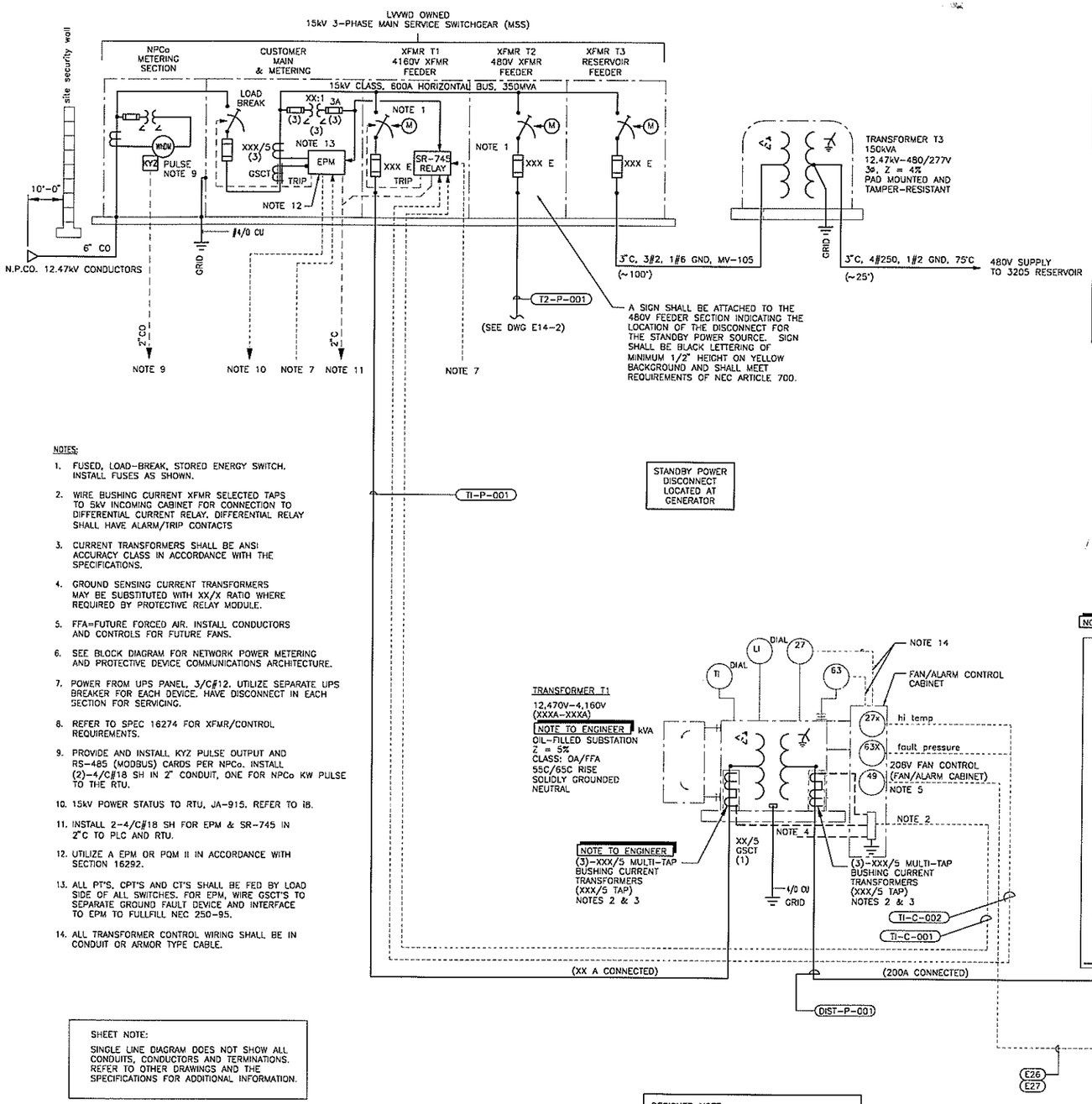

INCOMING 12.47 kVOLT SERVICE, METERING, SECTION	MAIN DISCONNECT SECTION	XXXX ZONE PUMP STATION 4160 VOLT TRANSFORMER T1 FEEDER (DWG E_)	XXXX ZONE PUMP STATION 480 VOLT TRANSFORMER T2 FEEDER (DWG E_)	XXXX ZONE RESERVOIR 480 VOLT TRANSFORMER T3 FEEDER (DWG E_)

15kV - MSS ELEVATION

INCOMING 4160 VOLT SERVICE FROM XFMR T-1 MAIN DISCONNECT SECTION	XXXX ZONE PUMP STATION XXXXMCC-2 FEEDER (DWG E_)	XXXX ZONE PUMP STATION XXXXMCC-2 FEEDER (DWG E_)

5kV - SWITCHGEAR ELEVATION

NOTES:

1. FUSED, LOAD-BREAK, STORED ENERGY SWITCH. INSTALL FUSES AS SHOWN.
2. WIRE BUSHING CURRENT XFMR SELECTED TAPS TO 5kV INCOMING CABINET FOR CONNECTION TO DIFFERENTIAL CURRENT RELAY. DIFFERENTIAL RELAY SHALL HAVE ALARM/TRIP CONTACTS
3. CURRENT TRANSFORMERS SHALL BE ANSI ACCURACY CLASS IN ACCORDANCE WITH THE SPECIFICATIONS.
4. GROUND SENSING CURRENT TRANSFORMERS MAY BE SUBSTITUTED WITH XX/X RATIO WHERE REQUIRED BY PROTECTIVE RELAY MODULE.
5. FFA=FUTURE FORCED AIR. INSTALL CONDUCTORS AND CONTROLS FOR FUTURE FANS.
6. SEE BLOCK DIAGRAM FOR NETWORK POWER METERING AND PROTECTIVE DEVICE COMMUNICATIONS ARCHITECTURE.
7. POWER FROM UPS PANEL, 3/C#12. UTILIZE SEPARATE UPS BREAKER FOR EACH DEVICE. HAVE DISCONNECT IN EACH SECTION FOR SERVICING.
8. REFER TO SPEC 16274 FOR XFMR/CONTROL REQUIREMENTS.
9. PROVIDE AND INSTALL KYZ PULSE OUTPUT AND RS-485 (MODBUS) CARDS PER NPCo. INSTALL (2)-4/C#18 SH IN 2" CONDUIT, ONE FOR NPCo KW PULSE TO THE RTU.
10. 15kV POWER STATUS TO RTU, JA-915. REFER TO 18.
11. INSTALL 2-4/C#18 SH FOR EPM & SR-745 IN 2"C TO PLC AND RTU.
12. UTILIZE A EPM OR PQM II IN ACCORDANCE WITH SECTION 16292.
13. ALL PT'S, CPT'S AND CT'S SHALL BE FED BY LOAD SIDE OF ALL SWITCHES. FOR EPM, WIRE GSCT'S TO SEPARATE GROUND FAULT DEVICE AND INTERFACE TO EPM TO FULLFILL NEC 250-95.
14. ALL TRANSFORMER CONTROL WIRING SHALL BE IN CONDUIT OR ARMOR TYPE CABLE.

SHEET NOTE:

SINGLE LINE DIAGRAM DOES NOT SHOW ALL CONDUITS, CONDUCTORS AND TERMINATIONS. REFER TO OTHER DRAWINGS AND THE SPECIFICATIONS FOR ADDITIONAL INFORMATION.

THE DESIGN PROFESSIONAL HAS PERFORMED ALL REQUIRED VOLTAGE DROP CALCULATIONS AND ALL BRANCH CIRCUITS AND FEEDERS COMPLY WITH NEC 210-19(A) FPN NO. 4.
(CITY OF LAS VEGAS)

THE DESIGN PROFESSIONAL HAS PERFORMED ALL REQUIRED SHORT CIRCUIT CALCULATIONS AND THE AIC RATINGS INDICATED FOR EACH DEVICE IS ADEQUATE TO PROTECT THE EQUIPMENT AND THE ELECTRICAL SYSTEM.

NOTE: IN NEW INSTALLATIONS, THE **INCOMING FAULT AT THE MAIN** IS ALWAYS REQUIRED. (CLV)

DESIGNER NOTE:

WIRE AND CONDUIT SIZES ARE SHOWN FOR REFERENCE ONLY.

ENGINEER TO VERIFY AND UPDATE PARAMETERS PER SPECIFIC PROJECT REQUIREMENTS.

FOR REFERENCE ONLY

SITE-ONE LINE DIAGRAM

NOT TO SCALE E14-1 071806

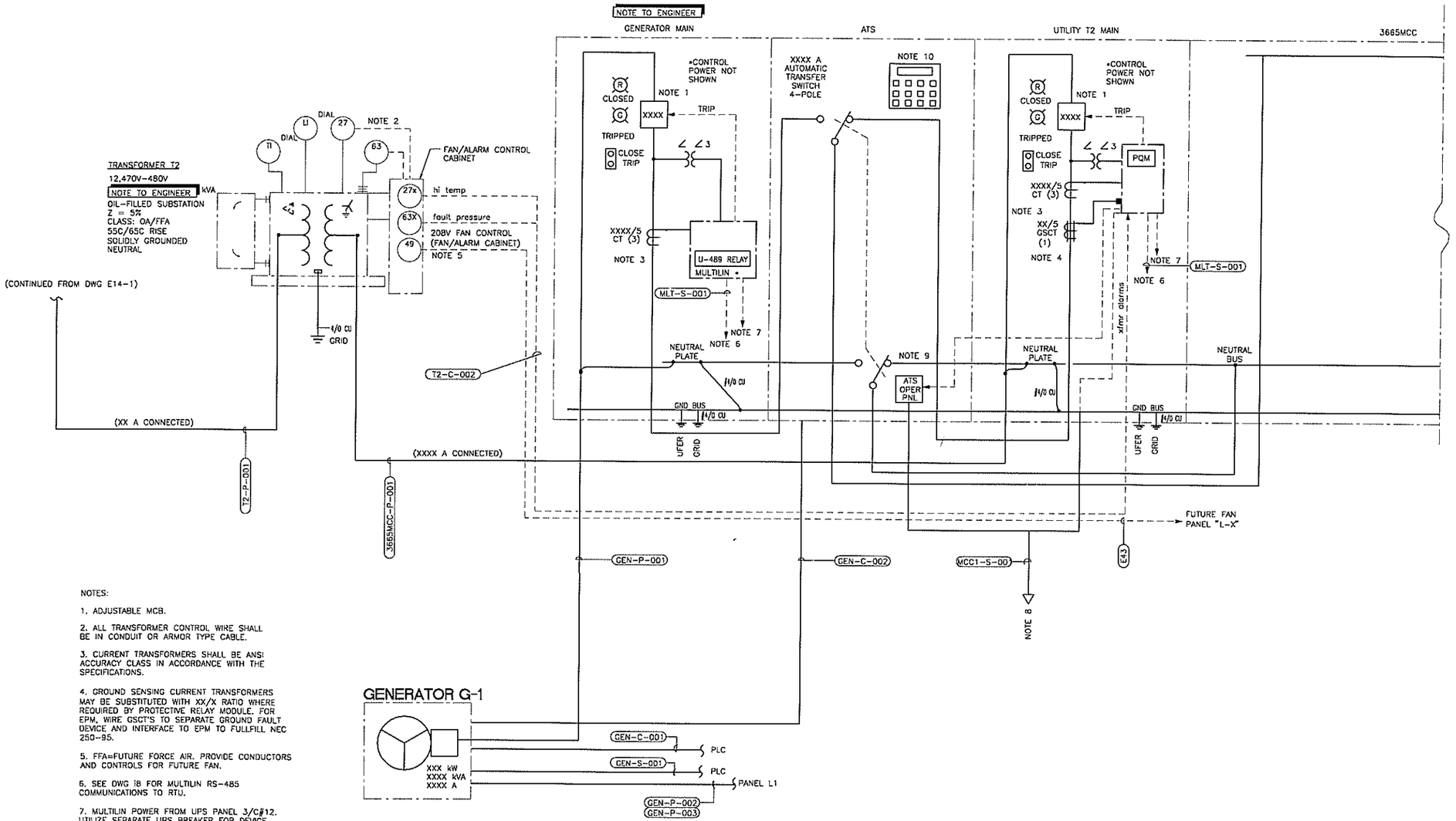

NOTES:

1. ADJUSTABLE MCB.
2. ALL TRANSFORMER CONTROL WIRE SHALL BE IN CONDUIT OR ARMOR TYPE CABLE.
3. CURRENT TRANSFORMERS SHALL BE ANSI ACCURACY CLASS IN ACCORDANCE WITH THE SPECIFICATIONS.
4. GROUND SENSING CURRENT TRANSFORMERS MAY BE SUBSTITUTED WITH XX/X RATIO WHERE REQUIRED BY PROTECTIVE RELAY MODULE. FOR EPM, WIRE GSCT'S TO SEPARATE GROUND FAULT DEVICE AND INTERFACE TO EPM TO FULLFILL NEC 250-95.
5. FFA=FUTURE FORCE AIR. PROVIDE CONDUCTORS AND CONTROLS FOR FUTURE FAN.
6. SEE DWG I8 FOR MULTILIN RS-485 COMMUNICATIONS TO RTU.
7. MULTILIN POWER FROM UPS PANEL 3/C#12. UTILIZE SEPARATE UPS BREAKER FOR DEVICE. HAVE DISCONNECT IN EACH SECTION FOE SEVICING.
8. ATS STATUS ZS-902 480V POWER TROUBLE JA-900 480V POWER FAIL JA-925 REFER TO DWG I8.
9. OVERLAPPING NEUTRAL TRANSITION TIMING SHALL BE COORDINATED WITH GROUND FAULT DEVICE TRIP TIMING.
10. ATS MANUFACTURER SUPPLIED DISPLAY/KEYPAD.

SHEET NOTE:

SINGLE LINE DIAGRAM DOES NOT SHOW ALL CONDUITS, CONDUCTORS AND TERMINATIONS. REFER TO OTHER DRAWINGS AND THE SPECIFICATIONS FOR ADDITIONAL INFORMATION.

DESIGNER NOTE:

WIRE AND CONDUIT SIZES ARE SHOWN FOR REFERENCE ONLY.

ENGINEER TO VERIFY AND UPDATE PARAMETERS PER SPECIFIC PROJECT REQUIREMENTS.

FOR REFERENCE ONLY

SITE-ONE LINE DIAGRAM W/GENERATOR

NOT TO SCALE

TYPE	AMPS
DESIGN	600
CONNECTED	
DEMAND	

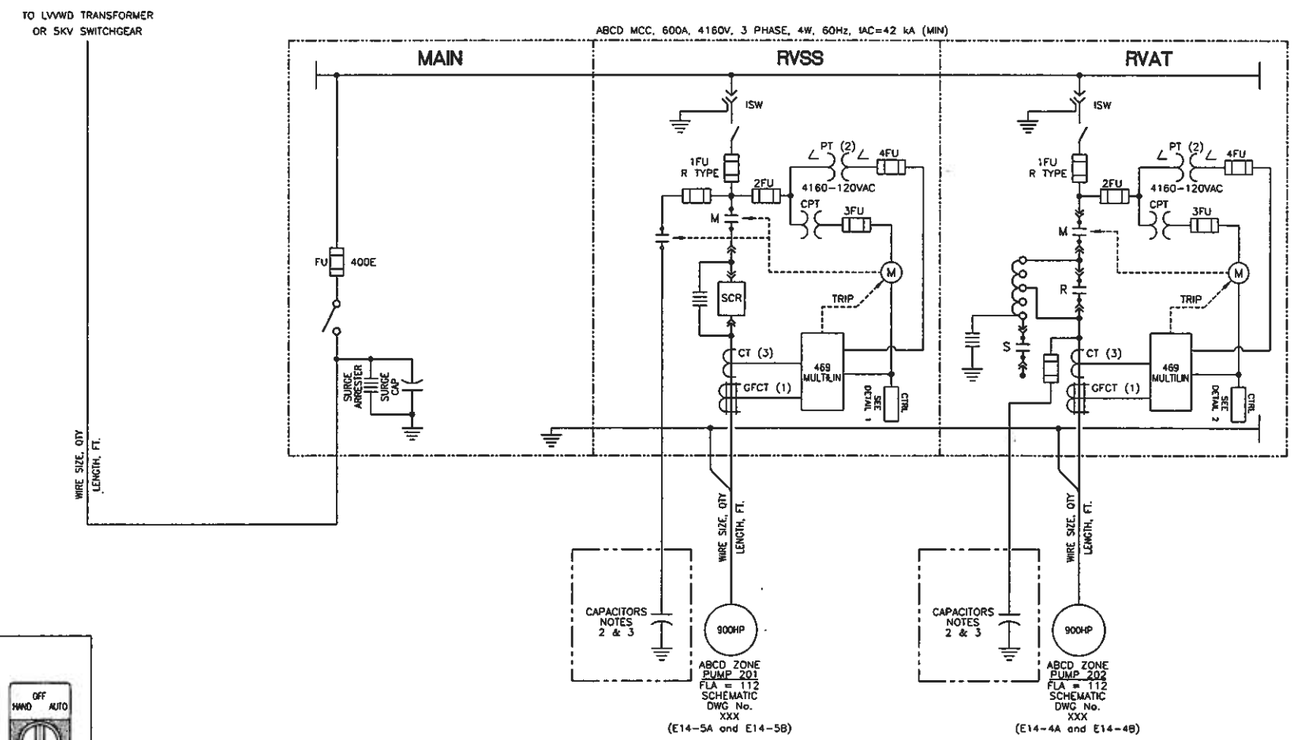

TYPICAL SINGLE LINE DIAGRAM

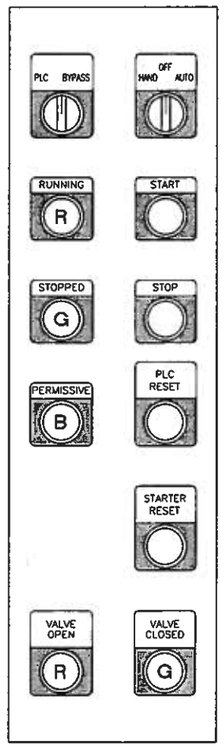

CONTROL DETAIL 1

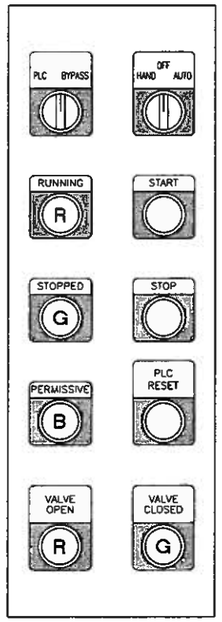

CONTROL DETAIL 2

MAIN INCOMING (BOTTOM ENTRANCE)	ABCD ZONE PUMP 201 METERING SECTION	ABCD ZONE PUMP 202 METERING SECTION	ABCD ZONE PUMP 202 MOTOR STARTER 900 HP
	ABCD ZONE PUMP 201 MOTOR STARTER 900 HP RVSS		ABCD ZONE PUMP 202 MOTOR STARTER AUTOTRANSFORMER RVAT

TYPICAL MCC ELEVATION

NOTES:

1. "ABCD" IN EQUIPMENT NUMBER REFERS TO THE PHYSICAL WATER PUMPING ZONE NUMBER.
2. NOTE TO ENGINEER – SEE SPECIFICATON SECTION 16222 FOR APPLICATION OF MOTOR CAPACITORS.
3. NOTE TO ENGINEER – LOCATE CAPACITORS AS CLOSE TO MCC AS POSSIBLE.
4. ALL PUSHBUTTONS, INDICATING LIGHTS, AND OPERATOR INTERFACE MODULES SHALL BE LOCATED ON THE FRONT OF THE STARTER DOOR.

TYPICAL SINGLE LINE DIAGRAM AND ELEVATION FOR 5kV MOTOR CONTROL CENTER WITH RVAT AND RVSS STARTERS

NOT TO SCALE E14-3 041907

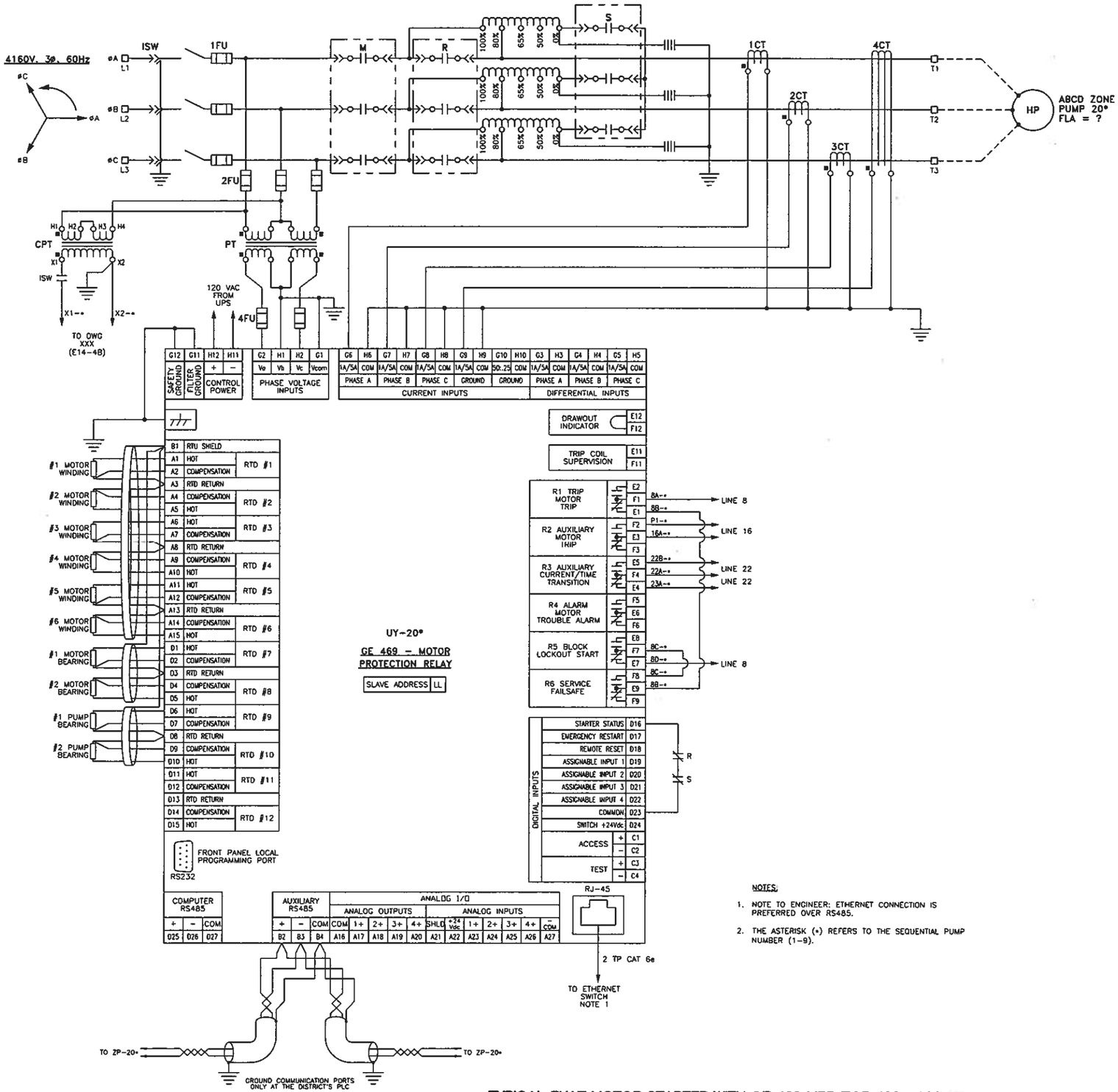

COMMUNICATION PORT CONNECTIONS

NOTES:

1. NOTE TO ENGINEER: ETHERNET CONNECTION IS PREFERRED OVER RS485.
2. THE ASTERISK (*) REFERS TO THE SEQUENTIAL PUMP NUMBER (1-9).

TYPICAL RVAT MOTOR STARTER WITH GE 469 MPR FOR 400 - 900 HP AT 4160 VOLTS, 3 DIA, 60HZ SCHEMATIC DIAGRAM I

NOT TO SCALE

E14-4A 041907

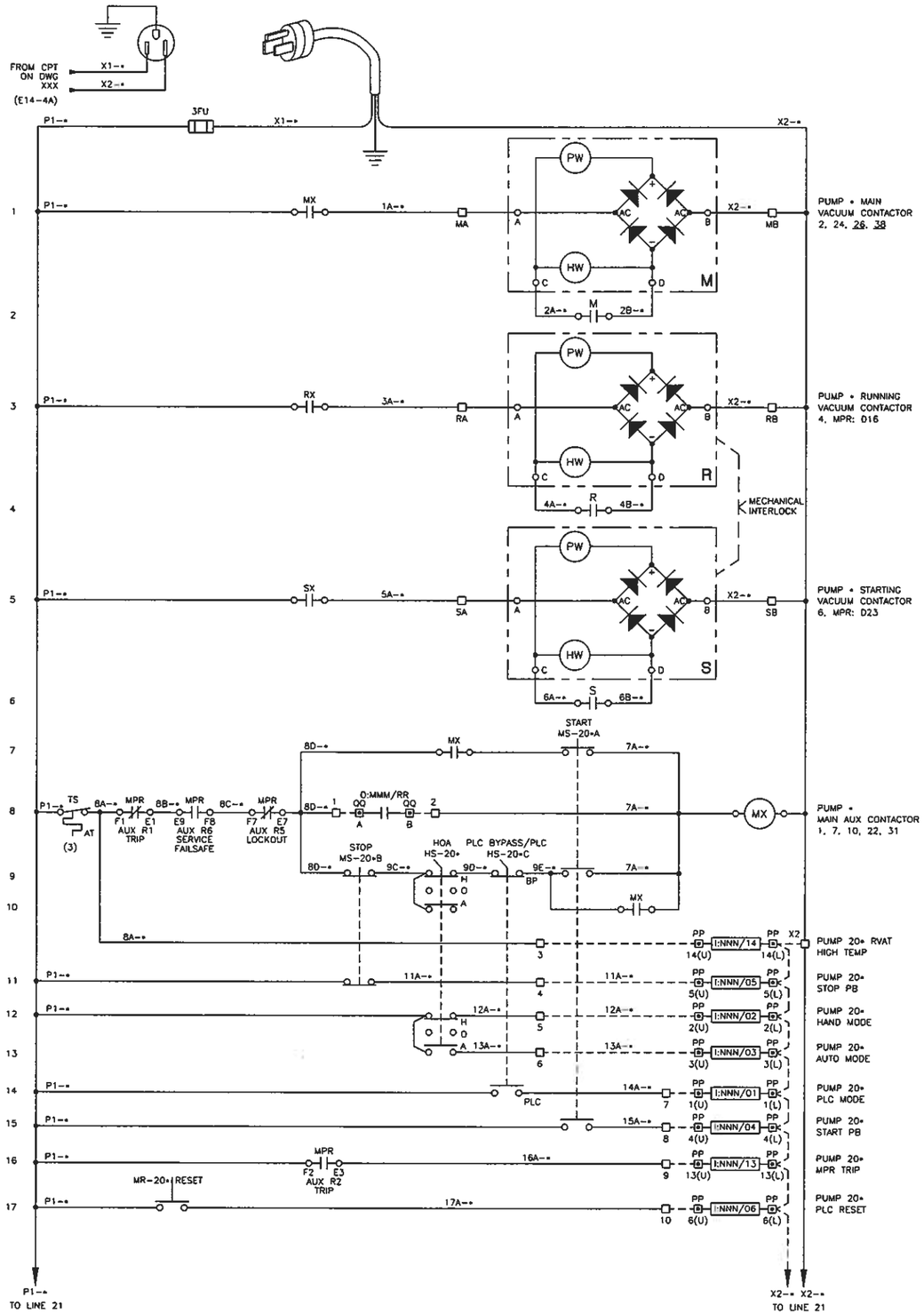

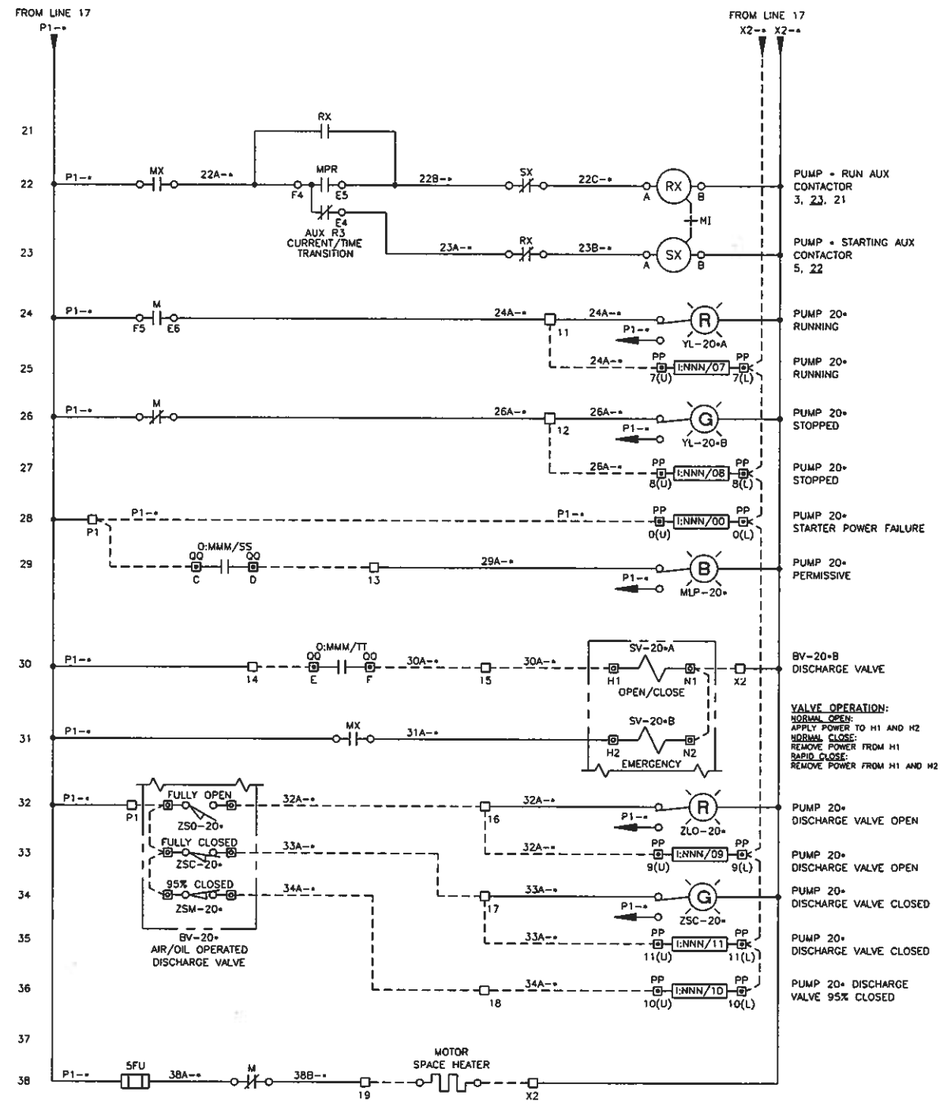

NOTES:

1. THE ASTERISK (*) REFERS TO A SEQUENTIAL NUMBER FOR THE PUMPS IN THE PUMP STATION.
2. THE 95% CLOSED LIMIT SWITCH IS OPEN WHEN THE DISCHARGE VALVE IS 95-100% CLOSED.
3. P&ID REFERENCE DRAWING XXX (IT04-17)
4. PLC REFERENCE DRAWINGS XXX AND XXX (IT06-8, IT06-14)

   (NOTE TO ENGINEER: THIS SCHEMATIC IS FOR ZONE PUMPS ONLY)

		PLC OUTPUT SLOT	PLC INPUT SLOT	INTERFACE TERMINALS		PLC OUTPUT POINT NO.			PLC OUTPUT TERMINALS					
	*	MMM	NNN	PP	QQ	RR	SS	TT	A	B	C	D	E	F
ZP-201	1													
ZP-202	2	107	012	012	107	00	01	02	0(U)	0(L)	1(U)	1(L)	2(U)	2(L)
ZP-203	3													
ZP-204	4													
ZP-205	5													
ZP-206	6													
ZP-207	7													
ZP-208	8													

TYPICAL RVAT MOTOR STARTER WITH GE 469 MPR FOR 400 - 900 HP AT 4160 VOLTS, 3 DIA, 60HZ SCHEMATIC DIAGRAM II

NOT TO SCALE

E14-4B 041907

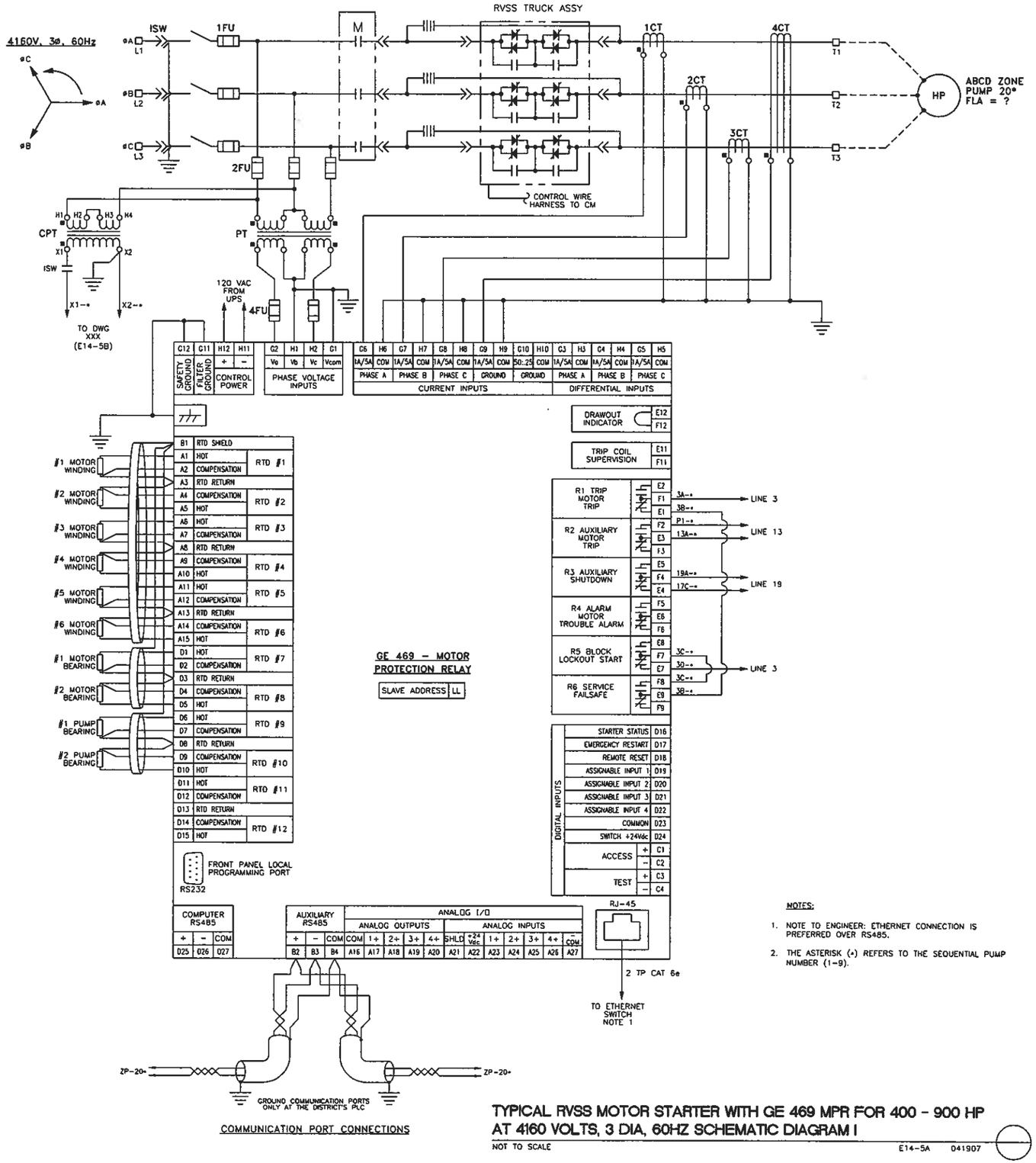

NOTES:

1. NOTE TO ENGINEER: ETHERNET CONNECTION IS PREFERRED OVER RS485.
2. THE ASTERISK (*) REFERS TO THE SEQUENTIAL PUMP NUMBER (1–9).

TYPICAL RVSS MOTOR STARTER WITH GE 469 MPR FOR 400 - 900 HP AT 4160 VOLTS, 3 DIA, 60HZ SCHEMATIC DIAGRAM I

NOT TO SCALE

E14-5A 041907

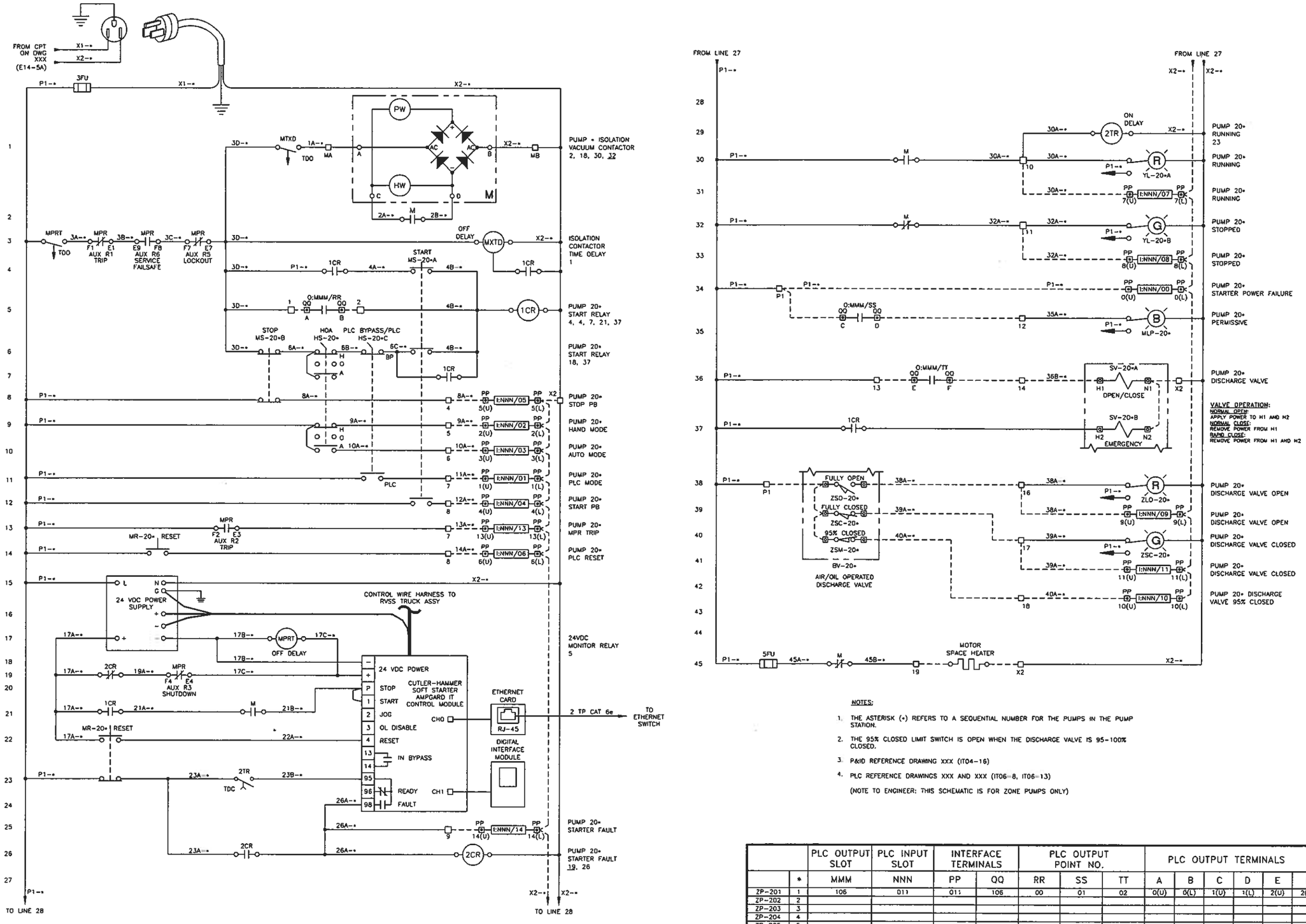

NOTES:

1. THE ASTERISK (*) REFERS TO A SEQUENTIAL NUMBER FOR THE PUMPS IN THE PUMP STATION.
2. THE 95% CLOSED LIMIT SWITCH IS OPEN WHEN THE DISCHARGE VALVE IS 95-100% CLOSED.
3. P&ID REFERENCE DRAWING XXX (IT04-16)
4. PLC REFERENCE DRAWINGS XXX AND XXX (IT06-8, IT06-13)

(NOTE TO ENGINEER: THIS SCHEMATIC IS FOR ZONE PUMPS ONLY)

		PLC OUTPUT SLOT	PLC INPUT SLOT	INTERFACE TERMINALS		PLC OUTPUT POINT NO.			PLC OUTPUT TERMINALS					
	*	MMM	NNN	PP	QQ	RR	SS	TT	A	B	C	D	E	F
ZP-201	1	106	011	011	106	00	01	02	0(U)	0(L)	1(U)	1(L)	2(U)	2(L)
ZP-202	2													
ZP-203	3													
ZP-204	4													
ZP-205	5													
ZP-206	6													
ZP-207	7													
ZP-208	8													

TYPICAL RVSS MOTOR STARTER WITH GE 469 MPR FOR 400 - 900 HP AT 4160 VOLTS, 3 DIA, 60HZ SCHEMATIC DIAGRAM II

NOT TO SCALE

E14-58 041907

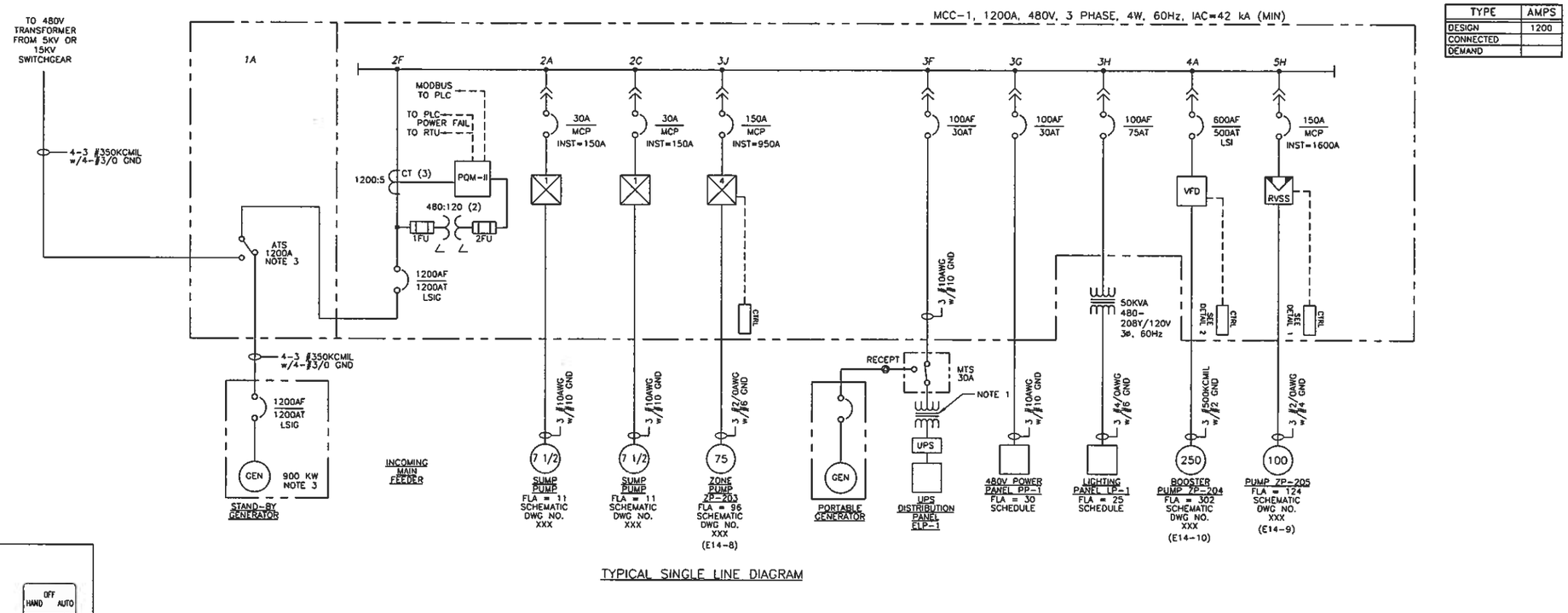

TYPE	AMPS
DESIGN	1200
CONNECTED	
DEMAND	

TYPICAL SINGLE LINE DIAGRAM

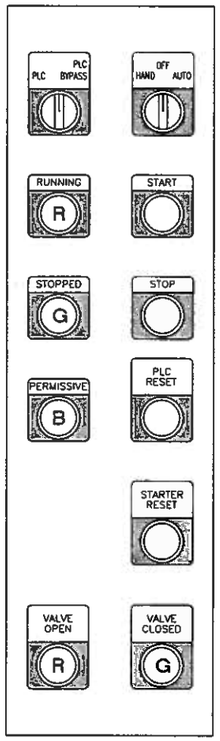

CONTROL DETAIL 1

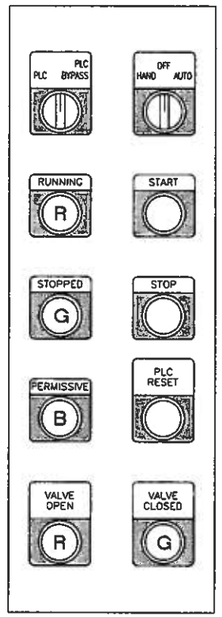

CONTROL DETAIL 2

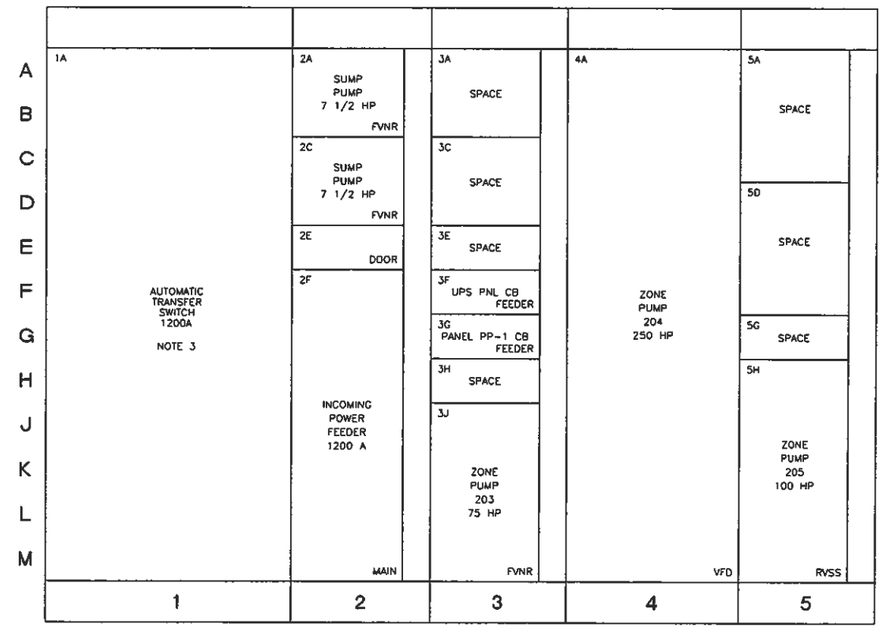

TYPICAL MCC ELEVATION

NOTES

1. NOTE TO ENGINEER: MINIMUM SIZE OF UPS TRANSFORMER IS 10KVA PER SPECIFICATIONS.
2. NOTE TO ENGINEER: SHOW FRAME SIZE ON FEEDERS AND MAINS.
3. NOTE TO ENGINEER: THE INCOMING LINE GENERATOR AND TRANSFER SWITCH SHALL BE PROVIDED ON CLOSED ZONE SYSTEMS ONLY. THE GENERATOR AND TRANSFER SWITCH RATINGS SHALL BE ADEQUATE TO OPERATE THE ENTIRE PUMP STATION FOR THE DURATION OF ANY OUTAGE.
4. ALL PUSHBUTTONS, INDICATING LIGHTS, AND OPERATOR INTERFACE MODULES SHALL BE LOCATED ON THE FRONT OF THE STARTER DOOR.

TYPICAL SINGLE LINE DIAGRAM AND ELEVATION FOR 480 VOLT SWITCHGEAR AND MOTOR CONTROL CENTER

NOT TO SCALE

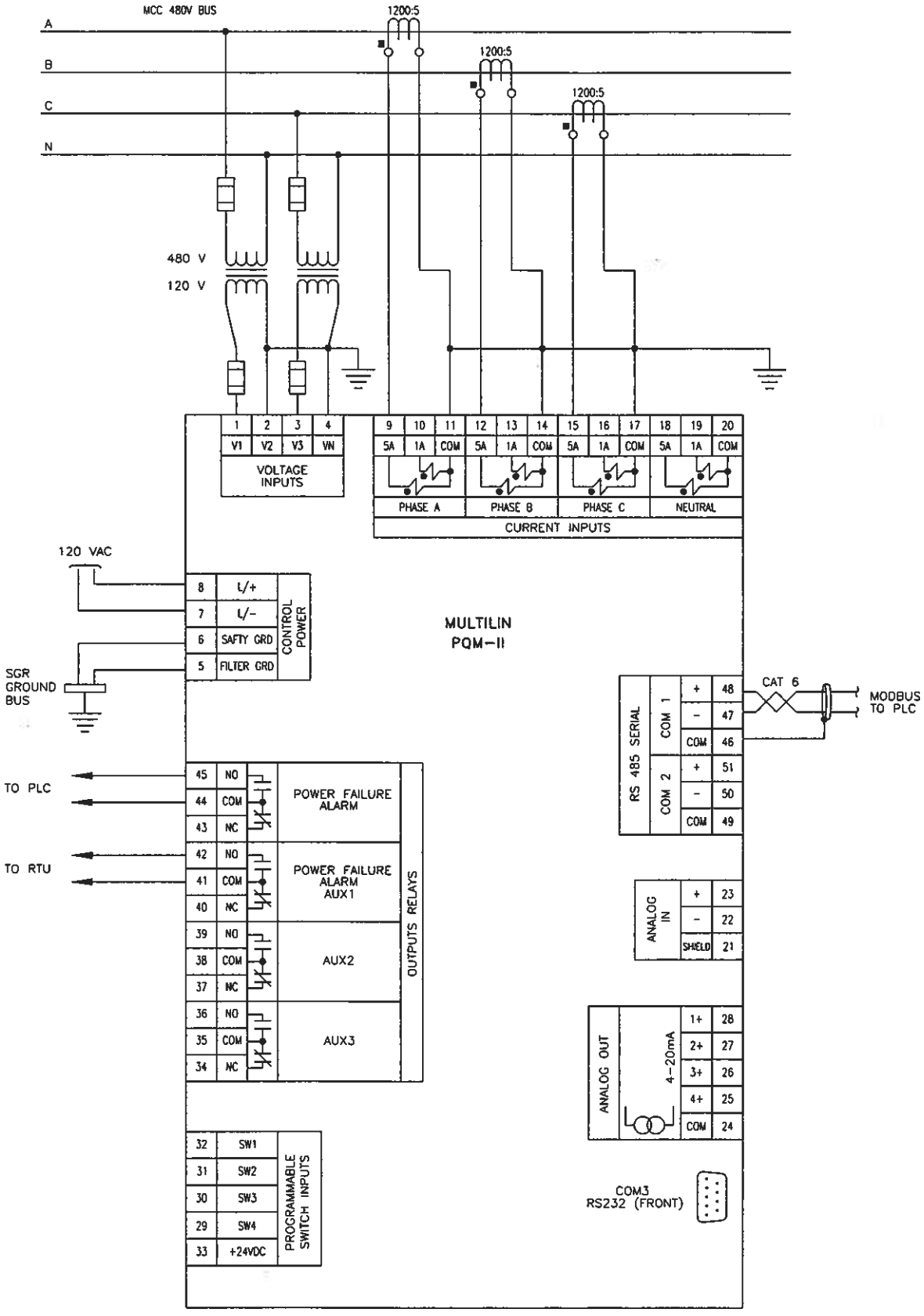

MULTILIN PQM-II METER

TYPICAL 480 VOLT MOTOR CONTROL CENTER PQM-II METER DIAGRAM

NOT TO SCALE E14-7 041707

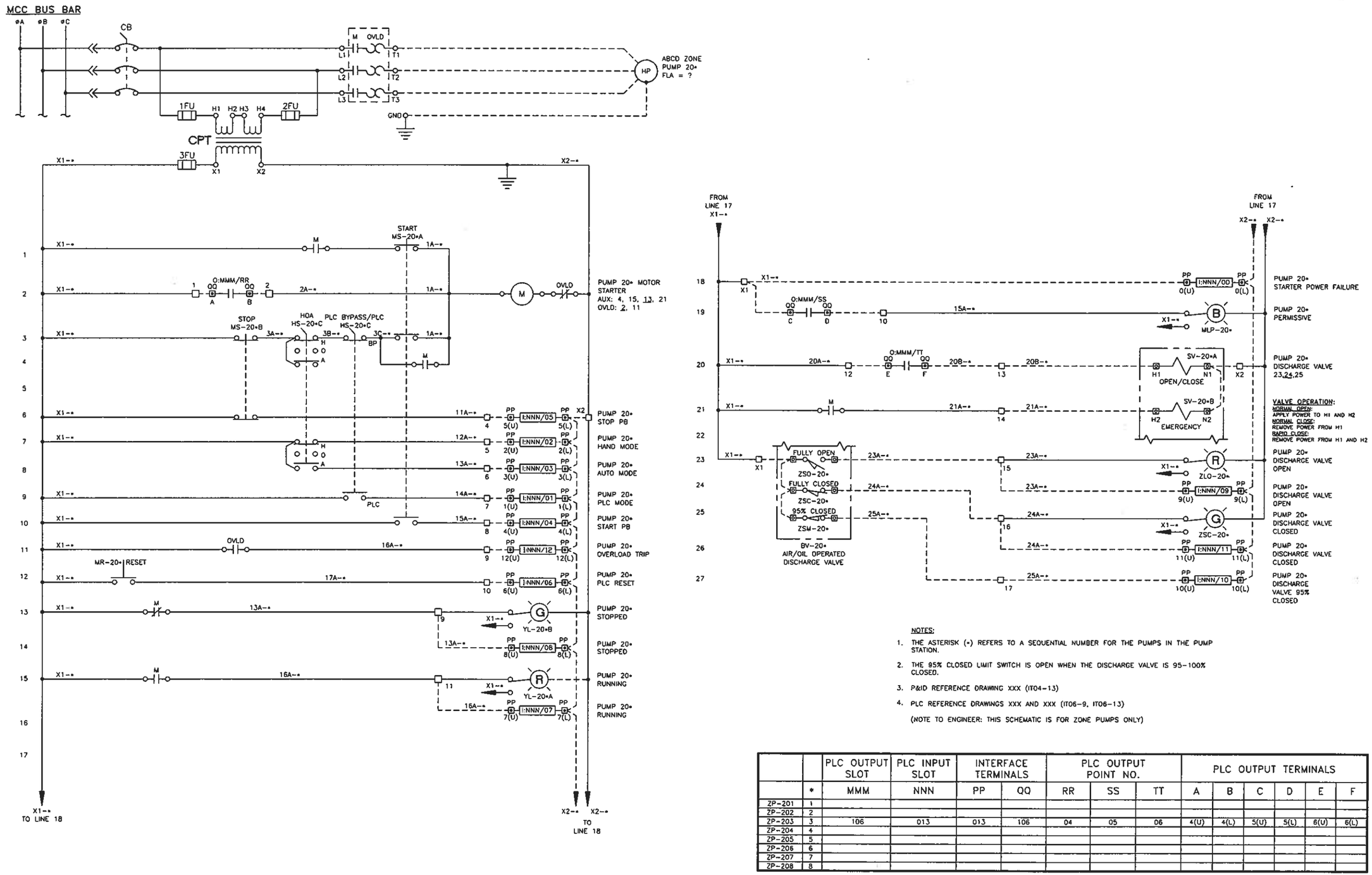

NOTES:

1. THE ASTERISK (*) REFERS TO A SEQUENTIAL NUMBER FOR THE PUMPS IN THE PUMP STATION.
2. THE 95% CLOSED LIMIT SWITCH IS OPEN WHEN THE DISCHARGE VALVE IS 95-100% CLOSED.
3. P&ID REFERENCE DRAWING XXX (IT04-13)
4. PLC REFERENCE DRAWINGS XXX AND XXX (IT06-9, IT06-13)

(NOTE TO ENGINEER: THIS SCHEMATIC IS FOR ZONE PUMPS ONLY)

		PLC OUTPUT SLOT	PLC INPUT SLOT	INTERFACE TERMINALS		PLC OUTPUT POINT NO.			PLC OUTPUT TERMINALS					
	*	MMM	NNN	PP	QQ	RR	SS	TT	A	B	C	D	E	F
ZP-201	1													
ZP-202	2													
ZP-203	3	106	013	013	106	04	05	06	4(U)	4(L)	5(U)	5(L)	6(U)	6(L)
ZP-204	4													
ZP-205	5													
ZP-206	6													
ZP-207	7													
ZP-208	8													

TYPICAL FVNR MOTOR STARTER WITH OLVD'S FOR 1/2 - 75 HP AT 480 VOLTS, 3 DIA, 60HZ SCHEMATIC DIAGRAM

NOT TO SCALE

E14-8 041907

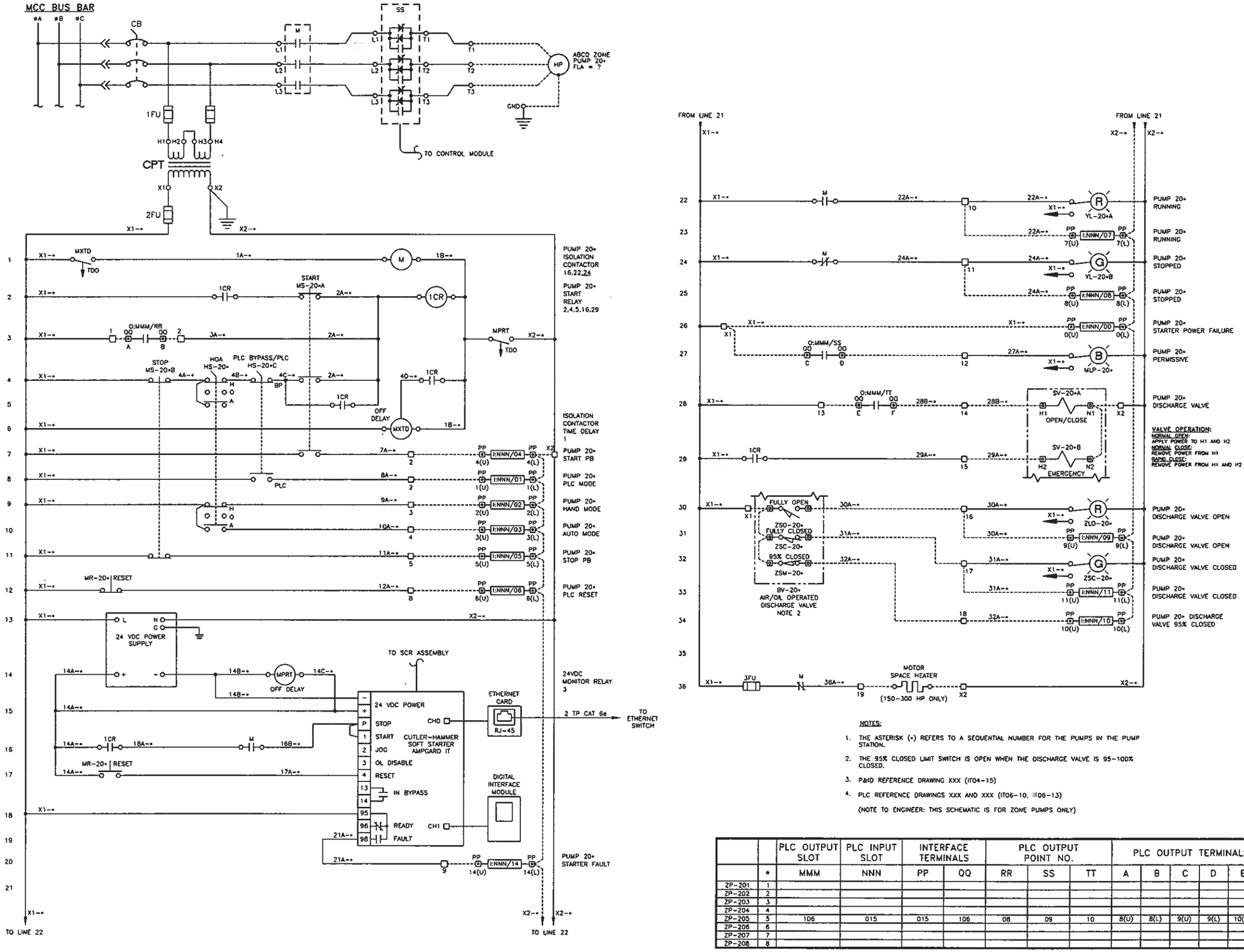

NOTES:

1. THE ASTERISK (*) REFERS TO A SEQUENTIAL NUMBER FOR THE PUMPS IN THE PUMP STATION.
2. THE 95% CLOSED LIMIT SWITCH IS OPEN WHEN THE DISCHARGE VALVE IS 95-100% CLOSED.
3. P&ID REFERENCE DRAWING XXX (IT04-15)
4. PLC REFERENCE DRAWINGS XXX AND XXX (IT06-10, IT06-13)

(NOTE TO ENGINEER: THIS SCHEMATIC IS FOR ZONE PUMPS ONLY)

		PLC OUTPUT SLOT	PLC INPUT SLOT	INTERFACE TERMINALS		PLC OUTPUT POINT NO.			PLC OUTPUT TERMINALS					
	*	MMM	NNN	PP	QQ	RR	SS	TT	A	B	C	D	E	F
ZP-201	1													
ZP-202	2													
ZP-203	3													
ZP-204	4													
ZP-205	5	106	015	015	106	08	09	10	8(U)	8(L)	9(U)	9(L)	10(U)	10(L)
ZP-206	6													
ZP-207	7													
ZP-208	8													

TYPICAL RVSS MOTOR STARTER FOR 100 - 300 HP AT 480 VOLTS, 3 DIA, 60HZ SCHEMATIC DIAGRAM

NOT TO SCALE E14-9 041907

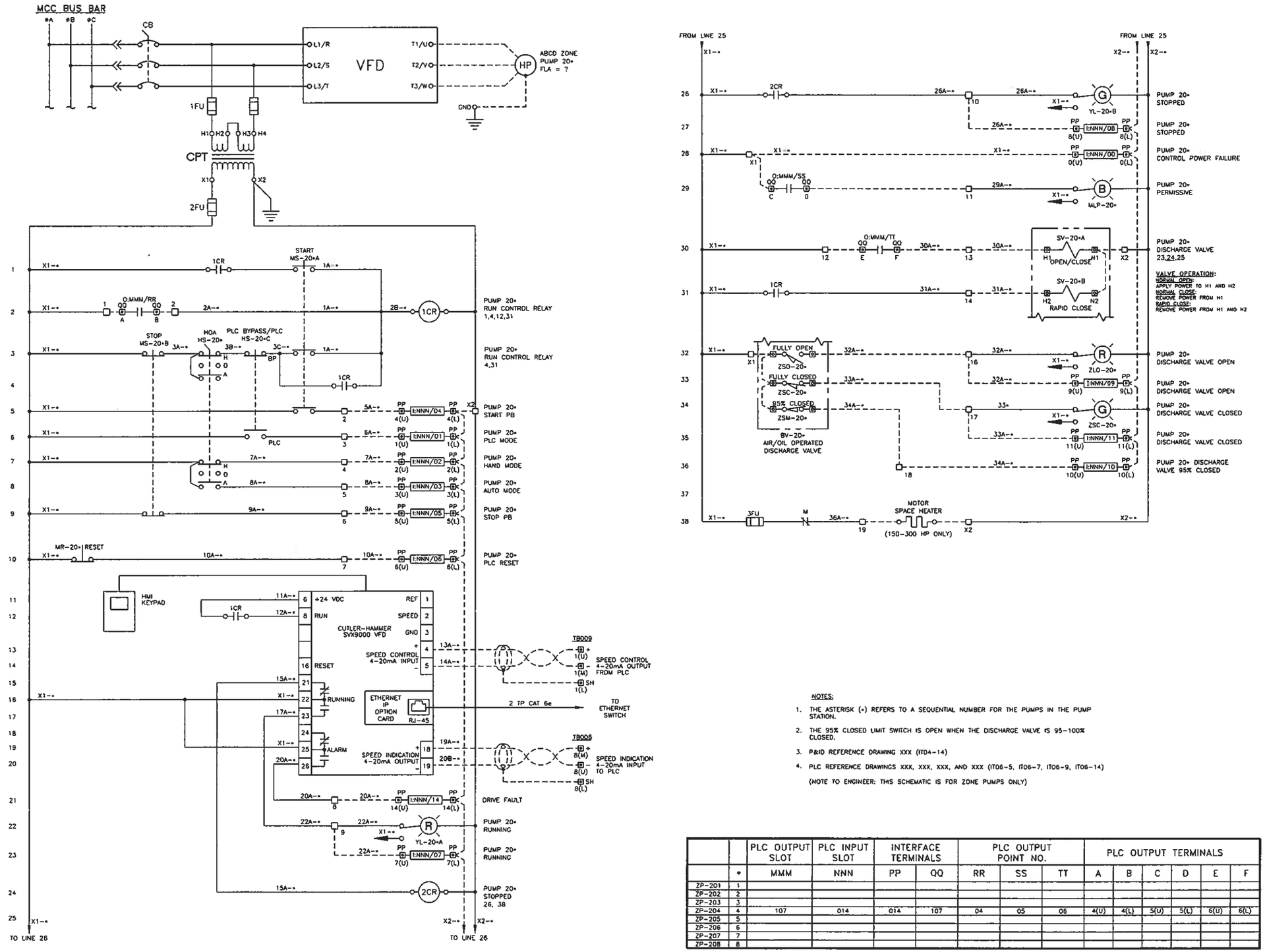

NOTES:

1. THE ASTERISK (*) REFERS TO A SEQUENTIAL NUMBER FOR THE PUMPS IN THE PUMP STATION.
2. THE 95% CLOSED LIMIT SWITCH IS OPEN WHEN THE DISCHARGE VALVE IS 95-100% CLOSED.
3. P&ID REFERENCE DRAWING XXX (ITD4-14)
4. PLC REFERENCE DRAWINGS XXX, XXX, XXX, AND XXX (IT06-5, IT06-7, IT06-9, IT06-14)

(NOTE TO ENGINEER: THIS SCHEMATIC IS FOR ZONE PUMPS ONLY)

		PLC OUTPUT SLOT	PLC INPUT SLOT	INTERFACE TERMINALS		PLC OUTPUT POINT NO.			PLC OUTPUT TERMINALS					
	*	MMM	NNN	PP	QQ	RR	SS	TT	A	B	C	D	E	F
ZP-201	1													
ZP-202	2													
ZP-203	3													
ZP-204	4	107	014	014	107	04	05	06	4(U)	4(L)	5(U)	5(L)	6(U)	6(L)
ZP-205	5													
ZP-206	6													
ZP-207	7													
ZP-208	8													

TYPICAL VFD MOTOR CONTROLLER FOR 100 - 300 HP AT 480 VOLTS, 3 DIA, 60HZ SCHEMATIC DIAGRAM

NOT TO SCALE E14-10 041907

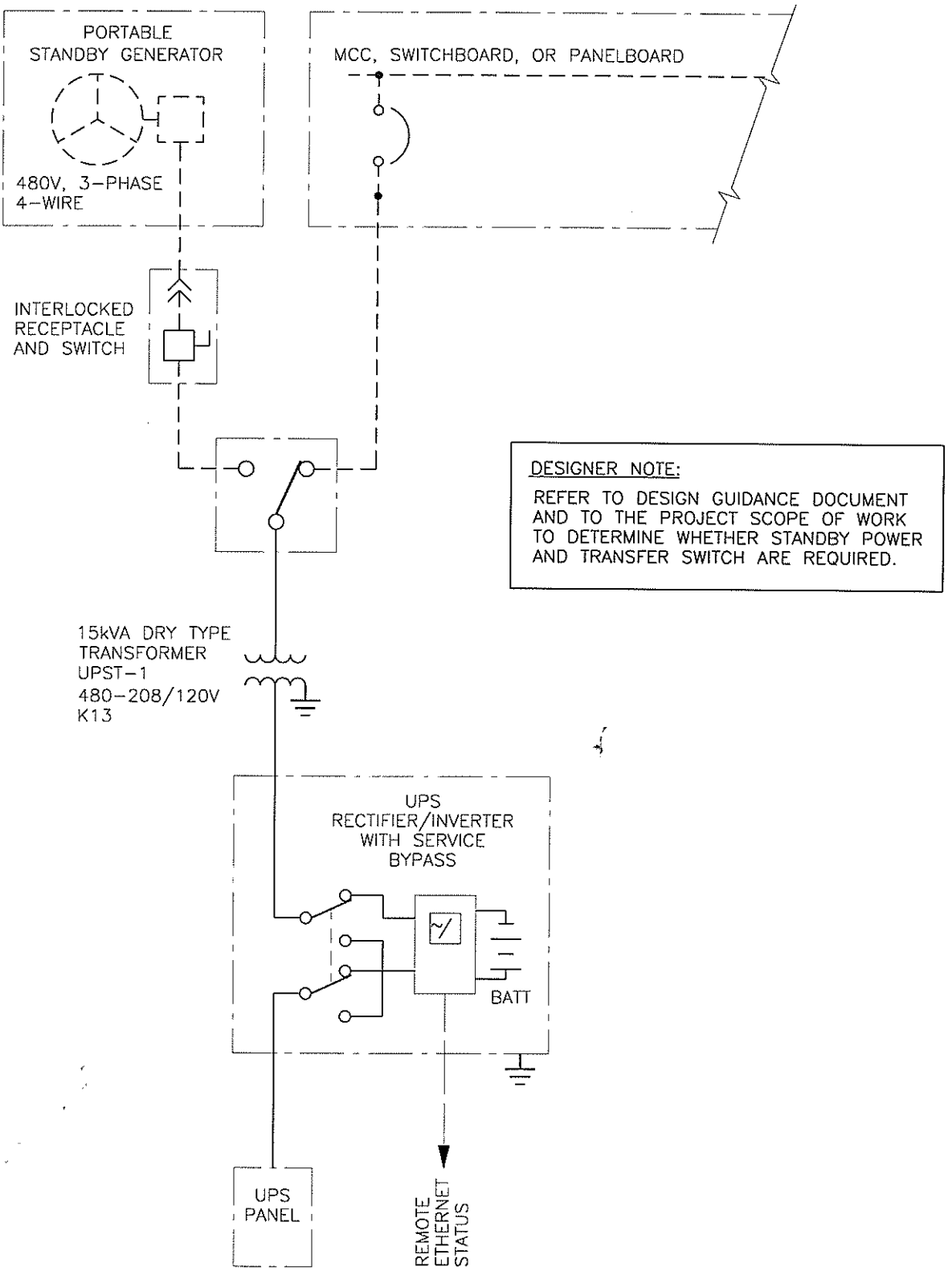

DESIGNER NOTE:

REFER TO DESIGN GUIDANCE DOCUMENT AND TO THE PROJECT SCOPE OF WORK TO DETERMINE WHETHER STANDBY POWER AND TRANSFER SWITCH ARE REQUIRED.

FACILITY UPS DISTRIBUTION

NOT TO SCALE E15-1 060506

FOR REFERENCE ONLY

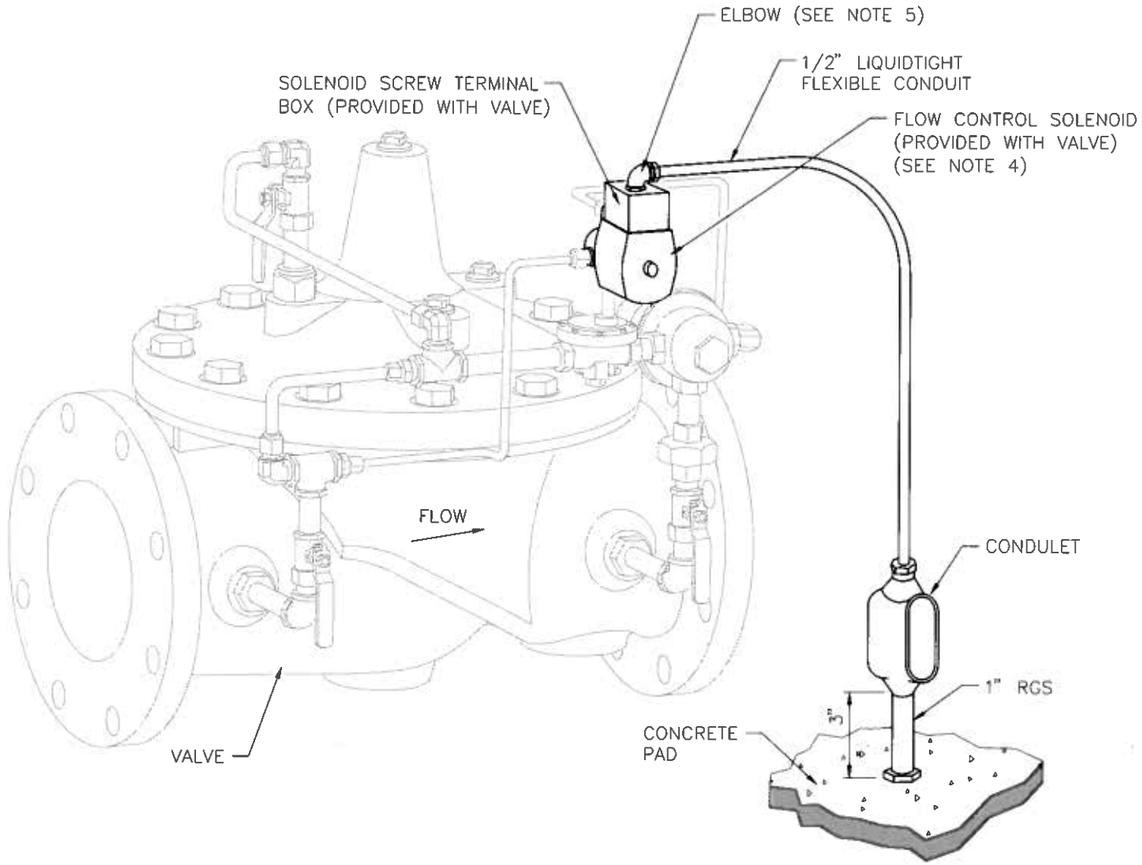

FLOW CONTROL SOLENOID VIEW

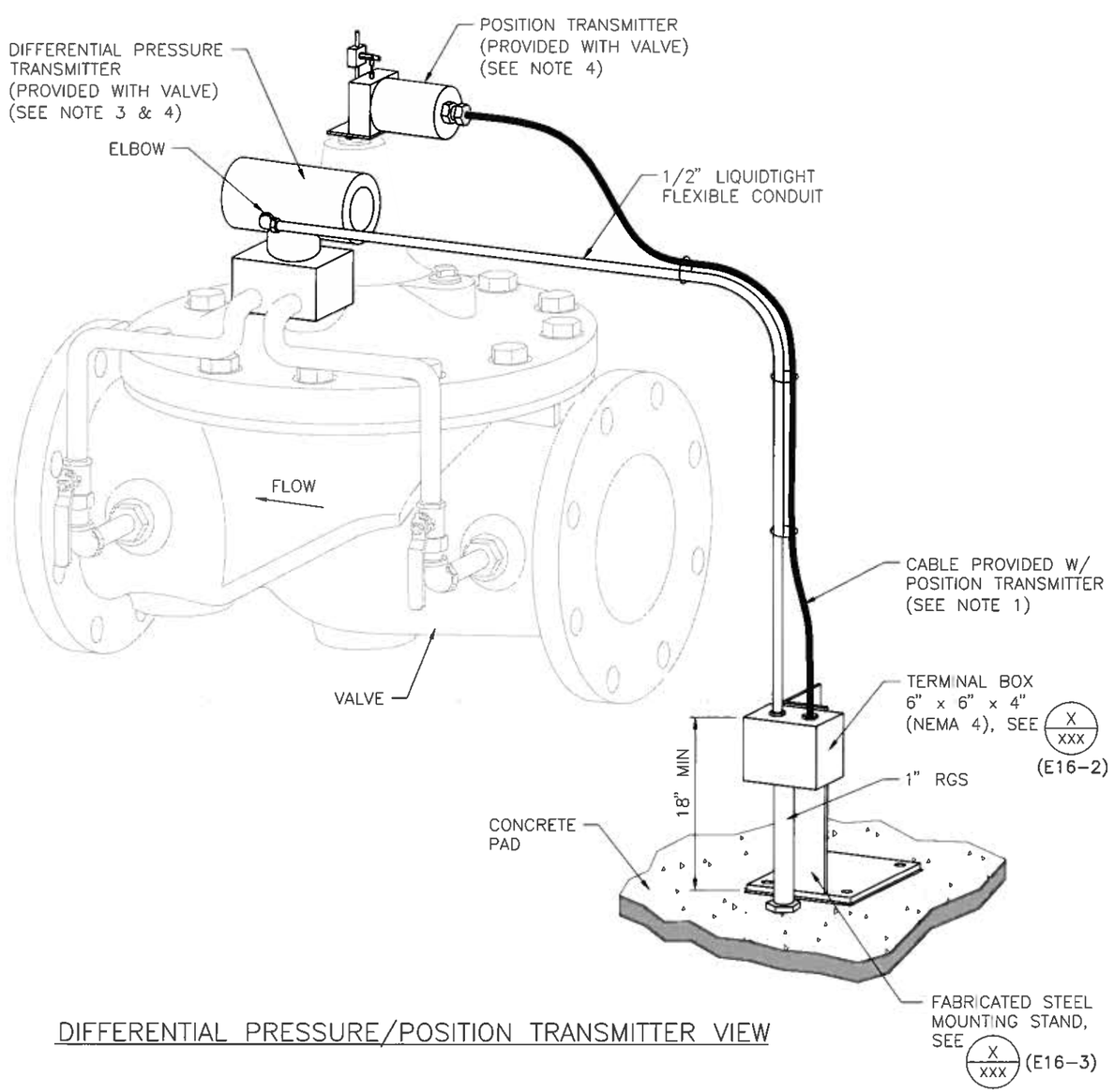

DIFFERENTIAL PRESSURE/POSITION TRANSMITTER VIEW

NOTES:

1. TIE WRAP POSITION TRANSMITTER CABLE TO 1/2" LIQUIDTIGHT FROM DIFFERENTIAL PRESSURE TRANSMITTER.
2. USE APPROPRIATE BUSHINGS TO MAINTAIN NEMA 4 RATING.
3. ALIGN DIFFERENTIAL PRESSURE TRANSMITTER HOUSING IN THE SAME DIRECTION AS THE VALVE.
4. ASSEMBLE LABELED VALVE COMPONENTS AS DETAILED, MODIFYING THE ASSEMBLIES FROM THE FACTORY AS REQUIRED TO MATCH THESE DETAILS.
5. ELBOW MAY BE OMITTED IF FLOW CONTROL SOLENOID IS ROTATED FOR DIRECT CONNECTION WITH THE 1/2" LIQUIDTIGHT FLEXIBLE CONDUIT.

PRV FLOW METERING INSTALLATION DETAILS

NOT TO SCALE

E16-1 122407

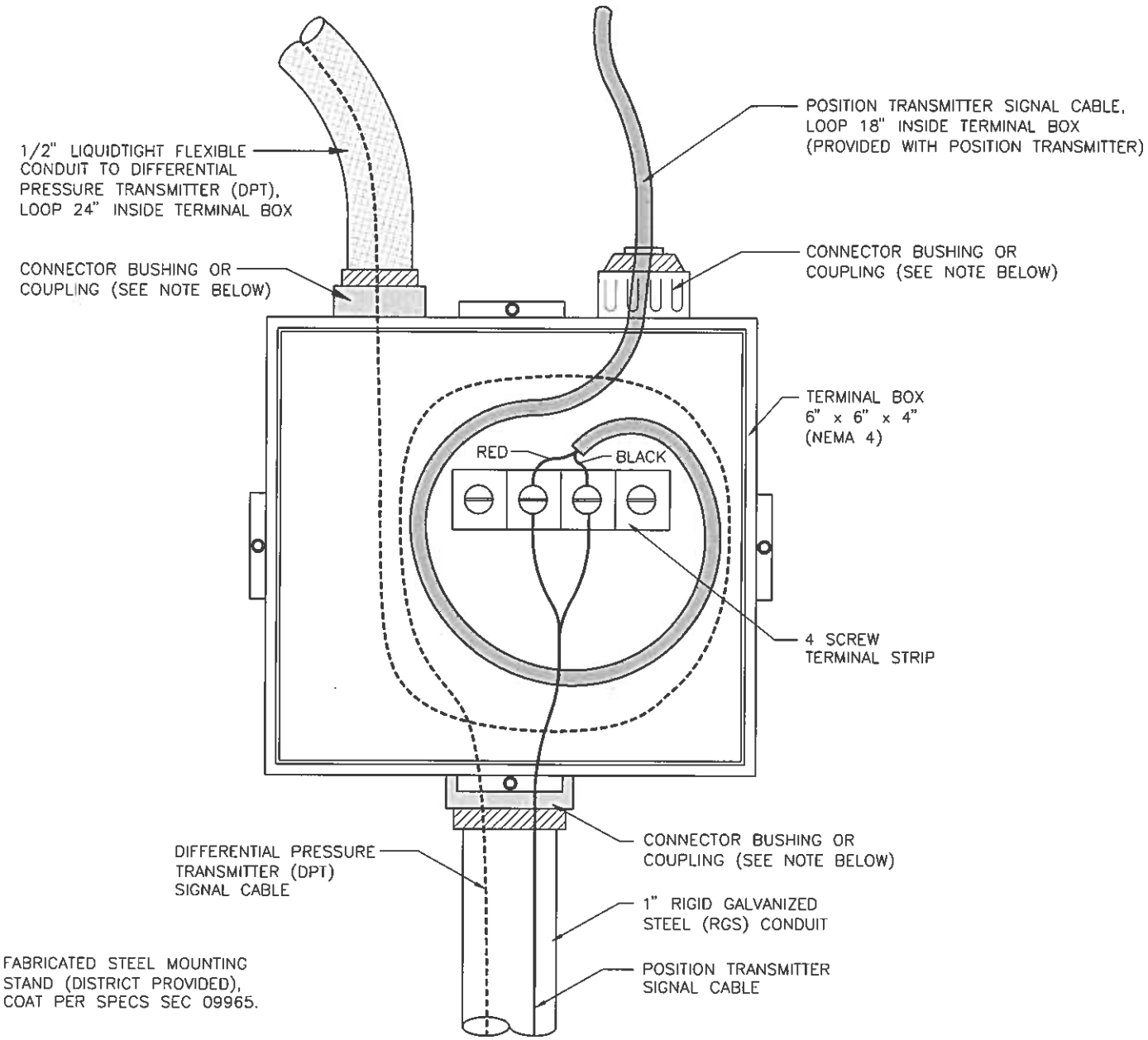

NOTE:
USE APPROPRIATE BUSHINGS AND COUPLINGS TO MAINTAIN NEMA 4 RATING.

TERMINAL BOX DETAIL

NOT TO SCALE E16-2 122407

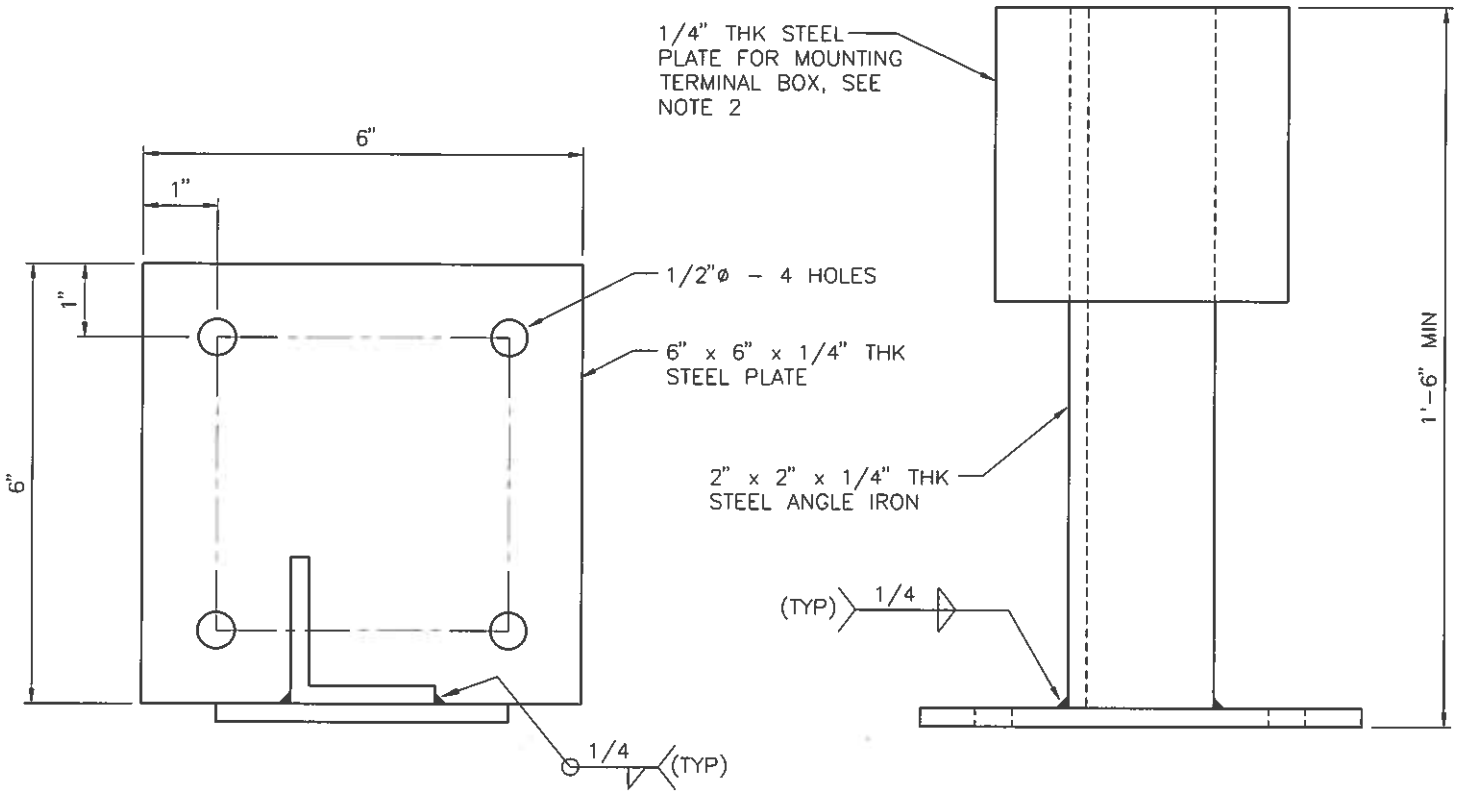

NOTES:

1. ALL SHARP EDGES SHALL BE DEBURRED.
2. STEEL PLATE DIMENSIONS ARE TO BE DETERMINED BY THE SIZE OF TERMINAL BOX USED.
3. PAINT AND COAT STAND ASSEMBLY PER SPECS SEC 09965.
4. UTILIZE APPROVED EXPANSION ANCHORS (SIZE AS REQUIRED) TO ATTACH STAND ASSEMBLY TO CONCRETE PAD.

TERMINAL BOX MOUNTING STAND

NOT TO SCALE E16-3 122407

DESIGNER NOTE:
PRV ASSEMBLY SHOWN IS AN EXAMPLE ONLY. SIZE OF ACTUAL ASSEMBLY, CONCRETE PAD AND PRV ENCLOSURE WILL NEED TO BE DRAWN TO SCALE BASED ON PROJECT REQUIREMENTS. DIMENSIONS TO CONDUIT RISERS AND TO PRV ENCLOSURE FROM ASSEMBLY ARE TO BE AS SHOWN (TYP).

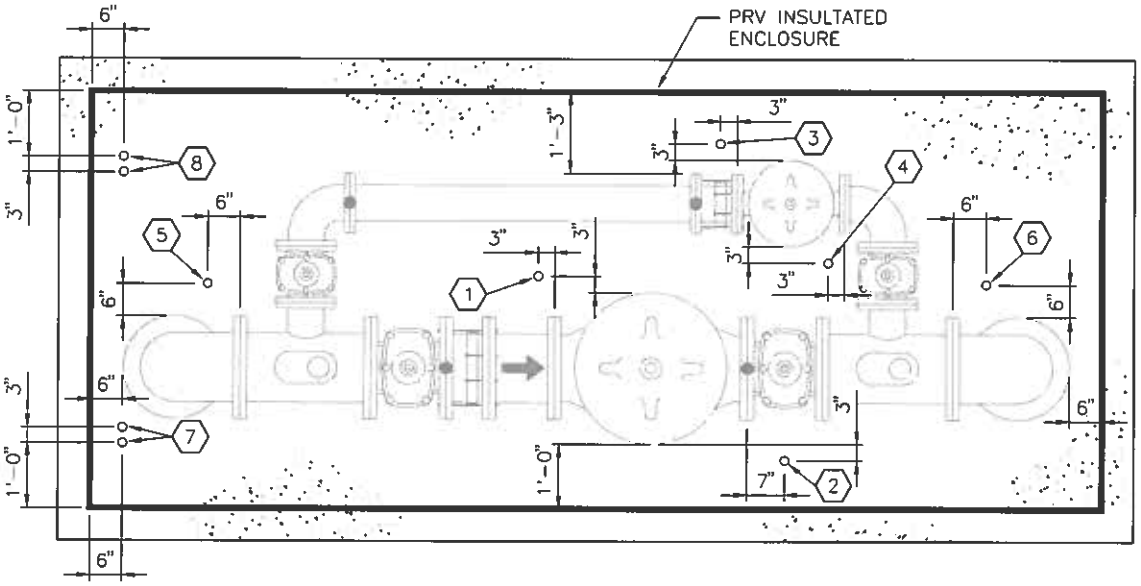

1. DIFFERENTIAL PRESSURE/POSITION TRANSMITTER (MAIN PRV)
2. VALVE ENABLE/DISABLE SOLENOID (MAIN PRV)
3. DIFFERENTIAL PRESSURE/POSITION TRANSMITTER (BYPASS PRV)
4. VALVE ENABLE/DISABLE SOLENOID (BYPASS PRV)
5. PRESSURE TRANSMITTER (UPSTREAM)
6. PRESSURE TRANSMITTER (DOWNSTREAM)
7. SPARES (FROM ELECTRICAL SERVICE PEDESTAL)
8. SPARES (FROM TELEMETRY ENCLOSURE)

NOTE:
ALL DIMENSIONS SHOWN ARE APPROXIMATE ONLY. CONTRACTOR TO ESTABLISH CONDUIT RISER LOCATIONS AFTER PRV AND PIPING IS COMPLETELY INSTALLED, TERMINAL BOXES LOCATED AND THE INSULATED ENCLOSURE SIZE VERIFIED TO INSURE CORRECT RISER POSITIONING PRIOR TO POURING PRV CONCRETE PAD AND INSULTATED ENCLOSURE INSTALLATION (TYP).

PRV CONDUIT RISER LAYOUT

SCALE: 1/2" = 1'-0" E16-4 122607

PRV NO. XX SERVICE PEDESTAL SCHEDULE

PANEL NO. P1 MAINS 100 MAIN BKR 60 SURFACE ☐ FLUSH ☐ INDOOR ☐ OUTDOOR ☒
VOLTS 120/240 PHASE 1 WIRE 3 GROUND SOLID CU NEUTRAL FULL S/N
MIN KAIC 10 RMS SYM DOOR: HINGED ☐ DOOR-IN-DOOR ☐ LATCH/LOCK ☐ SVC ENT ☒
BUS: ALUM. ☐ COPPER ☒ BREAKERS: SLIP-ON ☐ BOLT-ON ☒ SITE LOCATION _____

DESCRIPTION	WATTS L1	WATTS L2	BKR	POLE		POLE	BKR	WATTS L1	WATTS L2	DESCRIPTION
RTU/FLOW COMPUTERS	180		1/15	1		2	1/15			SPARE
RTU RECEPTACLE		720	1/20	3		4				SPACE
SPACE				5		6				SPACE
SPACE				7		8				SPACE
SPACE				9		10				SPACE
SPACE				11		12				SPACE
	180	720								

TOTAL AMPS= 3.75A

PRV PANELBOARD SCHEDULE

NOT TO SCALE E16-5 122407

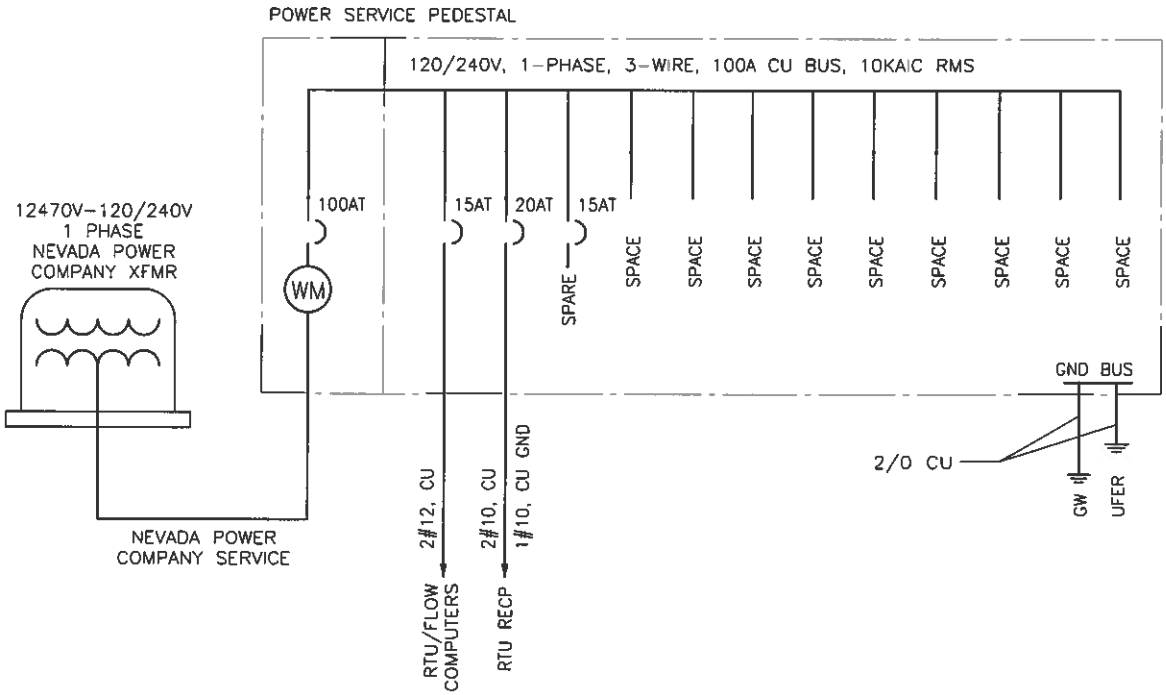

PRV ONE-LINE DIAGRAM

NOT TO SCALE E16-6 122407

LAS VEGAS VALLEY WATER DISTRICT
DESIGN DETAIL STANDARDS

TABLE OF CONTENTS

DESCRIPTION	REV. DATE	DWG NO.
INSTRUMENTATION		
PRESSURE STATION AND PRV/FLOW STATION ASSEMBLY DETAILS		
Pressure Station Assembly	11-15-06	IT01-1
Pressure Station Enclosure and Foundation	11-15-06	IT01-2
Pressure Station Conduit Layout Diagram	11-15-06	IT01-3
PRV/Flow Station Enclosure	11-15-06	IT01-4
PRV/Flow Station Conduit Layout Diagram	11-15-06	IT01-5
TELEMETRY ENCLOSURE DETAILS		
PRV/Flow Station Enclosure Bolt Hole Alignments (Top & Side)	11-15-06	IT02-1
PRV/Flow Station Enclosure Sunshield	11-15-06	IT02-2
Enclosure Sunshield Mounting Spacers	11-15-06	IT02-3
General Fabrication Notes	11-15-06	IT02-4
PRV/Flow Station Enclosure Conduit and Battery Layout (Solar)	11-15-06	IT02-5
INSTRUMENTATION GENERAL DETAILS		
Pressure Transmitter Assembly and Connection Detail	10-29-07	IT03-1
Future Pressure Transmitter Assembly Outlet	05-07-04	IT03-2
Antenna Detail	06-23-10	IT03-3
Solar Panel Installation Detail	07-23-03	IT03-4
Conduit Support Detail	06-30-03	IT03-5
Level Switch Detail	06-30-03	IT03-6
Pump Station “RTU” Enclosure Conduit Layout	06-30-03	IT03-7
Typical 4-20mA Transmitter and Remote Display	06-30-03	IT03-8
P & ID Legend and Abbreviations	04-19-07	IT04-1
PRV Process and Instrumentation Diagram	08-01-06	IT04-2
PRV and Solenoid Positioning Table	08-01-06	IT04-2A
Well Pump Process and Instrumentation Diagram	10-10-05	IT04-3
Booster Pump Process and Instrumentation Diagram	10-10-05	IT04-4
Disinfection System and Reservoir Mixer Process and Instrumentation Diagram	10-24-05	IT04-5
NAOCL Storage and Feed System Process and Instrumentation Diagram	04-19-07	IT04-6
Valve Vault Sump Pump Process and Instrumentation Diagram	10-14-05	IT04-7
Building and Site Systems Process and Instrumentation Diagram	10-17-05	IT04-8
Drain/Underdrain Structure Sump Pumps Process and Instrumentation Diagram	10-17-05	IT04-9
Elevator Sump Pump Process and Instrumentation Diagram	10-19-05	IT04-10
Facility Air System Process and Instrumentation Diagram	04-19-07	IT04-11

TABLE OF CONTENTS

DESCRIPTION	REV. DATE	DWG NO.
Zone Pump String Reservoir and Vault Process and Instrumentation Diagram	04-19-07	IT04-12
Zone Pump String Typical 480V FVNR Motor Starter Process and Instrumentation Diagram	04-19-07	IT04-13
Zone Pump String Typical 480V VFD - Driven Motor Process and Instrumentation Diagram	04-19-07	IT04-14
Zone Pump String Typical 480V RVSS Motor Starter Process and Instrumentation Diagram	04-19-07	IT04-15
Zone Pump String Typical 4160V RVSS Motor Starter Process and Instrumentation Diagram	04-19-07	IT04-16
Zone Pump String Typical 4160V RVAT Motor Starter Process and Instrumentation Diagram	04-19-07	IT04-17
Zone Pump String Typical Discharge Control Valve Process and Instrumentation Diagram	04-19-07	IT04-18
Chlorine Analyzer and Washdown System Process and Instrumentation Diagram	06-15-10	IT04-19
Discharge Piping and Vault Process and Instrumentation Diagram	04-17-07	IT04-20
Miscellaneous Systems Process and Instrumentation Diagram	04-17-07	IT04-21
RTU & PLC LAYOUT AND DIAGRAM DETAILS		
RTU Control Panel Layout Process and Instrumentation Diagram	05-08-07	IT05-1
RTU Control Panel Bill of Materials	04-18-07	IT05-2
RTU Control Panel Power Distribution Process and Instrumentation Diagram	04-18-07	IT05-3
RTU Control Panel I/O Wiring Diagram	04-19-07	IT05-4
PLC System Network Process and Instrumentation Diagram	04-19-07	IT06-1
PLC Control Panel Layout	04-18-07	IT06-2
PLC Control Panel Bill of Materials	04-18-07	IT06-3
PLC Control Panel Power Distribution Process and Instrumentation Diagram	04-19-07	IT06-4
PLC I/O Wiring Diagram Chassis 0, Slots 5 and 6	04-19-07	IT06-5
PLC I/O Wiring Diagram Chassis 0, Slots 7 and 8	04-19-07	IT06-6
PLC I/O Wiring Diagram Chassis 0, Slots 9 and 10	04-19-07	IT06-7
PLC I/O Wiring Diagram Chassis 0, Slots 11 and 12	04-19-07	IT06-8
PLC I/O Wiring Diagram Chassis 0, Slots 13 and 14	04-19-07	IT06-9
PLC I/O Wiring Diagram Chassis 0, Slots 15 and 16	04-19-07	IT06-10
PLC I/O Wiring Diagram Chassis 1, Slots 1 and 2	04-19-07	IT06-11
PLC I/O Wiring Diagram Chassis 1, Slots 3 and 4	04-19-07	IT06-12

LAS VEGAS VALLEY WATER DISTRICT
DESIGN DETAIL STANDARDS

TABLE OF CONTENTS

DESCRIPTION	REV. DATE	DWG NO.
PLC I/O Wiring Diagram Chassis 1, Slots 5 and 6	04-19-07	IT06-13
PLC I/O Wiring Diagram Chassis 1, Slots 7 and 8	04-19-07	IT06-14
PLC I/O Wiring Diagram Chassis 1, Slots 9 and 10	04-19-07	IT06-15

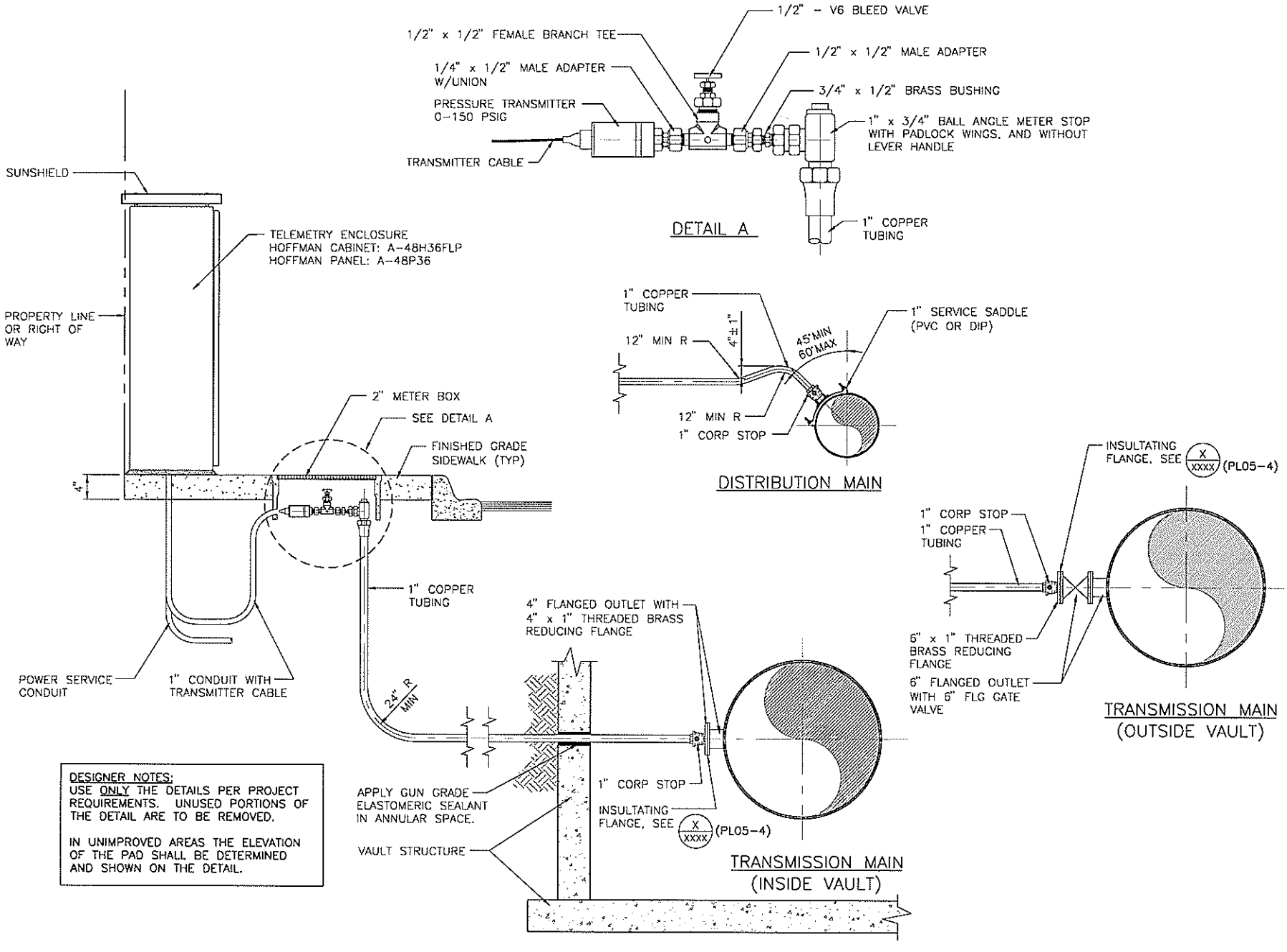

DESIGNER NOTES:
USE ONLY THE DETAILS PER PROJECT REQUIREMENTS. UNUSED PORTIONS OF THE DETAIL ARE TO BE REMOVED.

IN UNIMPROVED AREAS THE ELEVATION OF THE PAD SHALL BE DETERMINED AND SHOWN ON THE DETAIL.

NOTE:
ALL COPPER TUBING SHALL BE WRAPPED WITH TWO LAYERS OF SIX (6) MIL POLYETHYLENE AND BACKFILLED ALL AROUND WITH 4" MINIMUM OF SAND.

PRESSURE STATION ASSEMBLY

NOT TO SCALE ITQ1-1 111506

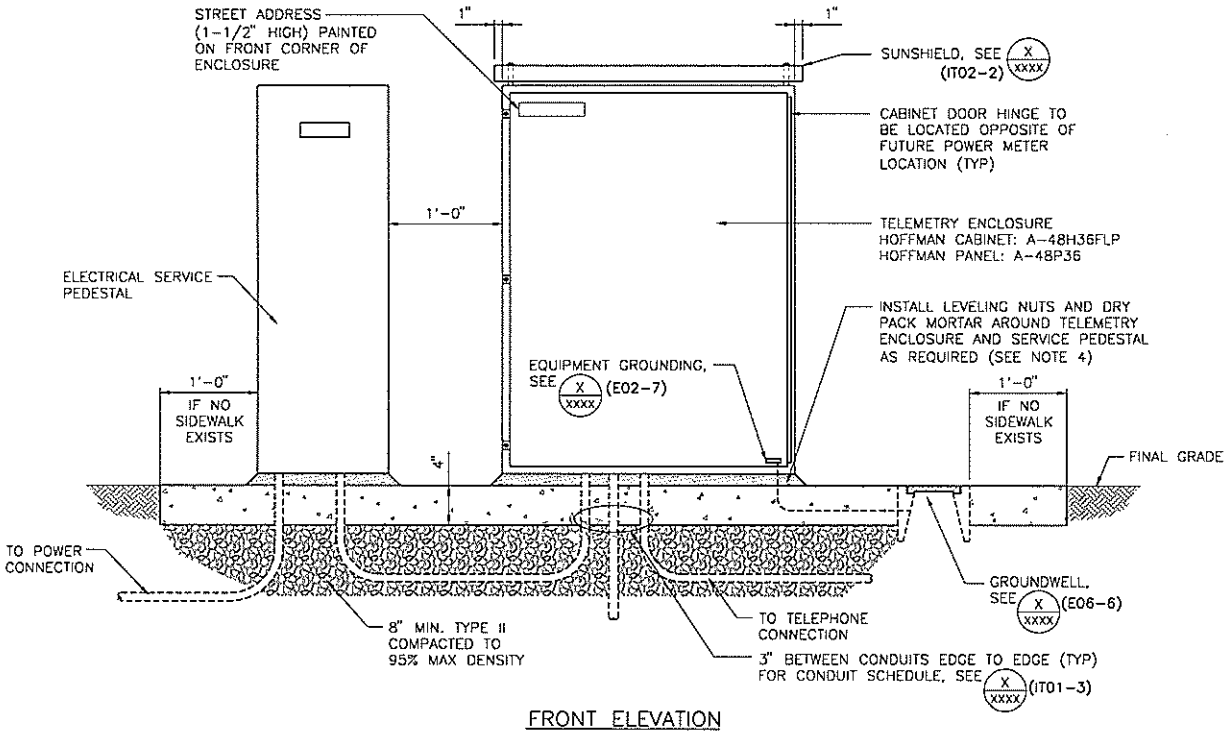

FRONT ELEVATION

NOTES:

1. MAKE ALL CONDUIT PENETRATIONS INTO THE BOTTOM OF THE TELEMETRY ENCLOSURE.
2. INSTRUMENTATION WIRING SHALL NOT BE RUN IN THE SAME CONDUIT AS 120VAC CONTROL WIRING.
3. THE TELEMETRY ENCLOSURE EXTERIOR FINISH SHALL BE POLYESTER URETHANE (POWDER COAT) WHITE.
4. DRILL SIX (6) 9/16" HOLES THROUGH ENCLOSURE/PEDESTAL AND INTO CONCRETE PAD. INSTALL ADHESIVE CARTRIDGES, 1/2" x 6" STAINLESS STEEL THREADED ANCHOR RODS WITH TWO (2) STAINLESS STEEL WASHERS AND LEVELING NUTS. INSTALL DRY PACK MORTAR IN ANNULAR SPACE AROUND ENCLOSURE/PEDESTAL AFTER ANCHOR RODS AND LEVELING NUTS ARE INSTALLED

DESIGNER NOTES:
WHERE THERE IS NO EXISTING SIDEWALK OR IMPROVEMENT THE ELEVATION ON THE FINISHED GRADE OF THE PAD SHALL BE DETERMINED BY THE ENGINEER. PROVIDE ELEVATION AT PAD.

AN LVVWD PERMANENT EASEMENT WILL BE REQUIRED FOR DISTRICT FACILITIES LOCATED OUTSIDE PUBLIC RIGHTS-OF-WAY. SHOW EASEMENT LIMITS ON DETAIL AS REQUIRED.

WHEN ELECTRICAL PEDESTAL IS TO BE UTILIZED WITHIN PROJECT THEN ELIMINATE THE SOLAR ANTENNA PORTION OF DETAIL.

WHEN SOLAR ANTENNA IS TO BE UTILIZED WITHIN PROJECT THEN MODIFY "ELECTRICAL SERVICE PEDESTAL" LABELS TO STATE "FUTURE ELECTRICAL SERVICE PEDESTAL" AND SHOW (2) ELECTRICAL STUB-OUTS AT THE FUTURE PEDESTAL LOCATION.

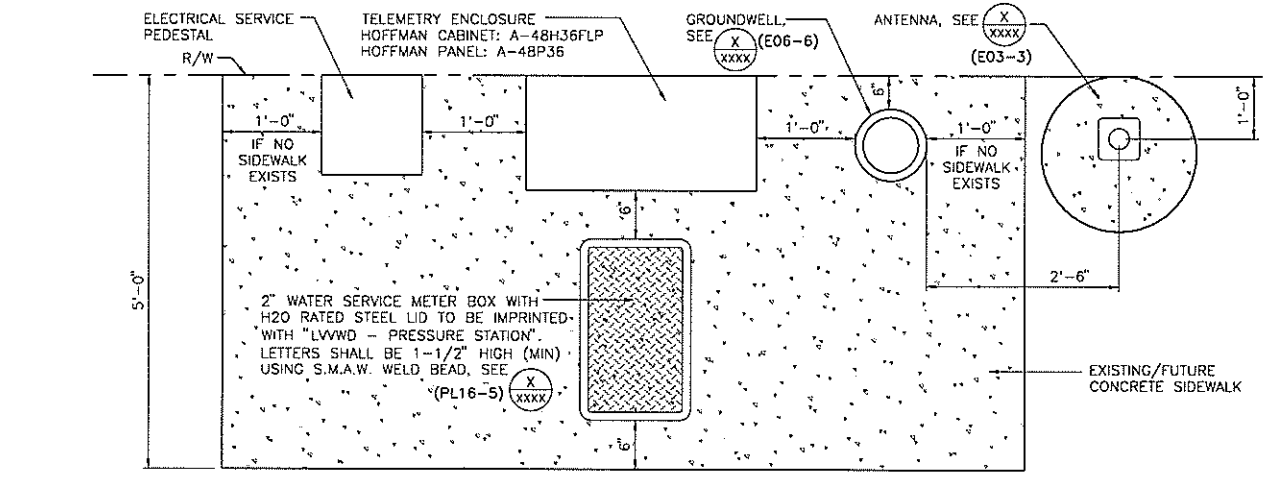

PLAN

PRESSURE STATION ENCLOSURE AND FOUNDATION

NOT TO SCALE

IT01-2 111506

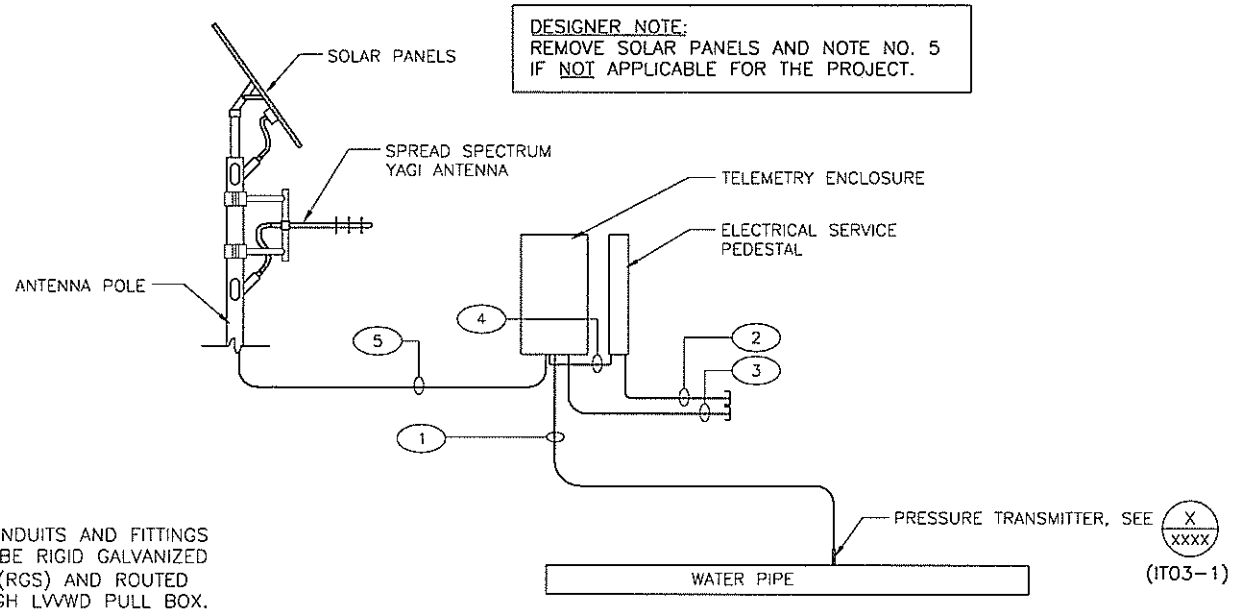

DESIGNER NOTE:
REMOVE SOLAR PANELS AND NOTE NO. 5 IF NOT APPLICABLE FOR THE PROJECT.

NOTE:
ALL CONDUITS AND FITTINGS SHALL BE RIGID GALVANIZED STEEL (RGS) AND ROUTED THROUGH LVVWD PULL BOX.

DESIGNER NOTE:
SIZE WIRE AND CONDUIT PER SPECIFIC JOB REQUIREMENTS.

TYPICAL CONDUIT, WIRE & CABLE SCHEDULE

LINE NO.	CONDUIT SIZE	CONDUCTORS	FROM	TO	ROUTE	REMARKS
(1)	1"	MANUFACTURER SUPPLIED CABLE	TELEMETRY ENCLOSURE	PRESSURE TRANSMITTER	UNDERGROUND	
(2)	4"	PULL CORD	ELECTRICAL SERVICE PEDESTAL	POWER STUB OUT OR CONNECTION	UNDERGROUND	PER POWER COMPANY REQUIREMENTS
(3)	2"	PULL CORD	TELEMETRY ENCLOSURE	TELEPHONE STUB OUT OR CONNECTION	UNDERGROUND	PER TELEPHONE COMPANY REQUIREMENTS
(4)	(2) – 1"	PULL CORD	ELECTRICAL SERVICE PEDESTAL LOCATION	TELEMETRY ENCLOSURE	UNDERGROUND	(1) – RTU CIRCUITS (1) – SPARE W/ PULL CORD
(5)	2"	(1) – 1/2" HELIAX (2) – #14 (2) – #12	ANTENNA POLE	TELEMETRY ENCLOSURE	UNDERGROUND	(2) – #12 FOR SOLAR PANELS (2) – #14 FOR SOLAR PANELS THEFT PROTECTION

PRESSURE STATION CONDUIT LAYOUT DIAGRAM

NOT TO SCALE IT01-3 111506

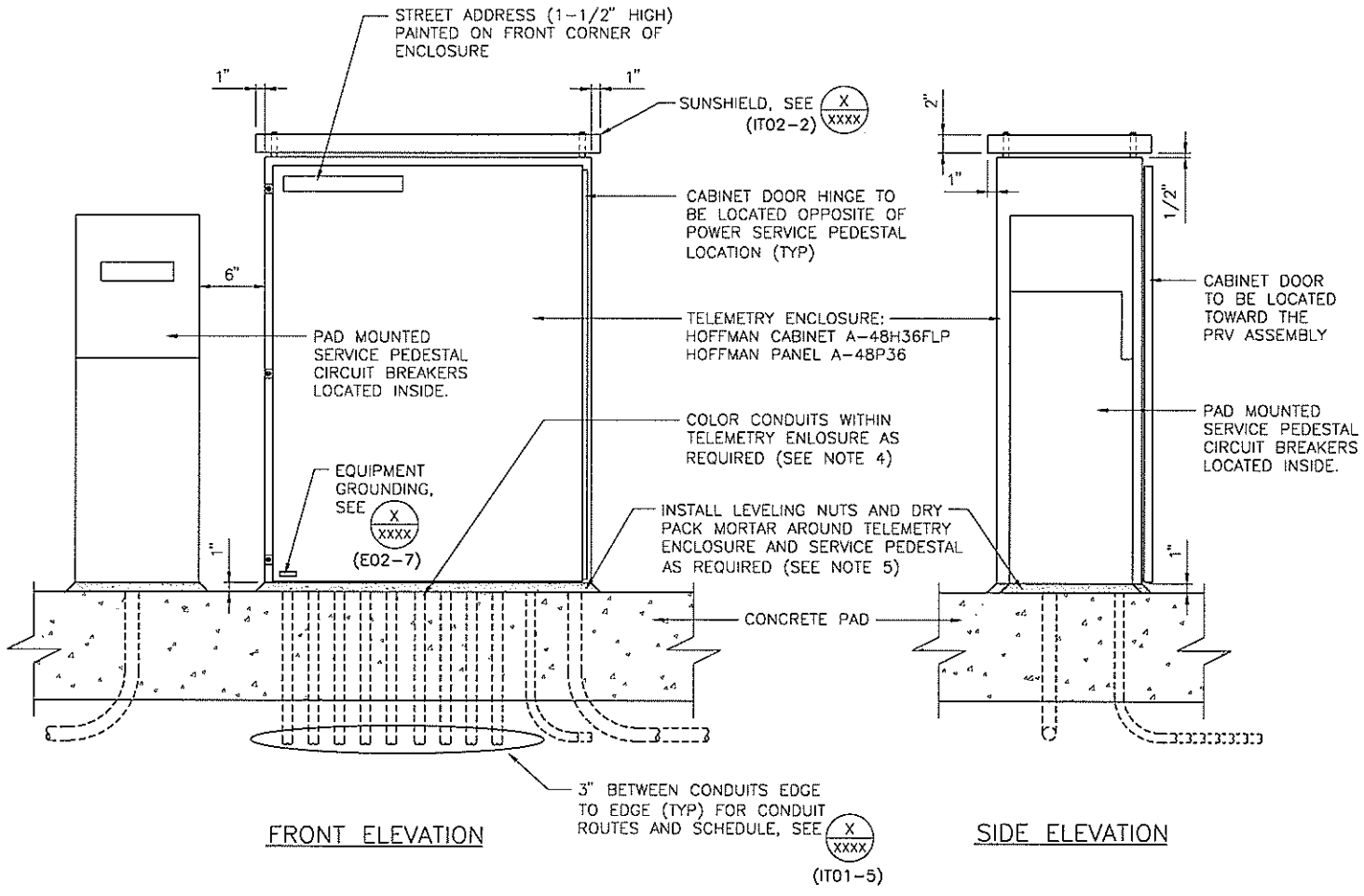

NOTES:

1. MAKE ALL CONDUIT PENETRATIONS INTO THE BOTTOM OF THE RTU ENCLOSURE.
2. INSTRUMENTATION WIRING SHALL NOT BE RUN IN THE SAME CONDUIT AS 120VAC CONTROL WIRING.
3. THE RTU ENCLOSURE EXTERIOR FINISH SHALL BE POLYESTER URETHANE (POWDER COAT) WHITE.
4. ALL CONDUITS WITHIN TELEMETRY ENCLOSURE SHALL HAVE DIFFERENT COLORS PAINTED (3" MIN, BOTH INSIDE AND OUTSIDE). COLORS USED SHALL MATCH COLORS PAINTED INSIDE CONDUITS AT CONDUIT RISERS IN CONCRETE SLAB FOR CONDUIT ROUTE IDENTIFICATION (TYP).
5. DRILL SIX (6) 9/16" HOLES THROUGH ENCLOSURE/PEDESTAL AND INTO CONCRETE PAD. INSTALL ADHESIVE CARTRIDGES, 1/2" x 6" STAINLESS STEEL THREADED ANCHOR RODS WITH TWO (2) STAINLESS STEEL WASHERS AND LEVELING NUTS. INSTALL DRY PACK MORTAR IN ANNULAR SPACE AROUND ENCLOSURE/PEDESTAL AFTER ANCHOR RODS AND LEVELING NUTS ARE INSTALLED

PRV/FLOW STATION ENCLOSURE

NOT TO SCALE IT01-4 111506

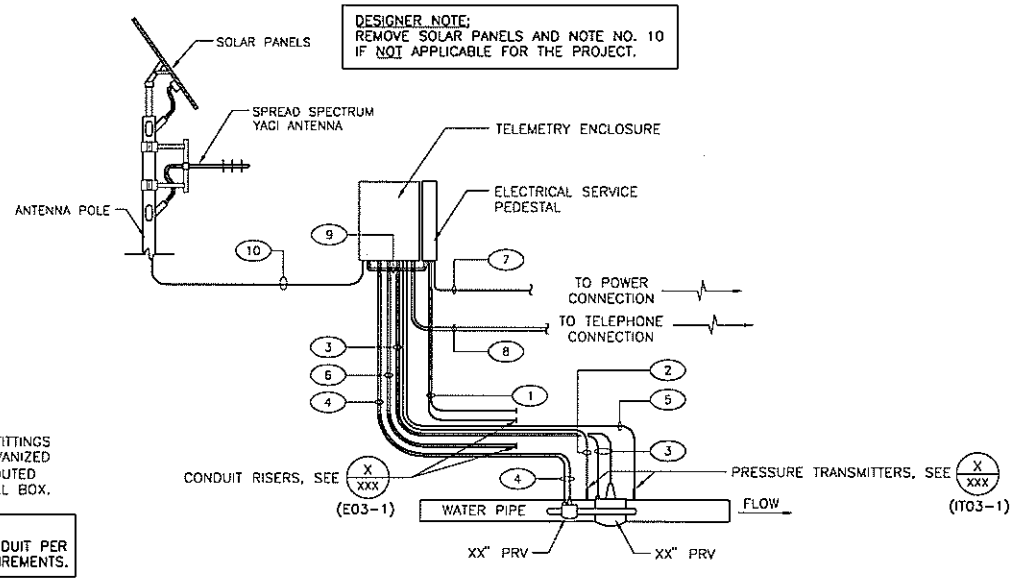

DESIGNER NOTE:
REMOVE SOLAR PANELS AND NOTE NO. 10 IF NOT APPLICABLE FOR THE PROJECT.

NOTE:
ALL CONDUITS AND FITTINGS SHALL BE RIGID GALVANIZED STEEL (RGS) AND ROUTED THROUGH LVVWD PULL BOX.

DESIGNER NOTE:
SIZE WIRE AND CONDUIT PER SPECIFIC JOB REQUIREMENTS.

TYPICAL CONDUIT, WIRE & CABLE SCHEDULE

LINE NO.	CONDUIT SIZE	CONDUCTORS	FROM	TO	ROUTE	REMARKS
(1)	(2) – 1"	PULL CORD	ELECTRICAL SERVICE PEDESTAL	PRV ENCLOSURE	BELOW GRADE (RGS) ABOVE GRADE (LIQUIDTIGHT)	SPARES W/PULL CORDS
(2)	1"	(1) – 1PR #18 SH	TELEMETRY ENCLOSURE	PRESSURE TRANSMITTER (UPSTREAM)	BELOW GRADE (RGS) ABOVE GRADE (LIQUIDTIGHT)	
(3)	(2) – 1"	1"C (2) – 1PR #18 SH 1"C (2) #14	TELEMETRY ENCLOSURE	XX" PRV (MAIN)	BELOW GRADE (RGS) ABOVE GRADE (LIQUIDTIGHT)	DIFFERENTAL PRESSURE AND POSITION SIGNALS, (2) – 1PR #18 SH PRV ENABLE/DISABLE, (2) – #14
(4)	(2) – 1"	1"C (2) – 1PR #18 SH 1"C (2) #14	TELEMETRY ENCLOSURE	XX" PRV (BYPASS)	BELOW GRADE (RGS) ABOVE GRADE (LIQUIDTIGHT)	DIFFERENTAL PRESSURE AND POSITION SIGNALS, (2) – 1PR #18 SH PRV ENABLE/DISABLE, (2) – #14
(5)	1"	(1) – 1PR #18 SH	TELEMETRY ENCLOSURE	PRESSURE TRANSMITTER (DOWNSTREAM)	BELOW GRADE (RGS) ABOVE GRADE (LIQUIDTIGHT)	
(6)	(2) – 1"	PULL CORD	TELEMETRY ENCLOSURE	PRV ENCLOSURE	BELOW GRADE (RGS) ABOVE GRADE (LIQUIDTIGHT)	SPARES W/PULL CORDS
(7)	3"	(3) #2/0	ELECTRIC SERVICE PEDESTAL	POWER CONNECTION	UNDERGROUND	PER POWER COMPANY REQUIREMENTS
(8)	(2) – 2"	PULL CORD	TELEMETRY ENCLOSURE	TELEPHONE CONNECTION	UNDERGROUND	PER TELEPHONE COMPANY REQUIREMENTS
(9)	(2) – 1"	1"C – (2) #12 (3) #10 1"C PULL CORD	ELECTRICAL SERVICE PEDESTAL	RTU	BELOW GRADE (RGS) ABOVE GRADE (LIQUIDTIGHT)	RTU/FLOW COMPUTER POWER (2) #12, (2) #10, (1) #10G FOR RTU RECEPTACLE SPARE W/PULL CORD
(10)	2"	(1) – 1/2" HELIAX (2) – #14 (2) – #12	TELEMETRY ENCLOSURE	ANTENNA POLE	UNDERGROUND	(2) – #12 FOR SOLAR PANELS (2) – #14 FOR SOLAR PANELS THEFT PROTECTION

PRV/FLOW STATION CONDUIT LAYOUT DIAGRAM

NOT TO SCALE

IT01–5 111506

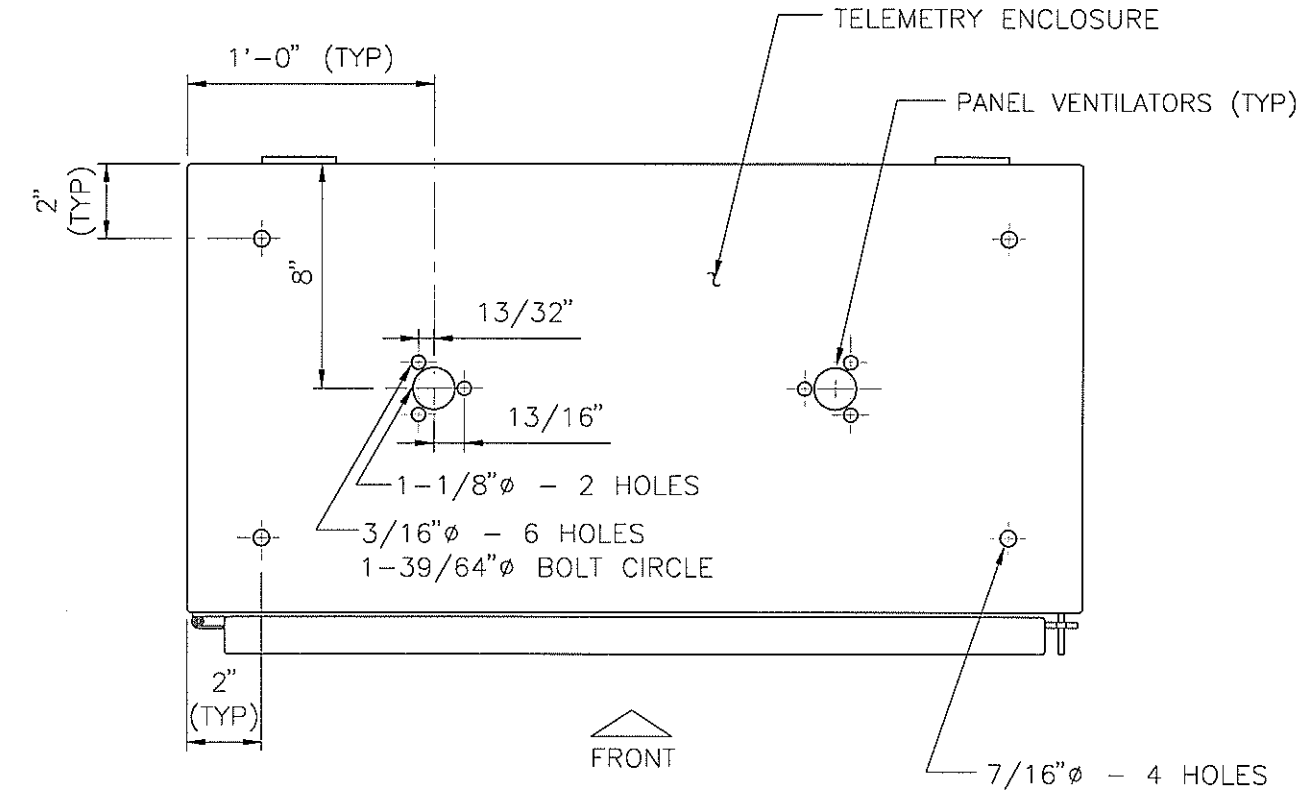

TOP VIEW

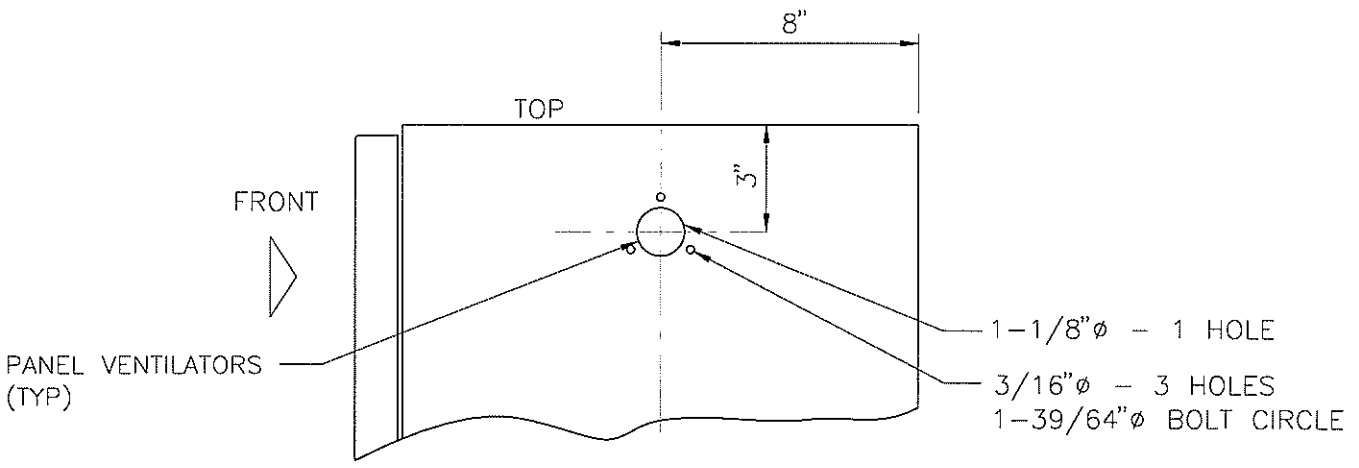

SIDE VIEW

(TYP) BOTH SIDES

PRV/FLOW STATION ENCLOSURE BOLT HOLE ALIGNMENTS (TOP AND SIDE)

NOT TO SCALE IT02-1 111506

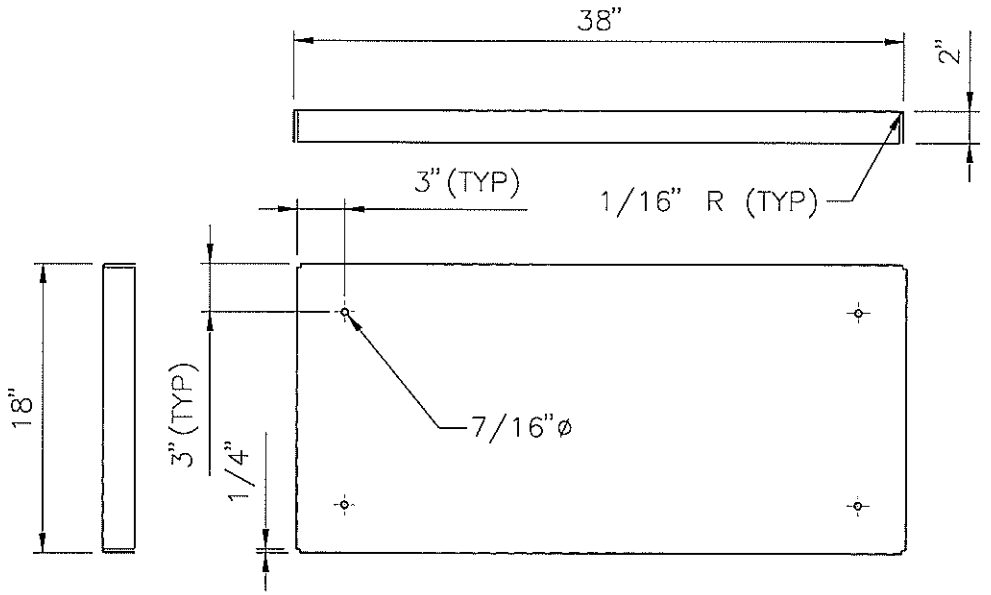

NOTES:

1. MATERIAL: 16 GA. ELECTROPLATED COLD-ROLLED STEEL SHEET.
2. ALL SHARP EDGES SHALL BE DEBURRED.
3. FINISH: POLYESTER URETHANE (POWDER COAT) WHITE APPLIED BY THE SUNSHIELD MANUFACTURER.

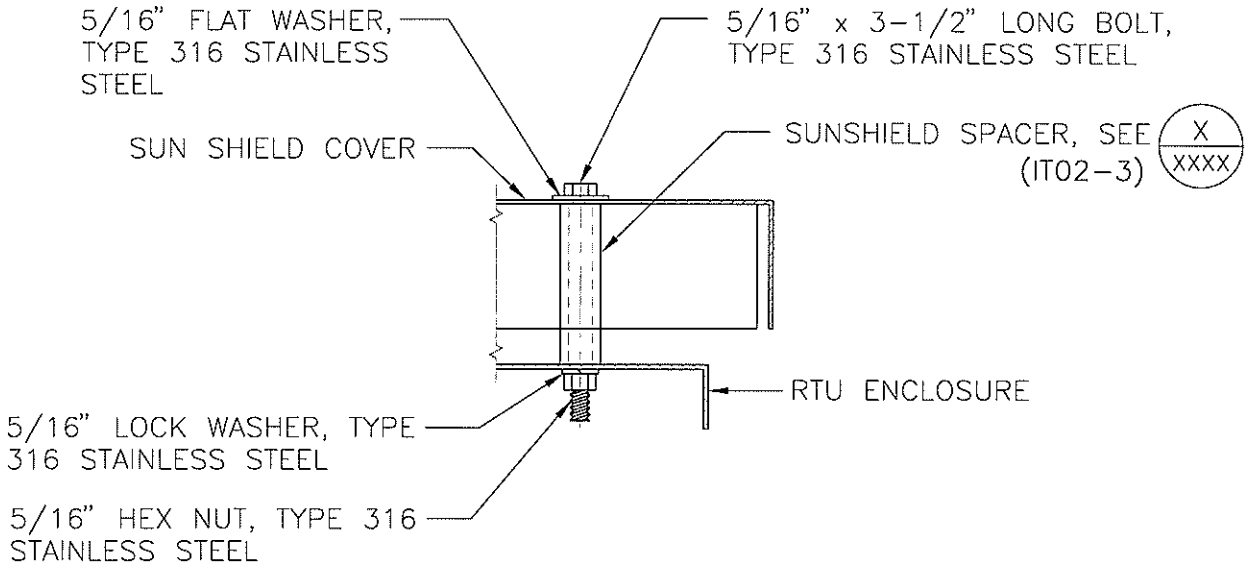

PRV/FLOW STATION ENCLOSURE SUNSHIELD

NOT TO SCALE

IT02-2 111506

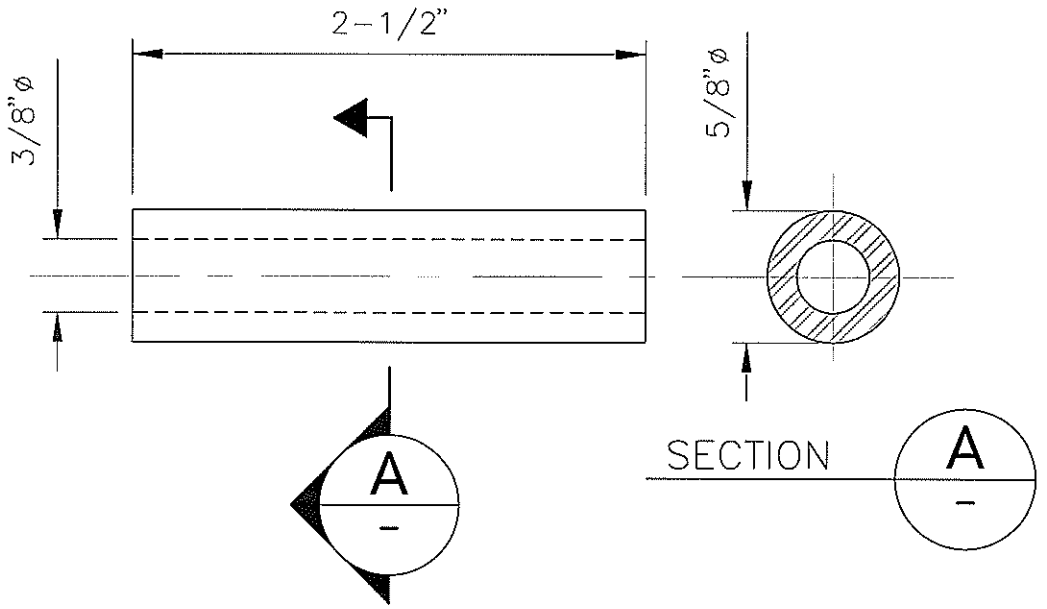

ENCLOSURE SUNSHIELD MOUNTING SPACERS

NOT TO SCALE IT02-3 111506

GENERAL FABRICATION NOTES:

1. ALL STEEL SHAPES, PLATES AND BARS USED FOR THESE FABRICATIONS SHALL CONFORM TO THE "SPECIFICATION FOR STRUCTURAL STEEL" ASTM A-36 OR THE "SPECIFICATIONS FOR COLD-FORMED WELDED AND SEAMLESS CARBON STEEL STRUCTURAL TUBING IN ROUNDS AND SHAPES" ASTM A-501.

2. ALL WELDING SHALL BE BY THE SHIELDED ARC METHOD AND SHALL CONFORM TO THE AWS D1.1 "STRUCTURAL WELDING CODE".

3. ALL STEEL SHAPES, PLATES, BARS AND FABRICATED ASSEMBLIES SHALL BE GALVANIZED IN ACCORDANCE WITH THE "SPECIFICATION FOR ZINC (HOT-GALVANIZED) COATINGS ON PRODUCTS FABRICATED FROM ROLLED, PRESSED AND FORGED STEEL SHAPES, PLATES BARS AND STRIP" ASTM A-123, OR BY THE APPLICATION OF AN ORGANIC ZINC RICH COATING. THE ORGANIC ZINC RICH COATINGS SHALL BE "GALVANOX", "GALVOWELD", OR APPROVED EQUAL.

4. ALL BURRS SHALL BE REMOVED FROM CUT OR DRILLED STEEL SHAPES, TUBES, PLATES AND BARS.

5. ALL BOLT HOLES SHALL BE DRILLED, NOT FLAME CUT, THROUGH ALL STEEL FABRICATED PLATES. HOLES IN MATING PLATES SHALL BE MATCH DRILLED.

6. ALL THREADED NUTS AND BOLTS SHALL CONFORM TO ASTM A-307, GRADE "B" AND SHALL BE ZINC PLATED IN ACCORDANCE WITH ASTM B-633.

7. FINISH ENTIRE ASSEMBLY W/POLYESTER POWDER COAT WHITE.

8. ALL SUNSHIELD SPACERS SHALL BE ALUMINUM TUBING (6061 OR SIMILAR).

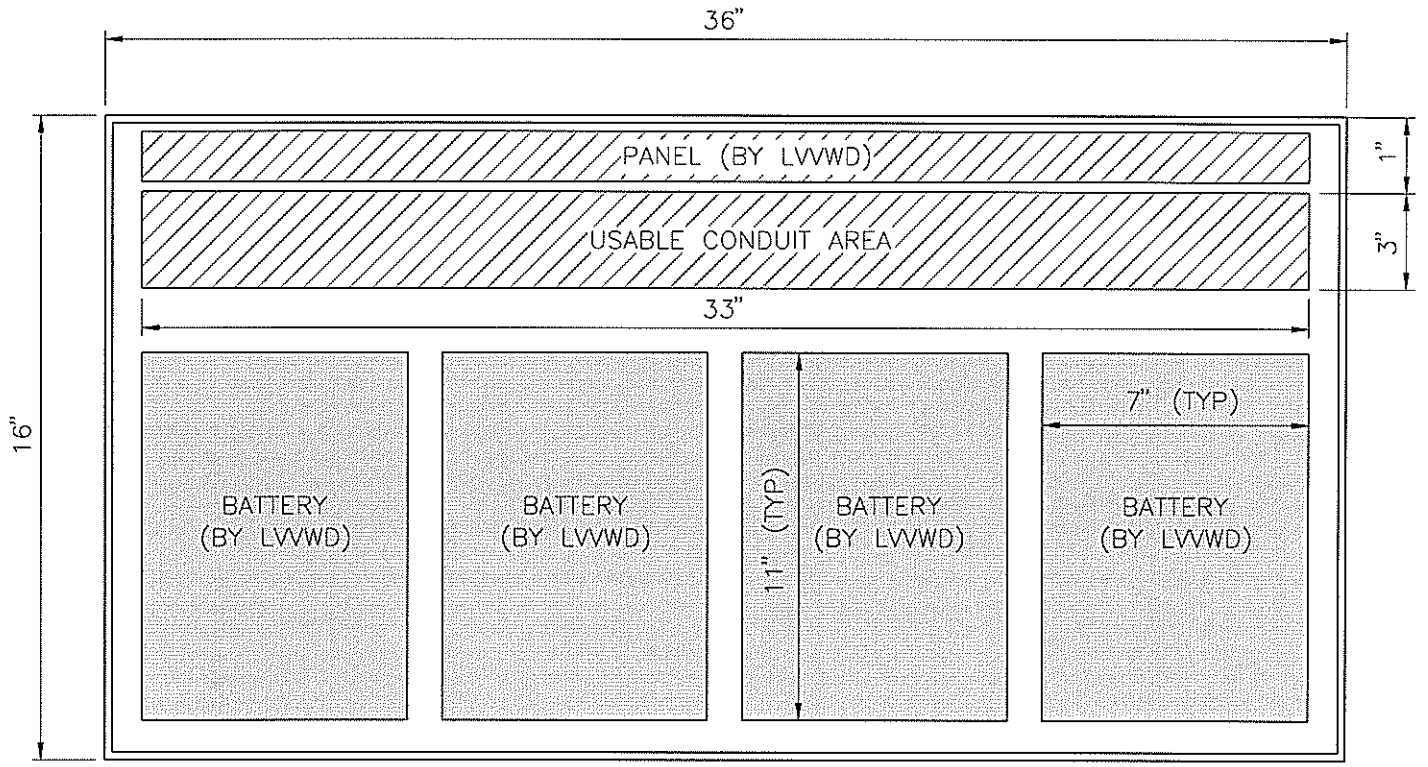

BOTTOM VIEW

NOTE:
LVVWD WILL PROVIDE BATTERIES AND INSTALL VENTILATION FAN.

PRV/FLOW STATION ENCLOSURE CONDUIT AND BATTERY LAYOUT (SOLAR)

NOT TO SCALE

IT02-5 111506

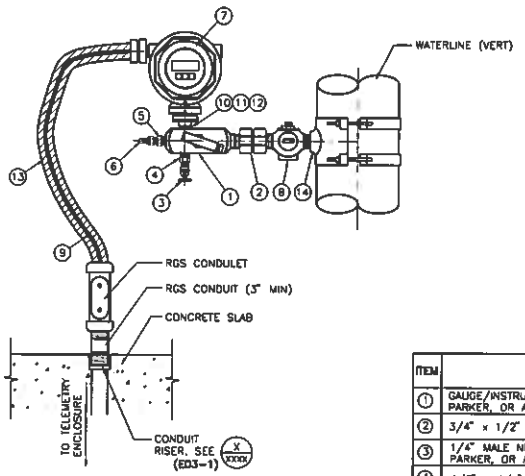

FLOOR MOUNT (ABOVE GRADE)

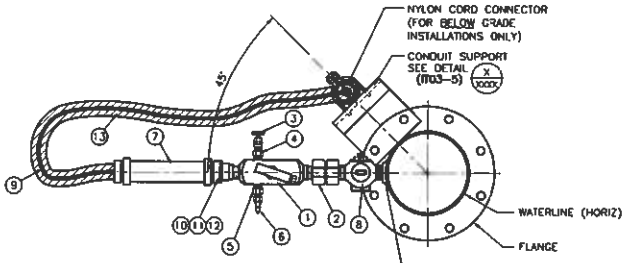

FLANGE MOUNT

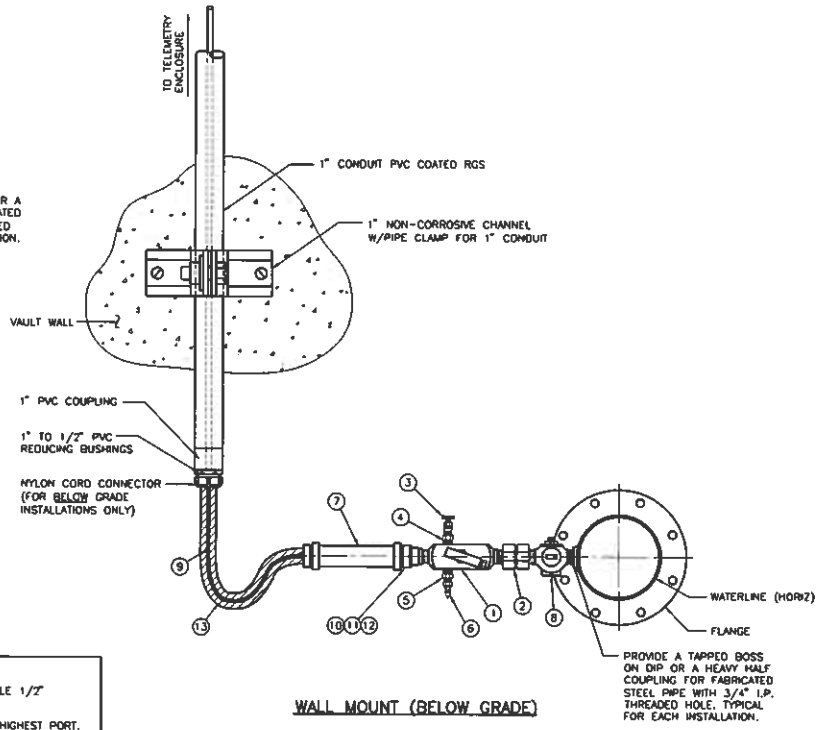

WALL MOUNT (BELOW GRADE)

ITEM	DESCRIPTION
①	GAUGE/INSTRUMENTATION VALVE, ANDERSON GREENWOOD, PARKER, OR APPROVED EQUAL
②	3/4" x 1/2" HEX REDUCING COUPLING
③	1/4" MALE NPT BLEED VALVE, ANDERSON GREENWOOD, PARKER, OR APPROVED EQUAL (SEE NOTE 2)
④	1/2" x 1/4" HEX REDUCING BUSHING
⑤	1/2" x 1/4" HEX REDUCING NIPPLE
⑥	MALE QUICK DISCONNECT (PARKER SH2-63)
⑦	BELOW GRADE INSTALLATIONS: APPROVED SUBMERSIBLE DIRECT PRESSURE SENSING PRESSURE TRANSMITTER, 150 PSIG ABOVE GRADE INSTALLATIONS: APPROVED DIRECT PRESSURE SENSING PRESSURE TRANSMITTER, 150 PSIG NOTE: SPACE CONSTRAINTS MAY DICTATE WHICH ASSEMBLY TO UTILIZE.
⑧	3/4" CORPORATION STOP, IRON PIPE THD.
⑨	TRANSMITTER CABLE
⑩	STAINLESS STEEL UNION SWAGELOCK, PARKER, OR APPROVED EQUAL
⑪	STAINLESS STEEL REDUCING BUSHING
⑫	STAINLESS STEEL NIPPLE
⑬	LIQUIDTIGHT METAL FLEXIBLE CONDUIT (SEE NOTE 7)
⑭	3/4" BRASS SERVICE SADDLE
–	1/2" TEFLON TAPE

NOTES:

1. THE GAUGE/INSTRUMENTATION VALVE HAS 3 FEMALE 1/2" NPT PORTS.
2. THE BLEED VALVE SHOULD BE MOUNTED IN THE HIGHEST PORT.
3. ALL PARTS AND FITTINGS, EXCEPT CORPORATION STOP SHALL BE 316 SSTL.
4. THE CABLE FROM THE PRESSURE TRANSMITTER SHALL BE CONTINUOUS TO THE MOUNTED INSTRUMENT INSIDE THE TELEMETRY CABINET. SPLICES ARE NOT ACCEPTABLE.
5. EACH PRESSURE TRANSMITTER SHALL BE SUPPLIED WITH THE REQUIRED CABLE LENGTH PLUS AN ADDITIONAL FIVE FEET TO PROVIDE FLEXIBILITY IN INSTALLATION. THE LENGTH REQUIRED FOR EACH CABLE SHALL BE DETERMINED IN THE FIELD TO ALLOW FOR VARIOUS SITE CONDITIONS AFFECTING THE FINAL TIE-IN. EACH PRESSURE TRANSMITTER CABLE LENGTH SHALL BE VERIFIED BY THE CONTRACTOR BEFORE PURCHASING THE UNIT.
6. REFER TO SPECIFICATIONS FOR CONDUIT MATERIAL AND INSTALLATION REQUIREMENTS.
7. LIQUIDTIGHT METAL FLEXIBLE CONDUIT ONLY REQUIRED ON ABOVE GRADE INSTALLATIONS.

DESIGNER NOTES:
ELIMINATE MOUNT DETAILS NOT APPLICABLE TO PROJECT AS REQUIRED.

REVISE PRESSURE TRANSMITTER ASSEMBLY AS APPLICABLE TO PROJECT (ABOVE OR BELOW GRADE)

PRESSURE TRANSMITTER ASSEMBLY AND CONNECTION DETAIL

NOT TO SCALE

M03-1 102907

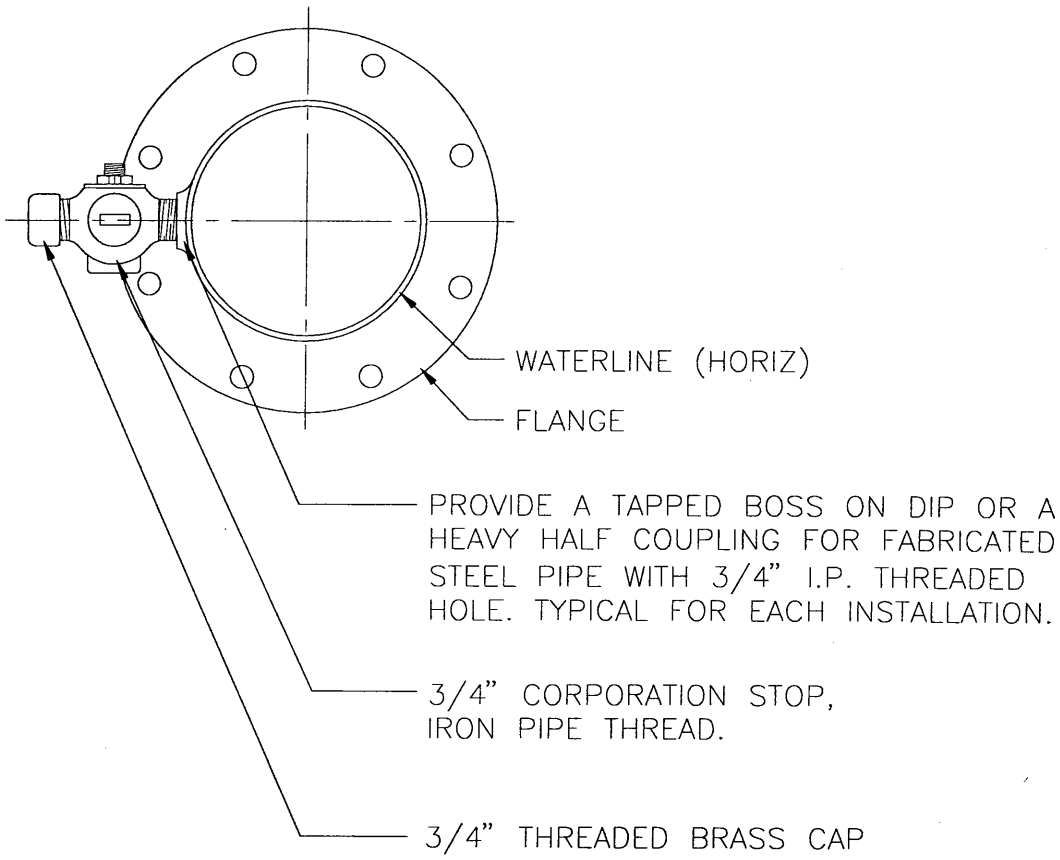

FUTURE PRESSURE TRANSMITTER ASSEMBLY OUTLET

NOT TO SCALE IT03-2 050704

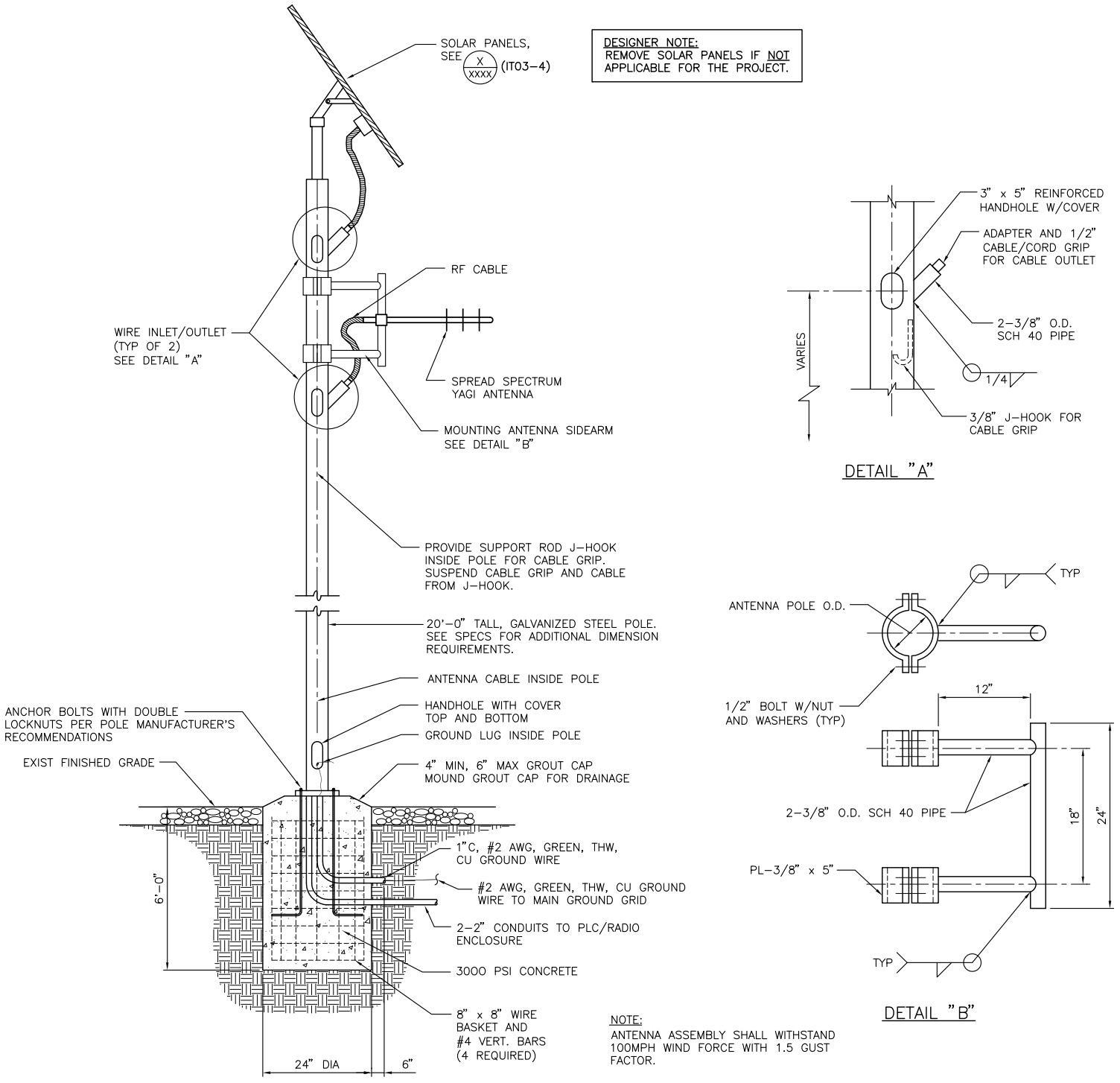

NOTE:
ANTENNA ASSEMBLY SHALL WITHSTAND 100MPH WIND FORCE WITH 1.5 GUST FACTOR.

ANTENNA DETAIL

NOT TO SCALE IT03-3 062310

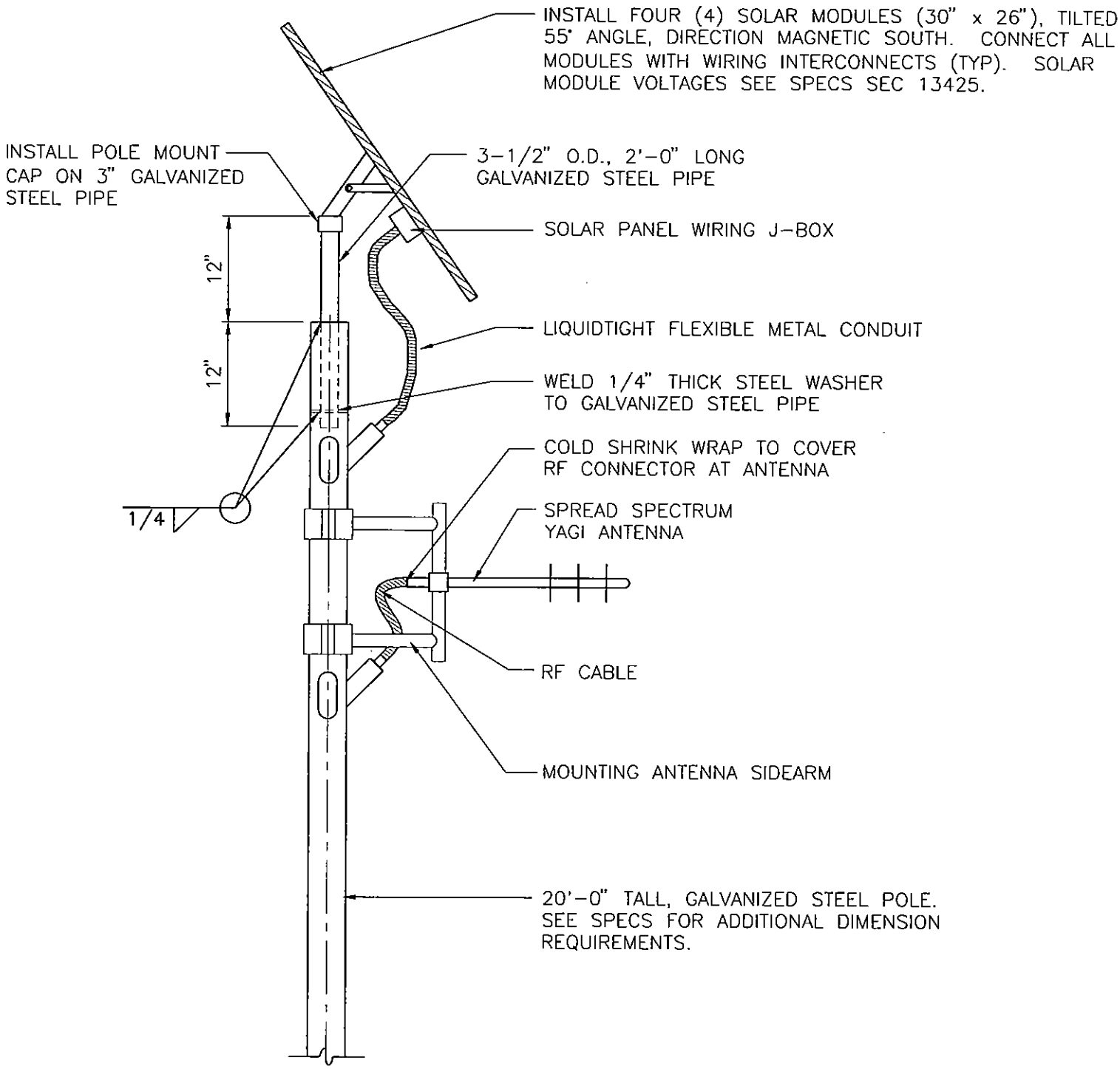

SOLAR PANEL INSTALLATION DETAIL

NOT TO SCALE IT03-4 072303

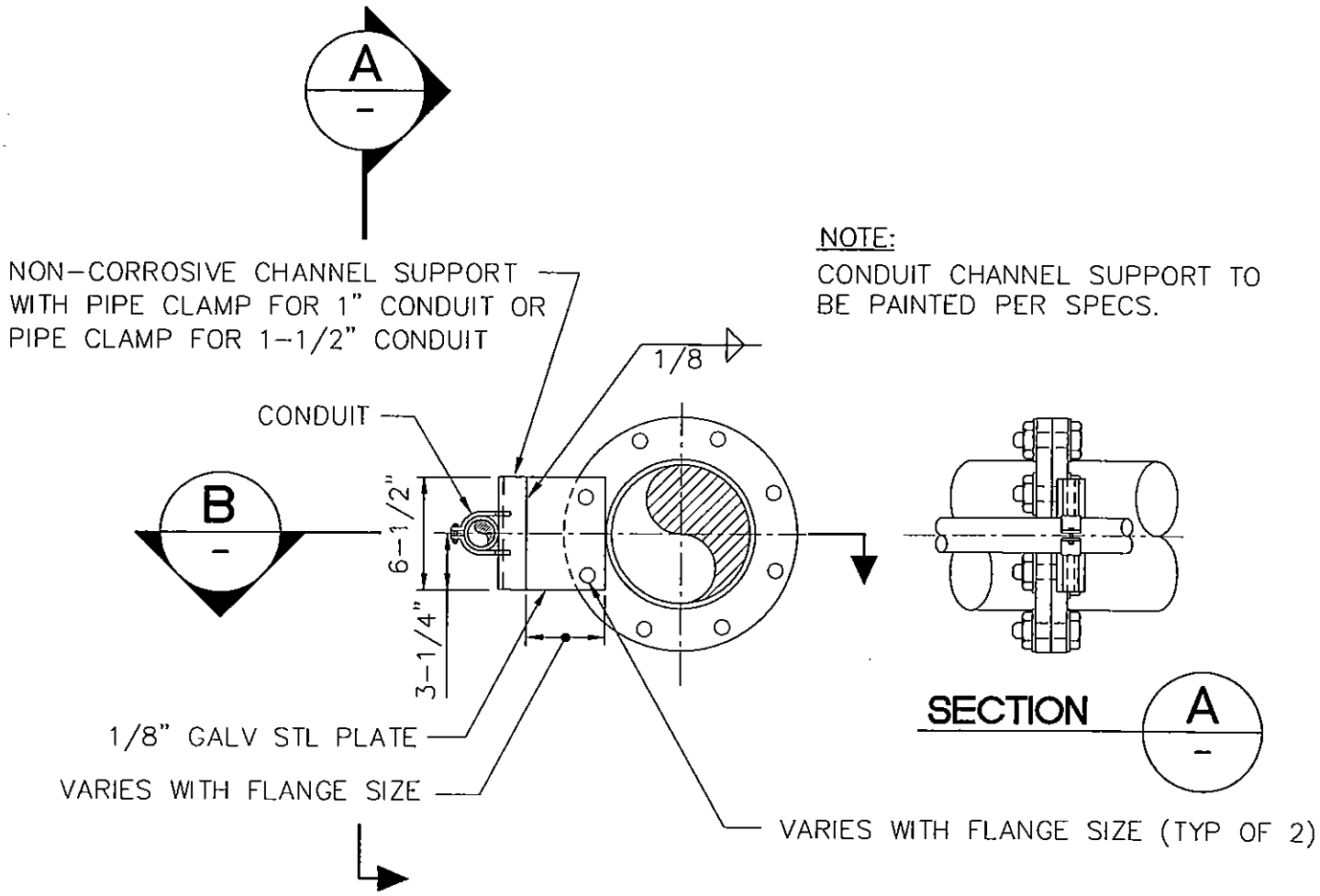

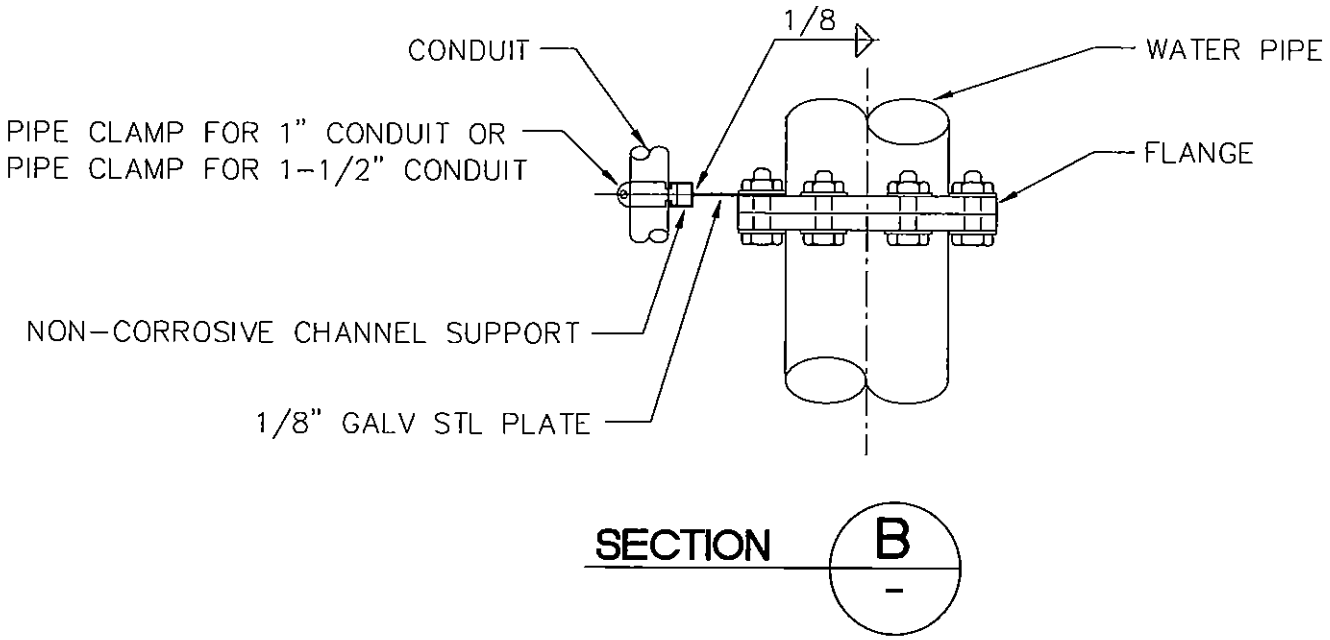

CONDUIT SUPPORT DETAIL

NOT TO SCALE IT03-5 063003

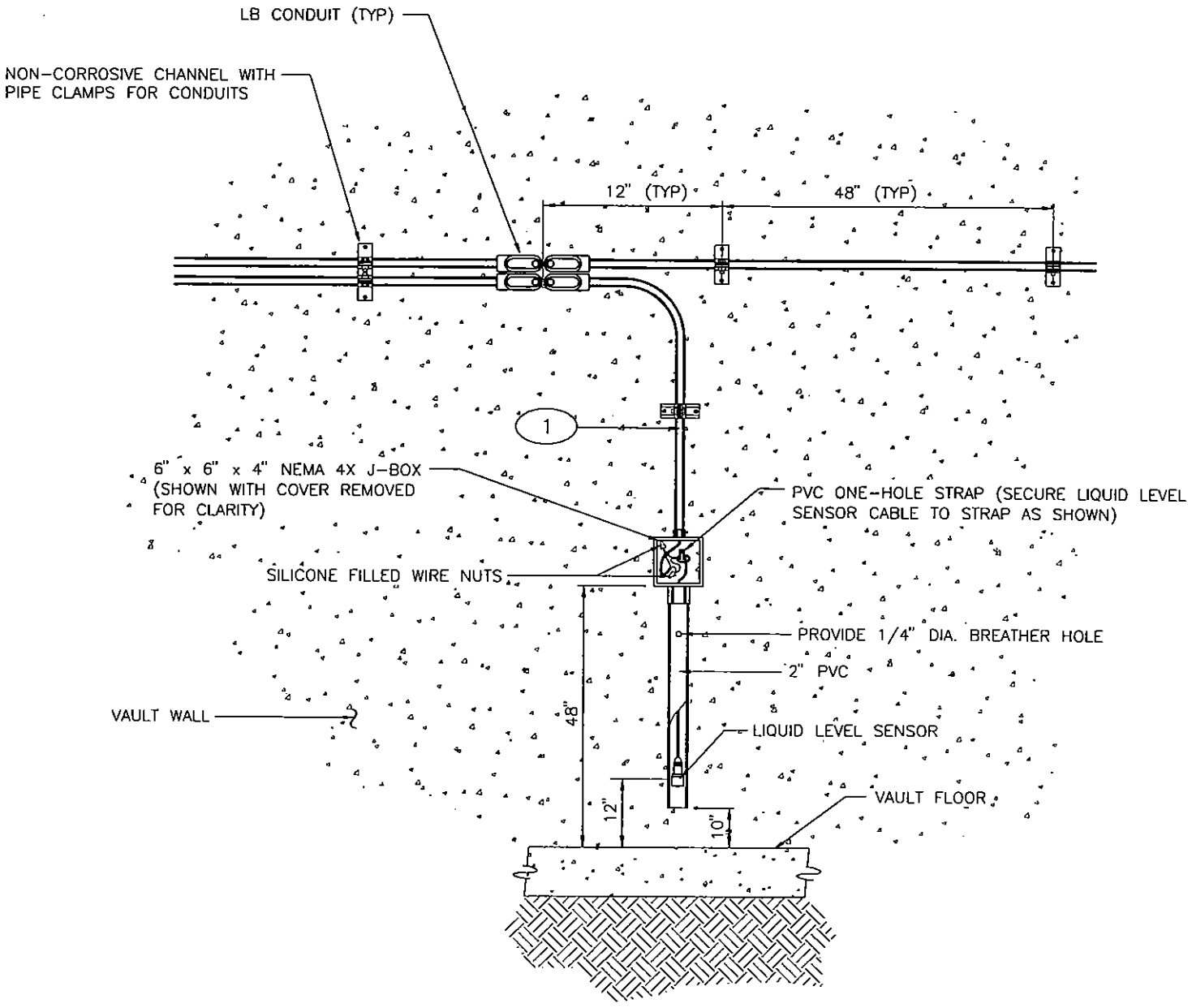

CONDUIT, WIRE, & CABLE SCHEDULE					
ITEM NO.	CONDUIT SIZE	CONDUCTORS	FROM	TO	ROUTE
(1)	1"	2 #14	TELEMETRY ENCLOSURE	LEVEL SWITCH	UNDERGROUND

ALL CONDUITS AND FITTINGS WITHIN VAULT TO BE SCH 40 PVC (TYP)

LEVEL SWITCH DETAIL

NOT TO SCALE IT03-6 063003

EACH RUN OF CONDUIT WILL BE UTILIZED AS FOLLOWS:	
(1)	AC POWER TO RTU.
(2)	CONTACTS FROM MCC (AS REQUIRED)
(3)	ANALOG SIGNAL RUNS FROM DISCHARGE & SUCTION HEADER(S).
(4)	DRAWDOWN ANALOG SIGNAL RUN.
(5)	POWER OR CONTROL
(6)	CONTROL CONDUCTORS CARRYING AC POWER.
(7)	HELIAX HARD LINE FROM ANTENNA.
(8)	ANALOG & DI RUNS FROM CL2 BUILDING.
(9)	POWER OR CONTROL
(10)	ANALOG AND D/I SIGNAL RUNS.
	SPARE
(12)	ANALOG AND D/I SIGNAL RUNS.
(13)	TELCO ENTRY CABLE.
(14)	ANALOG AND D/I SIGNAL RUNS.
(15)	ANALOG AND D/I SIGNAL RUNS.

* PAD TO MATCH ENCLOSURE MANUFACTURERS REQUIREMENTS.

DESIGNER NOTE:
SIZE CONDUIT PER SPECIFIC PROJECT REQUIREMENTS.

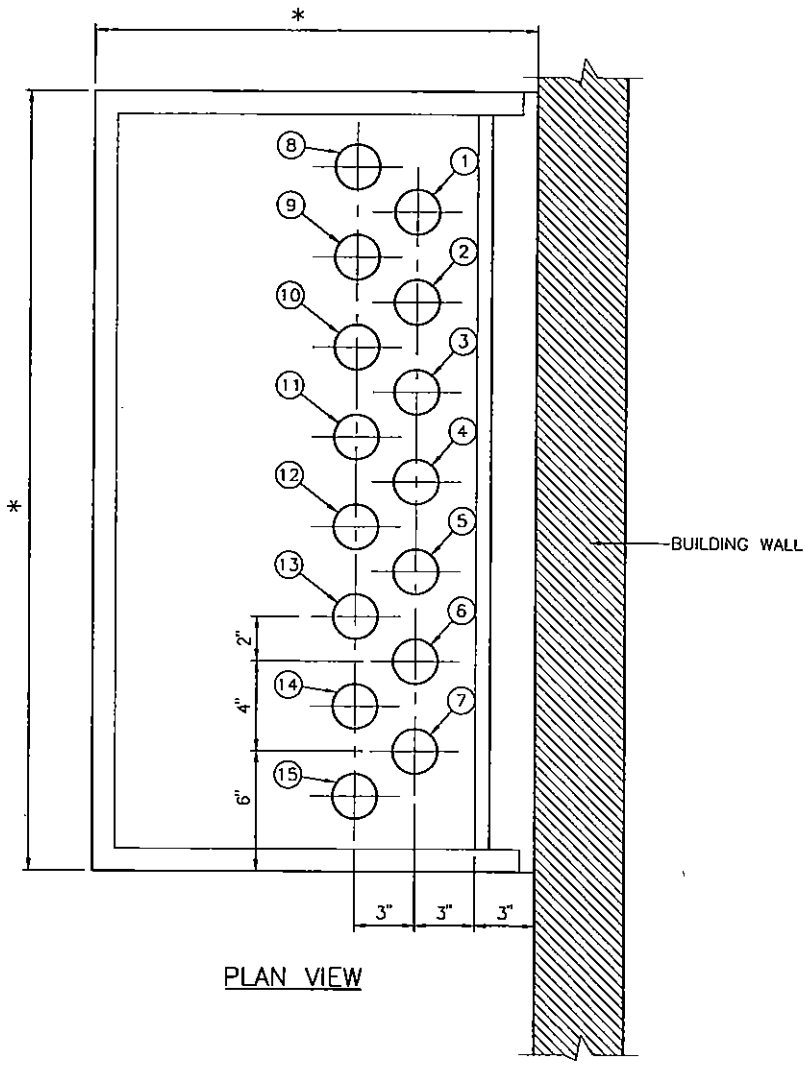

PLAN VIEW

PUMP STATION "RTU" ENCLOSURE CONDUIT LAYOUT

NOT TO SCALE

IT03-7 063003

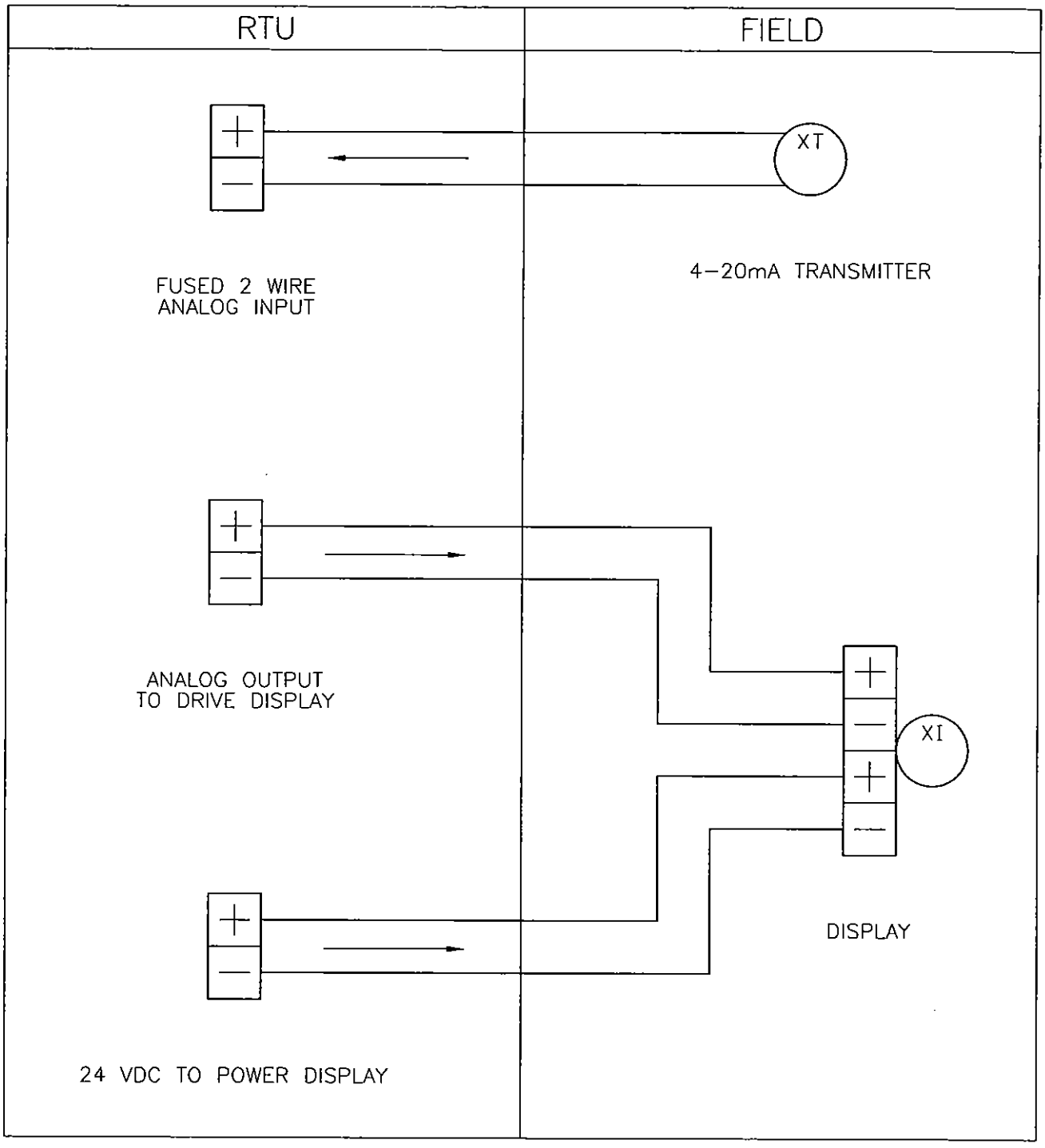

TYPICAL 4-20mA TRANSMITTER AND REMOTE DISPLAY

NOT TO SCALE

IT03-8 063003

PRIMARY ELEMENT SYMBOLS

- ORIFICE PLATE
- SONIC OR ULTRASONIC FLOWMETER
- MAGNETIC FLOWMETER
- FLUME
- WEIR
- PROPELLER OR TURBINE METER
- VENTURI TUBE
- FLOW NOZZLE
- INSERTION FLOWMETER
- ULTRASONIC LEVEL ELEMENT

CROSS REFERENCE SYMBOLS

- DWG NO IT6 — CONTINUATION ON DRAWING NO IT6
- DWG NO IT8 — CONTINUED FROM DRAWING NO IT8

VALVE SYMBOLS

- GATE VALVE
- SWING CHECK VALVE
- GLOBE VALVE
- BUTTERFLY VALVE
- BALL VALVE
- PLUG VALVE
- MOTOR OPERATED VALVE
- SOLENOID VALVE – 2 WAY
- SOLENOID VALVE – 3 WAY
- PRESSURE REGULATING VALVE SELF-CONTAINED (CLOSED)
- PRESSURE REGULATING VALVE SELF-CONTAINED (OPEN)
- CYLINDER OPERATED VALVE PNEUMATIC/HYDRAULIC
- PRESSURE RELIEF VALVE
- OPEN ANGLE VALVE
- DIAPHRAGM OR PINCH VALVE
- AIR RELEASE VACUUM VALVE
- STRAINER
- DIAPHRAGM SEAL
- BACKFLOW PREVENTER
- BACKPRESSURE REGULATOR

LINE TYPES

- MAIN PROCESS LINE
- SECONDARY PROCESS LINE
- PROCESS CONNECTION
- DIRECTION OF FLOW
- PNEUMATIC SIGNAL
- ELECTRICAL SIGNAL
- HYDRAULIC SIGNAL
- SOFTWARE OR DATA LINK
- CROSSOVER – NO CONNECTION
- CAPILLARY LINE

INST. AND FUNCTION SYMBOLS

- PRIMARY DEVICE/ELEMENT, FIELD MOUNTED
- DEVICE/ELEMENT PANEL MOUNTED, ACCESSIBLE TO OPERATOR
- DEVICE/ELEMENT INSIDE PANEL, NORMALLY INACCESSIBLE
- INDICATING LIGHT
- PROGRAMMABLE LOGIC CONTROL, INPUT/OUTPUT
- HUMAN MACHINE INTERFACE DISPLAY CONTROL FUNCTION
- REMOTE TERMINAL UNIT INPUT/OUTPUT
- SCADA SYSTEM DISPLAY CONTROL FUNCTION
- DEVICE WITH ADDITIONAL CONTROL/PROCESSING FUNCTIONS AS DESCRIBED BELOW:

  F/A — A=ANALOG, B=BINARY, D=DIGITAL, E=VOLTAGE, F=FREQUENCY, H=HYDRAULIC, I=CURRENT, O=SONIC, ELECTROMAGNETIC, P=PNEUMATIC, R=RESISTANCE (ELEC)

- DIGITAL INPUT
- DIGITAL OUTPUT
- ANALOG INPUT
- ANALOG OUTPUT
- XXX I — COMPLEX INTERLOCK AS DEFINED IN THE SPECIFICATIONS (SUBSCRIPT INDICATES PANEL)
- F — COMPLEX INTERLOCK AS DEFINED IN THE OPERATIONAL GUIDANCE DOCUMENTS

NOTES

1. COVERS ALL ANALYSIS NOT LISTED IN TABLE. TYPE OF ANALYSIS WILL BE DEFINED OUTSIDE TAGGING BALLOON ON DIAGRAM.
2. INTENDED TO COVER UNLISTED MEANINGS THAT WILL BE USED TO A LIMITED EXTENT. MEANINGS WILL BE DEFINED OUTSIDE OF TAGGING BALLOON ON DIAGRAM.
3. FUNCTION OF COMPUTING DEVICE WILL BE DEFINED OUTSIDE TAGGING BALLOON. SEE ABBREVIATIONS FOR DESIGNATION.
4. USERS CHOICE.
5. THE INSTRUMENT LOOP NUMBERS SHALL BE PRECEDED BY THE ZONE AND SITE PREFIXES.

PREFIX	LOCATION
2420PUMP STATION NAME	PUMP STATION NAME
2420RESERVOIR NAME	RESERVOIR NAME

6. THE CONTRACTOR SHALL UTILIZE THE DISTRICT'S INSTRUMENT TAG NUMBERING CRITERIA FOR ALL INSTRUMENTATION AND ELECTRICAL COMPONENTS INCLUDING: (SEE SCHEDULE A, SECTION 16075)
   - A. WIRING (WIRE LABELS, TERMINALS, WIRE LISTS, ETC)
   - B. FLOW INSTRUMENTATION
   - C. FIELD DISPLAYS
   - D. SOLENOID VALVES
   - E. LEVEL SWITCHES
   - F. CONTINUOUS LEVEL INSTRUMENTATION
   - G. SECURITY TAGGING
   - H. DATA TAGGING
7. FIELD INSTRUMENT IDENTIFICATION LETTERS ARE TO BE CONSISTENT WITH ISA.

EQUIPMENT/DEVICE SYMBOLS

- CENTRIFUGAL PUMP
- SUBMERSIBLE PUMP
- CENTRIFUGAL BLOWER
- CHEMICAL FEED PUMP
- POSITIVE DISPLACEMENT PUMP
- VERTICAL TURBINE PUMP
- MIXER – PROPELLER TYPE
- TANK – AS DEFINED
- PROCESS OR EQUIPMENT CONTROL PANEL/ENCLOSURE
- SUBMERGED PRESSURE SENSING LEVEL TRANSMITTER

ACTUATOR SYMBOLS

- OPERATOR ABBREVIATIONS: M = MOTOR, P = PNEUMATIC, S = SOLENOID
- FLOAT OPERATOR
- SPRING OPPOSED SINGLE ACTING PNEUMATIC CYLINDER
- DOUBLE ACTING PNEUMATIC CYLINDER
- PNEUMATIC DIAPHRAGM
- PNEUMATIC DIAPHRAGM WITH POSITIONER
- MANUAL VALVE

LOCAL SWITCH NOTATION ABBREVIATIONS

XYZ

HA	HAND–AUTO
HOA	HAND–OFF–AUTO
LOR	LOCAL–OFF–REMOTE
RSL	RAISE–STOP–LOWER
OCA	OPEN–CLOSE–AUTO
AM	AUTOMATIC–MANUAL
LS	LOCKOUT STOP
OA	OFF–AUTO
OC	OPEN/CLOSE
OO	ON–OFF
OSC	OPEN–STOP–CLOSE
SS	START–STOP (PUSHBUTTONS)
SD	SHUTDOWN
SEL	SELECT

EXAMPLE – SCADA TAG IDENTIFICATION

SCADA TAG: 2420NAME_FIT710

- 2420 — PREFIX (NOTE 5)
- NAME — LOCATION
- F — FIRST LETTER
- IT — SUCCEEDING LETTERS
- 710 — LOOP NUMBER (NOTE 6)

SCADA INSTRUMENT IDENTIFICATION LETTERS (SEE NOTE 7)

Alpha	FIRST LETTER	SECOND LETTER		THIRD LETTER
	FUNCTION	INPUT FUNCTION	OUTPUT FUNCTION	MODIFIER
A	ANALYZER	ALARM/HI ALARM		A – PHASE
B			CLOSE, STOP, DECREASE	B – PHASE
C	COMMUNICATION	CONTROL	CONTROL	C – PHASE
D		DIFFERENTIAL	OPEN, START, INCREASE	DRAWDOWN
E	VOLTAGE	SENSOR (PRIMARY ELEMENT)		
F	FLOW	FAIL		
G				
H	HAND	HI–HI ALARM		
I	CURRENT (ELEC)	INDICATE		INLET, SUCTION
J	POWER			
K	TIME		CONTROL STATION	
L	LEVEL	LOW ALARM	LIGHT	
M	MOTOR			
N	INTRUSION	RUN, ON, OPERATING		
O		LOW–LOW ALARM		OUTLET, DISCHARGE
P	PRESSURE			PLC
Q	QUANTITY	TOTALIZE, INTEGRATE		
R				RTU
S	SPEED	STATUS, SWITCH		
T	TEMPERATURE		TRANSMIT	
U				UN–NEEDED/OBSOLETE
V	VIBRATION			
W	WEIGHT			
X	TEST	MULTIFUNCTION		UNCLASSIFIED FIELD DEVICE
Y	EVENT, STATE	RELAY, COMPUTE, CONVERT		
Z	POSITION			SCADA COMPUTER

IT04–1 041907

DISTRICT STANDARD LOOP NUMBERING CONVENTION

LOOP NUM	MAJOR PROCESS SYSTEM	LOOP NUM	PROCESS TYPE, LOCATION, UNIT NUMBER
000	MASTER STATION	010	SCADA COMPUTERS, NETWORK
		020	ENVIRONMENT
		030	SPARE
100	RESERVOIRS, TANKS, BASINS	100	SINGLE UNIT
		120	WELL OILER
		130	TRANSDUCER PROBE DRAWDOWN
		140	CAPACITIVE PROBE DRAWDOWN
		150	SURGE TANKS/SUPPRESSORS
		160	INLET SUMP
		170	UNDERDRAIN
		180	OUTLET SUMP
		190	MIXER
200	PUMPS	200	STATION/SINGLE PUMP GROUP
		210	PUMP GROUP 1
		220	PUMP GROUP 2
		230	PUMP GROUP 3
		240	PUMP GROUP 4
		250	PUMP GROUP 5
		260	PUMP GROUP 6
		270	PUMP GROUP 7
		280	PUMP GROUP 8
		290	WELL PUMP
300	FACILITY	300	COMMON
		310	CONTROL BUILDING
		320	DISINFECTION BUILDING
		330	VAULT
		340	FIRE SYSTEM
		350	SPARE
		360	POWER
		370	ENVIRONMENT
		380	AIR SYSTEMS
		390	WEATHER
400	DISINFECTION	400	COMMON
		410	RESIDUAL ANALYZERS
		420	SAMPLE COLLECTION/RETURN
		430	WASHDOWN
		440	SPARE
		450	SODIUM HYPOCHLORITE
		460	CL2 GAS
		470	SPARE
		480	SPARE
		490	SPARE
500	COMMUNICATION	500	GENERAL
		510	RADIO
		520	LAND LINE (TELEPHONE)
		530	SPARE
		540	SPARE
		550	SPARE
		560	SPARE
		570	REPEATER BATTERY
		580	SPARE
		590	SPARE
600	FIELD COMPUTER	600	COMMON
		610	RTU
		620	PLC
		630	DPC 3301 (HOCKEY PUCK)
		640	DPC 3301 (HOCKEY PUCK)
		650	DPC 3301 (HOCKEY PUCK)
		660	DPC 3301 (HOCKEY PUCK)
		670	BATTERY
		680	SPARE
		690	SPARE
700	DISTRIBUTION	700	PRESSURE STATION
		710	PRV STATION
		720	RATE OF FLOW STATION
		730	RECHARGE VALVE
		740	CHECK VALVE
		750	ELECTRIC VALVE (MOV)
		760	ISOLATION VALVE
		770	RELIEF VALVE
		780	SPARE
		790	SPARE

FOR REFERENCE ONLY

* THE FLOW AND POSITION SIGNALS SHALL BE ASSIMILATED BY A FLOW COMPUTER AND THE FLOW COMPUTER WILL GENERATE THE FLOW OUTPUT SIGNAL.

OSC = OPENING SPEED CONTROL
** CSC = CLOSING SPEED CONTROL

** REQUIRED FOR 2" AND 3" VALVES ONLY.

LOOP TAG EXAMPLE

COMPLETE LOOP TAG NUMBERING FOR THIS FACILITY INCLUDES AN EIGHT DIGIT PREFIX AS INDICATED IN THIS EXAMPLE

PIT 713

XXXXVAAA–PIT713

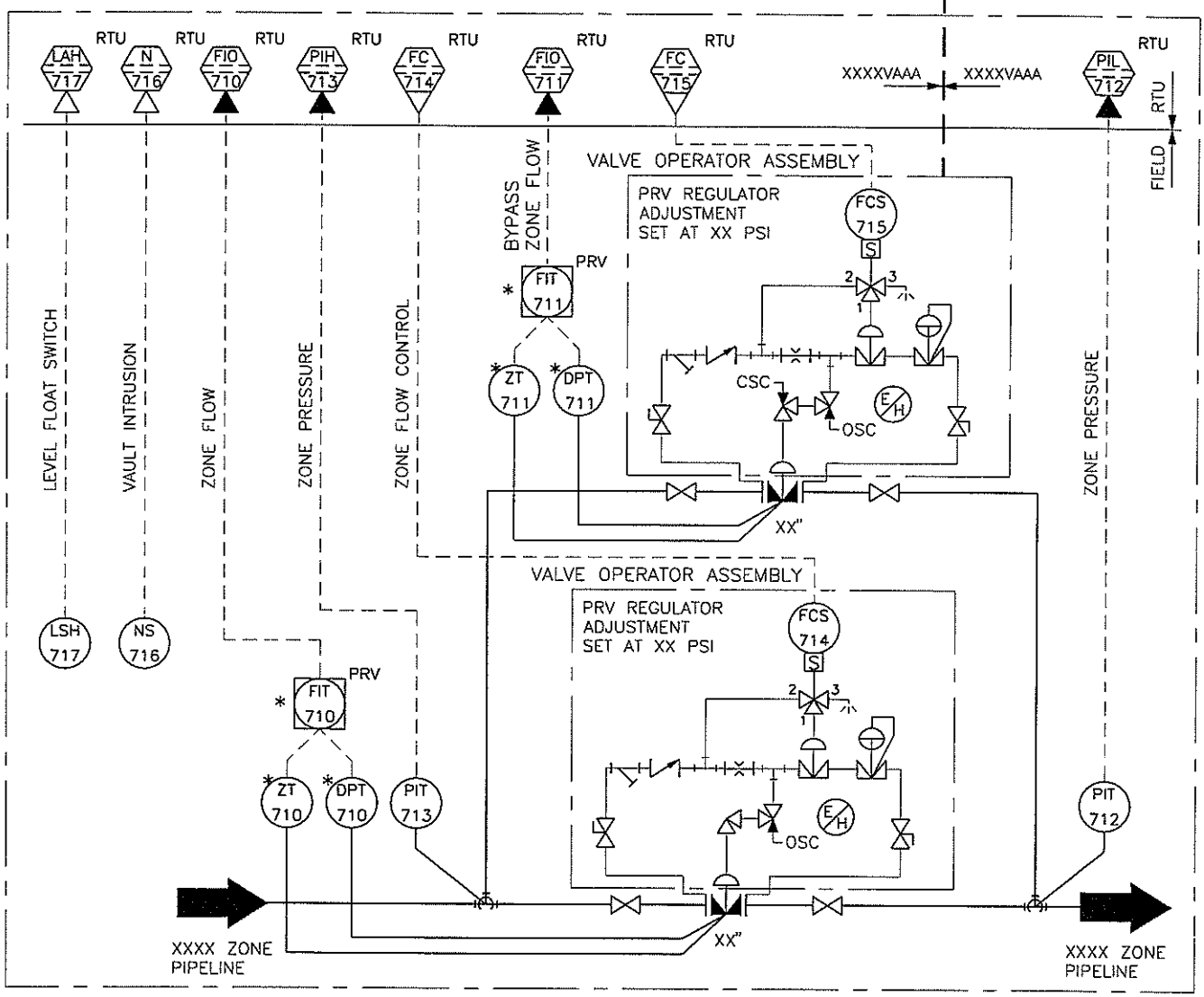

DESIGNER NOTES:

1. PSI SETTING FOR LARGER PRV TO BE 5 PSI LOWER THAN SMALLER PRV.
2. AAA = PRV NUMBER
3. XXXX = PRESSURE ZONE NUMBER
4. ELIMINATE ALL DEVICES NOT REQUIRED AND RENUMBER DEVICES PER PROJECT. FOR LEGEND SEE IT04–1

PRV PROCESS AND INSTRUMENTATION DIAGRAM WITH FLOW METERING

NOT TO SCALE

PRV AND SOLENOID POSITIONING TABLE			
VALVE NO.	PRV NORMAL FUNCTION	SOLENOID STATE * (PORT USAGE SEE TABLE 1)	PILOT DIAGRAM
PRV NO. XXX	OPEN/REGULATING	DE-ENERGIZE TO OPEN PRV	DIAGRAM 1
PRV NO. XXX	OPEN/REGULATING	DE-ENERGIZE TO OPEN PRV	DIAGRAM 1
PRV NO. XXX	OPEN/REGULATING	DE-ENERGIZE TO OPEN PRV	DIAGRAM 1
PRV NO. XXX	CLOSED	DE-ENERGIZE TO CLOSE PRV	DIAGRAM 2
PRV NO. XXX	CLOSED	DE-ENERGIZE TO CLOSE PRV	DIAGRAM 2

* THE SOLENOID NORMAL STATE IS TO BE DE-ENERGIZED (TYP).

TABLE 1	
SOLENOID PORTING	
SOLENOID STATE	PORTS CONNECTED
DE-ENERGIZED	1 TO 3
ENERGIZED	1 TO 2

SOLENOID PILOT SYSTEM
PORT CONNECTIONS FOR
DE-ENERGIZE TO OPEN

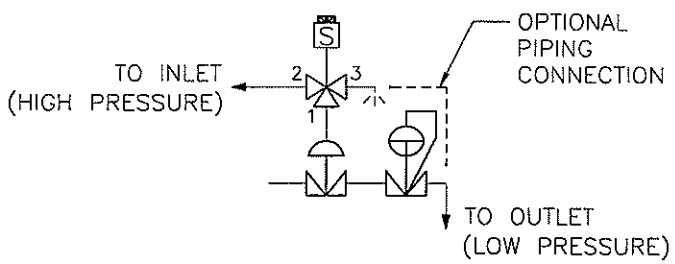

DIAGRAM 1

SOLENOID PILOT SYSTEM
PORT CONNECTIONS FOR
DE-ENERGIZE TO CLOSED

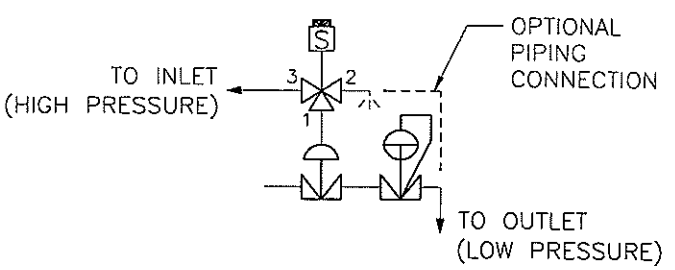

DIAGRAM 2

PRV ENABLE/DISABLE SOLENOID

NOT TO SCALE IT04-2A 080106

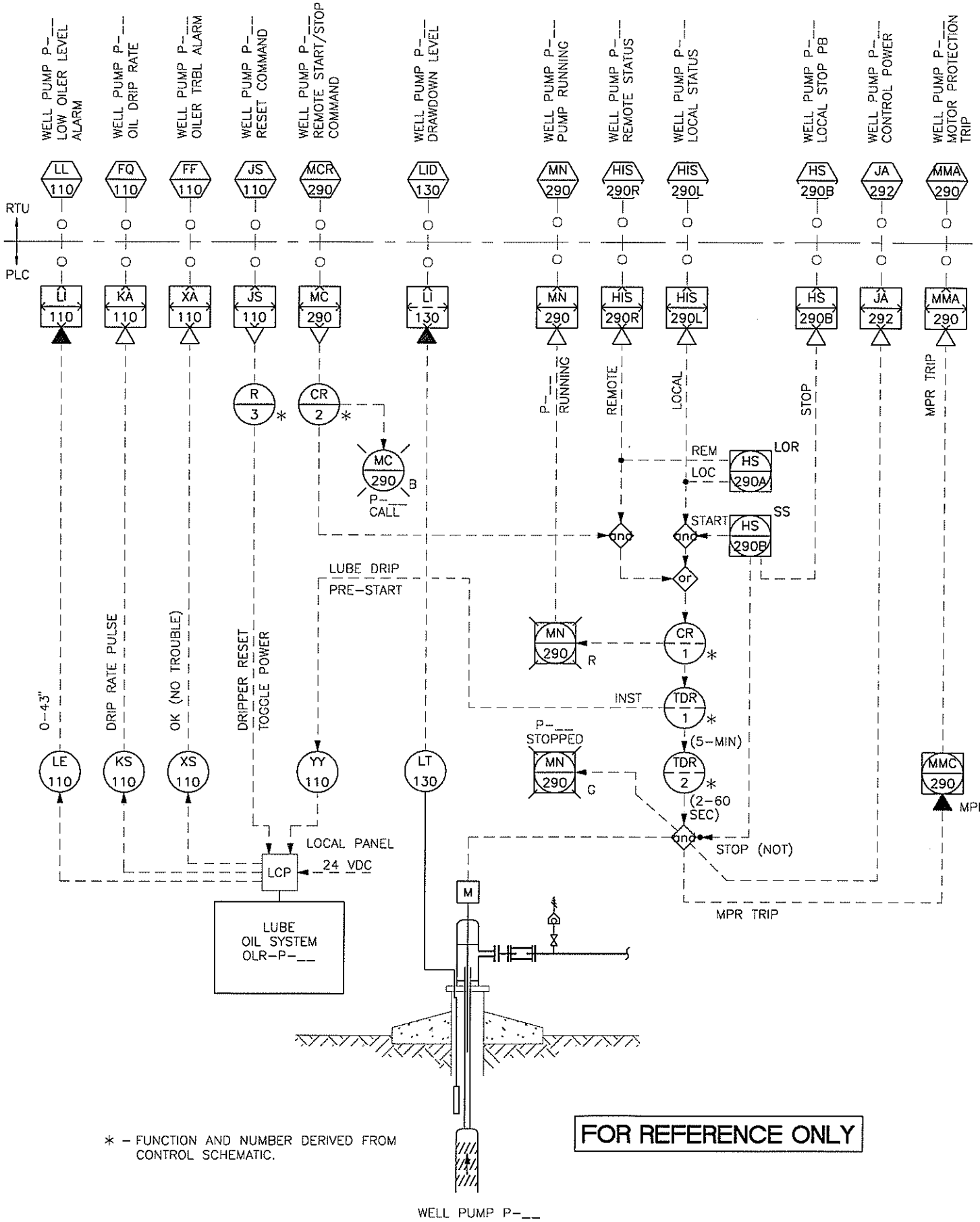

WELL PUMP PROCESS AND INSTRUMENTATION DIAGRAM

NOT TO SCALE

IT04-3 101005

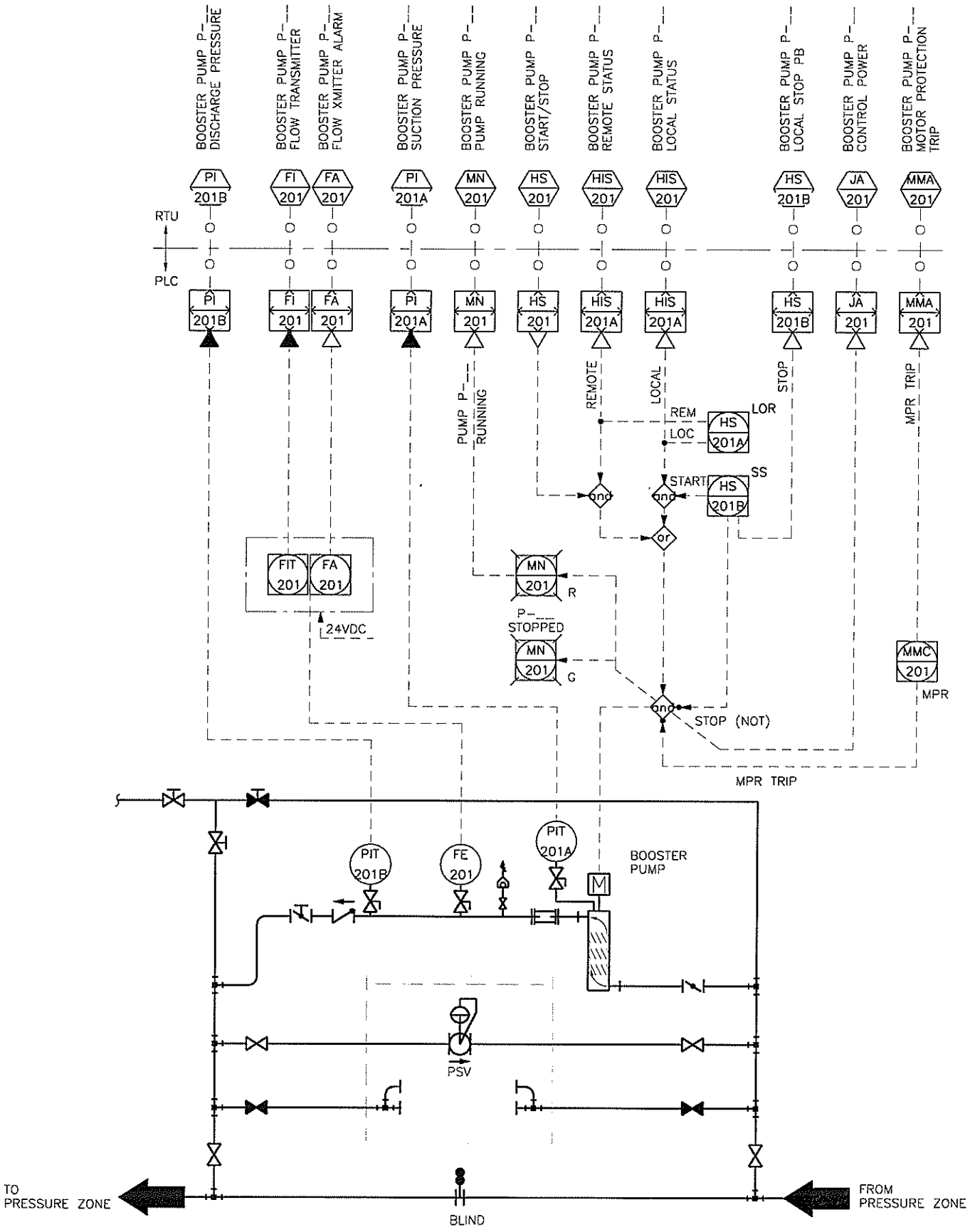

BOOSTER PUMP PROCESS AND INSTRUMENTATION DIAGRAM

NOT TO SCALE

IT04-4 101005

FOR REFERENCE ONLY

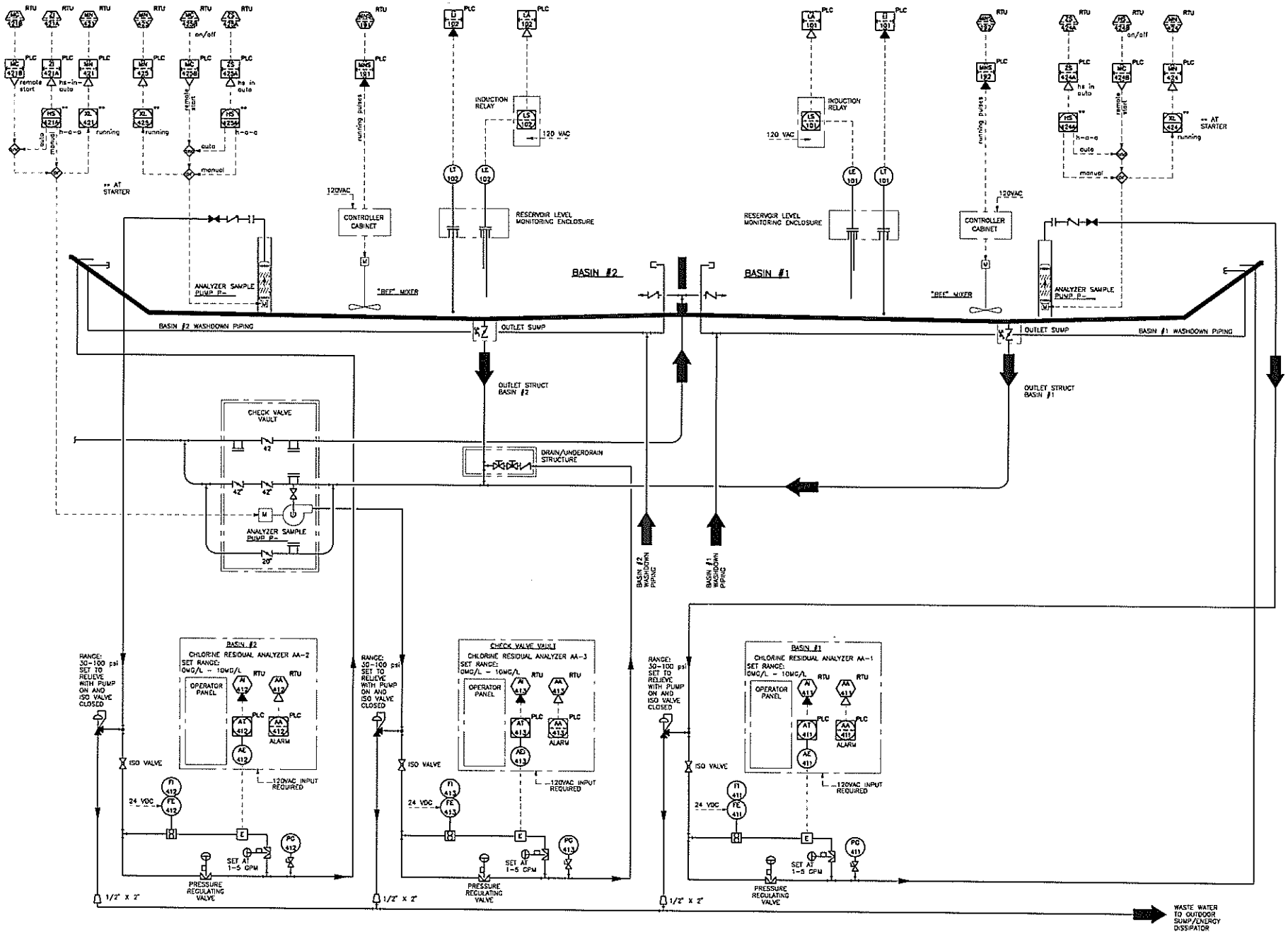

DISINFECTION SYSTEM AND RESERVOIR MIXER
PROCESS AND INSTRUMENTATION DIAGRAM

NOT TO SCALE IT04-5 102405

FOR REFERENCE ONLY

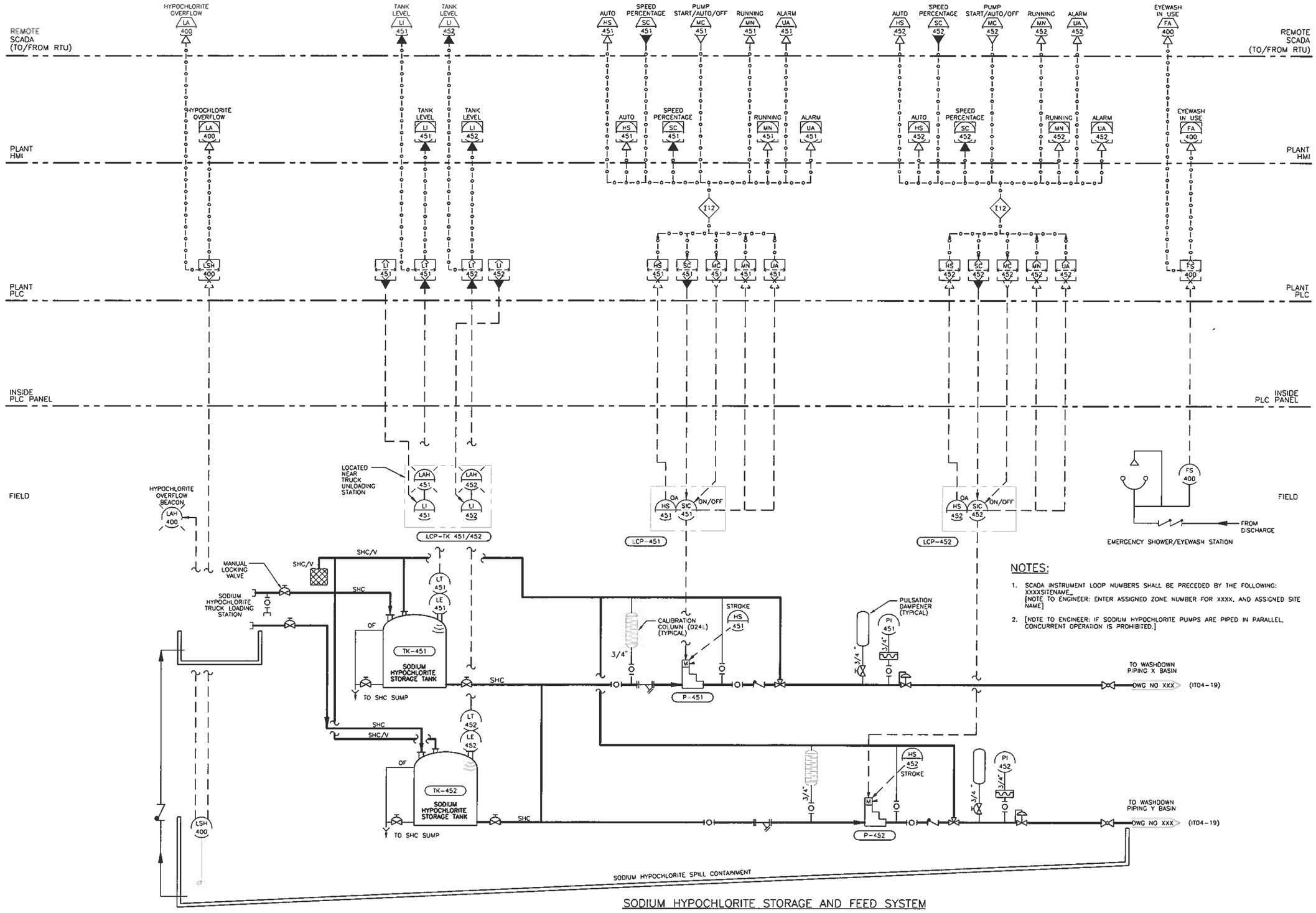

NOTES:

1. SCADA INSTRUMENT LOOP NUMBERS SHALL BE PRECEDED BY THE FOLLOWING: XXXXSITENAME_ [NOTE TO ENGINEER: ENTER ASSIGNED ZONE NUMBER FOR XXXX, AND ASSIGNED SITE NAME]
2. [NOTE TO ENGINEER: IF SODIUM HYPOCHLORITE PUMPS ARE PIPED IN PARALLEL, CONCURRENT OPERATION IS PROHIBITED.]

SODIUM HYPOCHLORITE STORAGE AND FEED SYSTEM

NAOCL STORAGE AND FEED SYSTEM PROCESS AND INSTRUMENTATION DIAGRAM

NOT TO SCALE IT04-6 041907

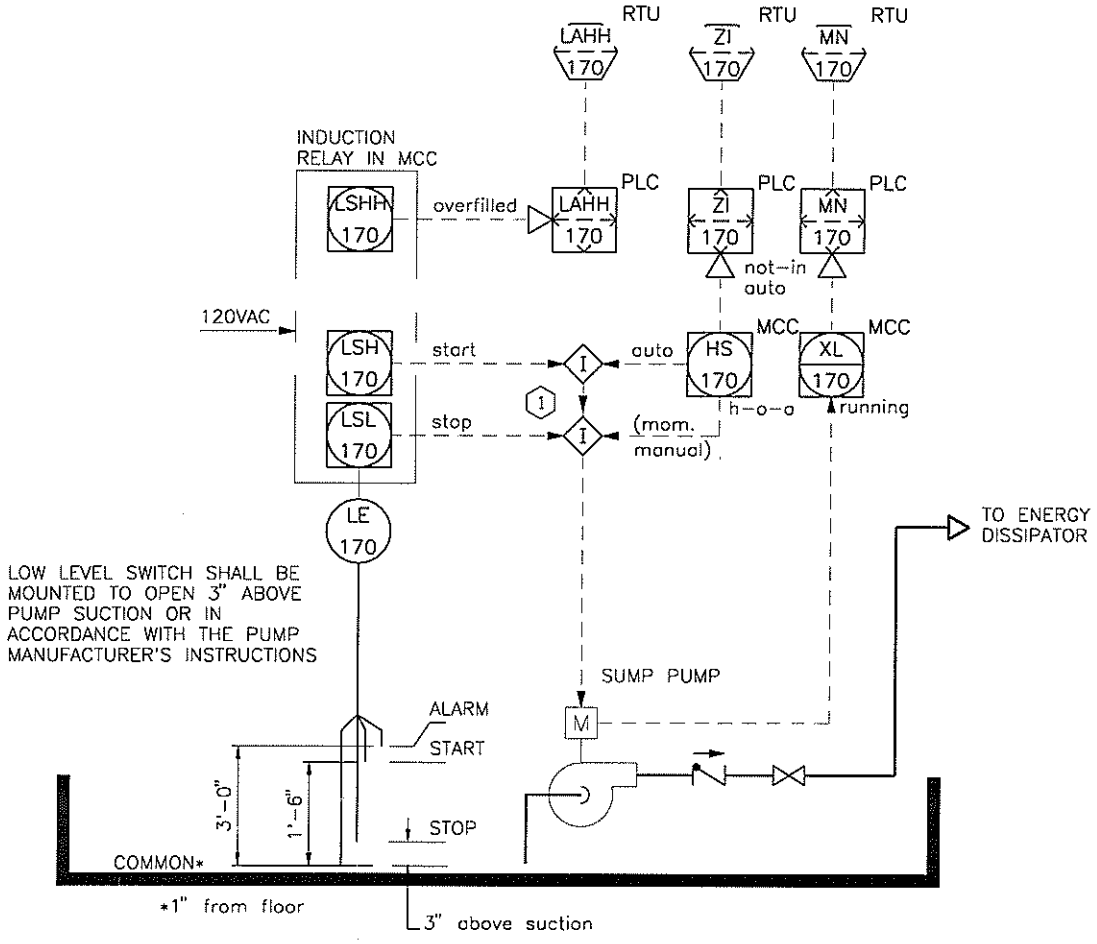

VALVE VAULT SUMP PUMP PROCESS AND INSTRUMENTATION DIAGRAM

NOT TO SCALE

IT04-7 101405

FOR REFERENCE ONLY

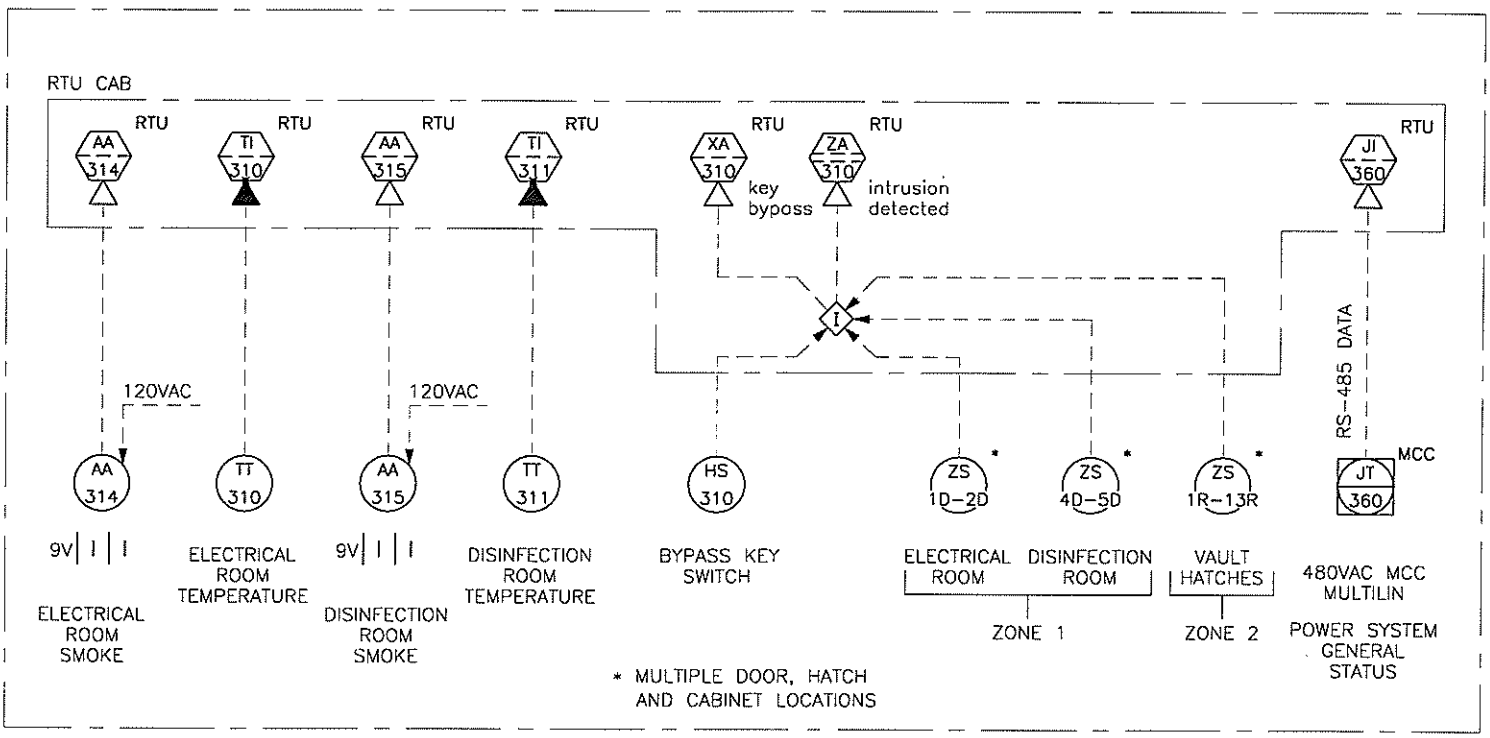

BUILDING AND SITE SYSTEMS PROCESS AND INSTRUMENTATION DIAGRAM

NOT TO SCALE

IT04-8 101705

FOR REFERENCE ONLY

ELECTRICAL ROOM – RTU CABINET

RTU LOGIC FUNCTION:

1. LSL DROPS OUT TO SHUT DOWN BOTH PUMPS.
2. LSH STARTS ONE PUMP BASED ON ALTERNATING OPERATION.
3. LSHH STARTS BOTH PUMPS WHICH RUN UNTIL LSL DROPS OUT.
4. PLC BASED "START–STOP" LOGIC DRIVEN BY ITEMS 1, 2, AND 3, ABOVE WHEN HAND SWITCH IS IN AUTO POSITION.

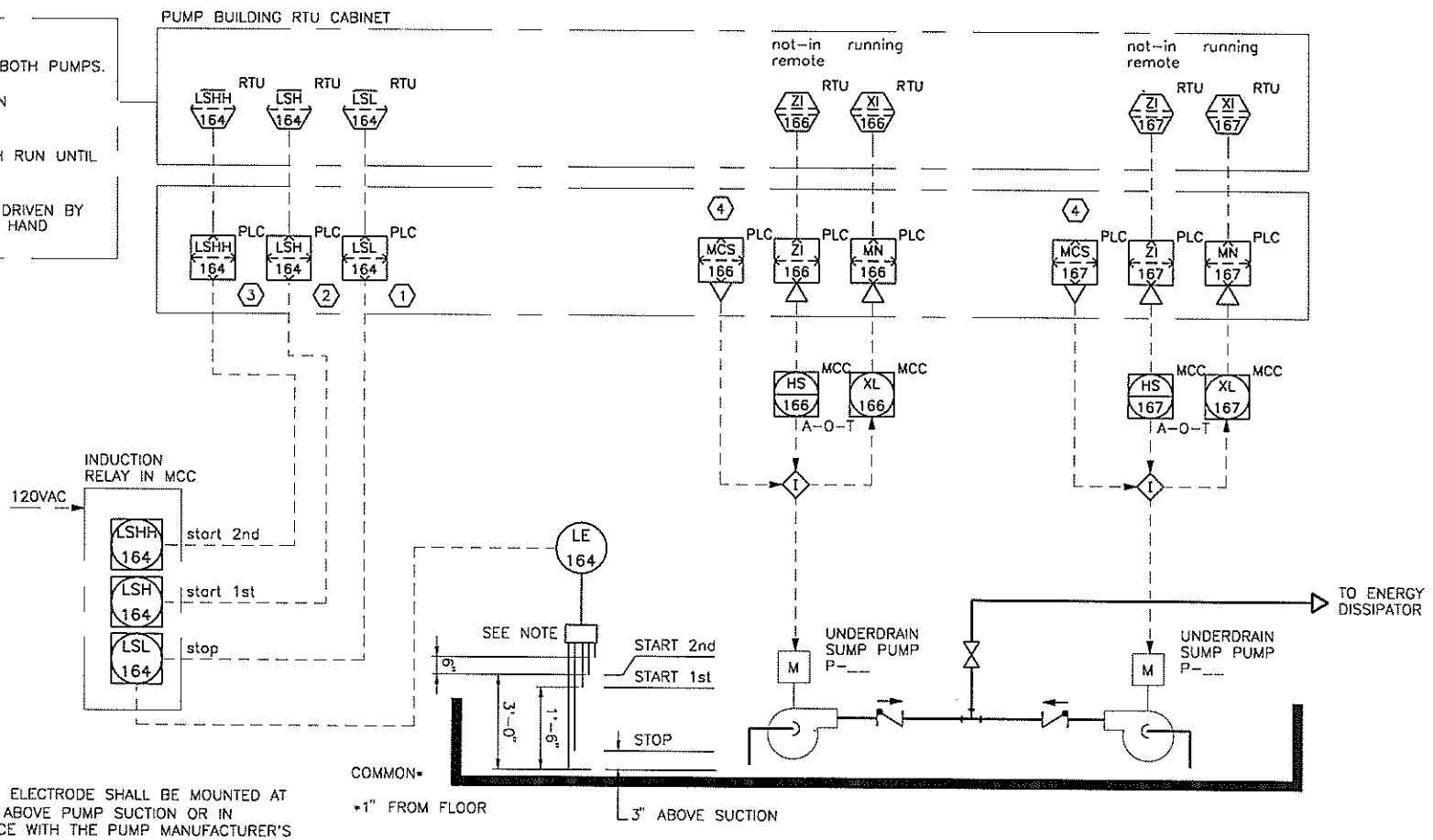

NOTE:
LOW LEVEL ELECTRODE SHALL BE MOUNTED AT EITHER 3" ABOVE PUMP SUCTION OR IN ACCORDANCE WITH THE PUMP MANUFACTURER'S INSTRUCTIONS AS REQUIRED FOR MECHANICAL PROTECTION.

DRAIN/UNDERDRAIN STRUCTURE SUMP PUMPS PROCESS AND INSTRUMENTATION DIAGRAM

NOT TO SCALE IT04–9 101705

FOR REFERENCE ONLY

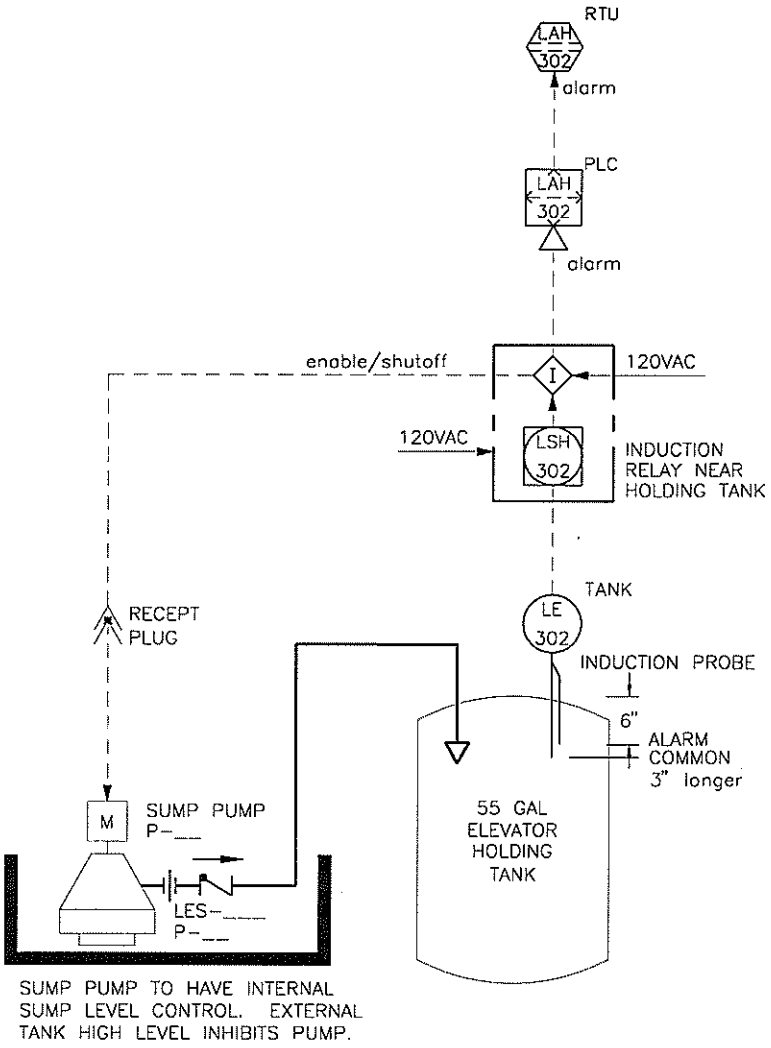

ELEVATOR SUMP PUMP PROCESS AND INSTRUMENTATION DIAGRAM

NOT TO SCALE

IT04-10 101905

FOR REFERENCE ONLY

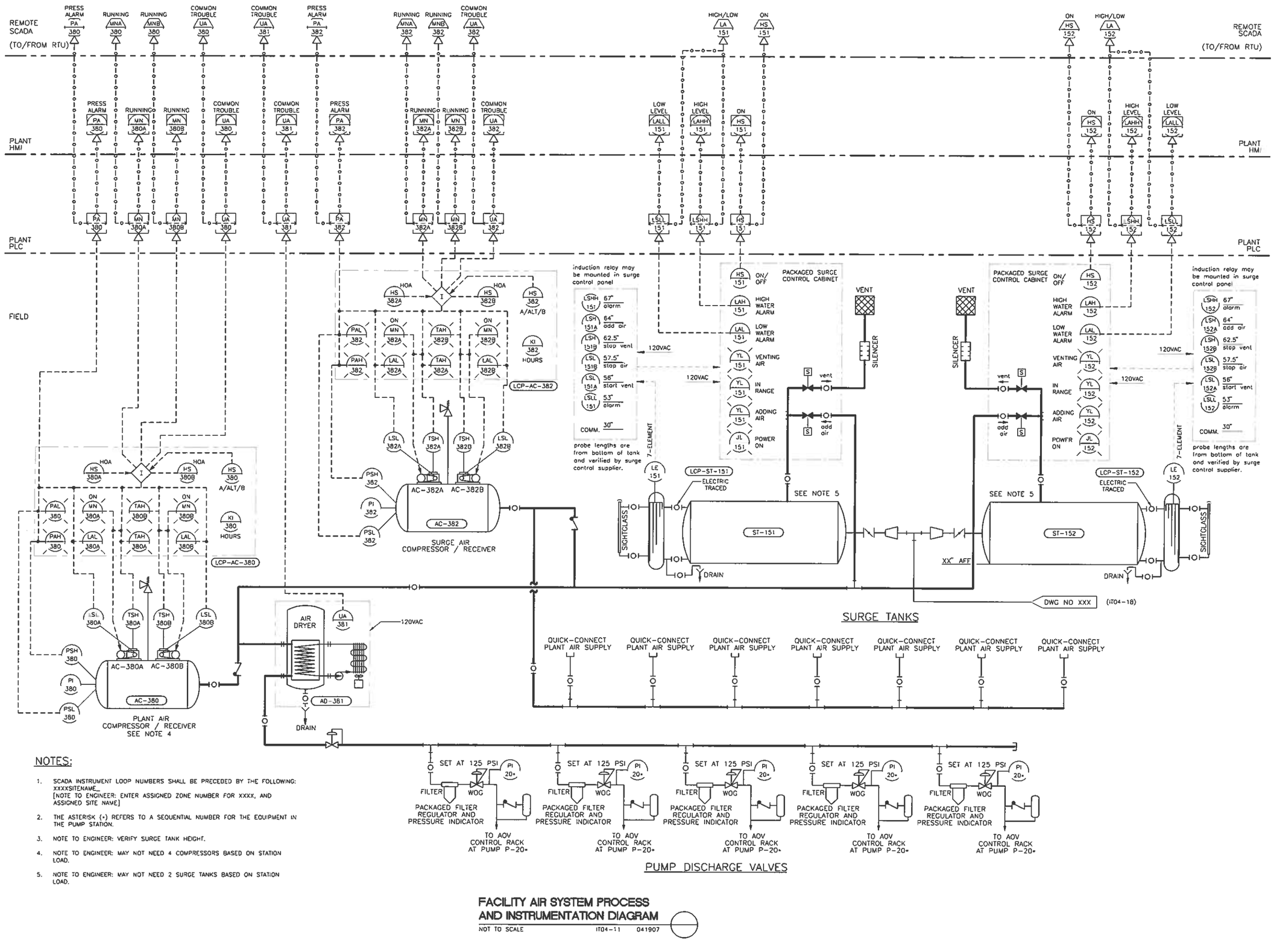

NOTES:

1. SCADA INSTRUMENT LOOP NUMBERS SHALL BE PRECEDED BY THE FOLLOWING: XXXXSITENAME_ [NOTE TO ENGINEER: ENTER ASSIGNED ZONE NUMBER FOR XXXX, AND ASSIGNED SITE NAME]
2. THE ASTERISK (*) REFERS TO A SEQUENTIAL NUMBER FOR THE EQUIPMENT IN THE PUMP STATION.
3. NOTE TO ENGINEER: VERIFY SURGE TANK HEIGHT.
4. NOTE TO ENGINEER: MAY NOT NEED 4 COMPRESSORS BASED ON STATION LOAD.
5. NOTE TO ENGINEER: MAY NOT NEED 2 SURGE TANKS BASED ON STATION LOAD.

FACILITY AIR SYSTEM PROCESS AND INSTRUMENTATION DIAGRAM

NOT TO SCALE IT04-11 041907

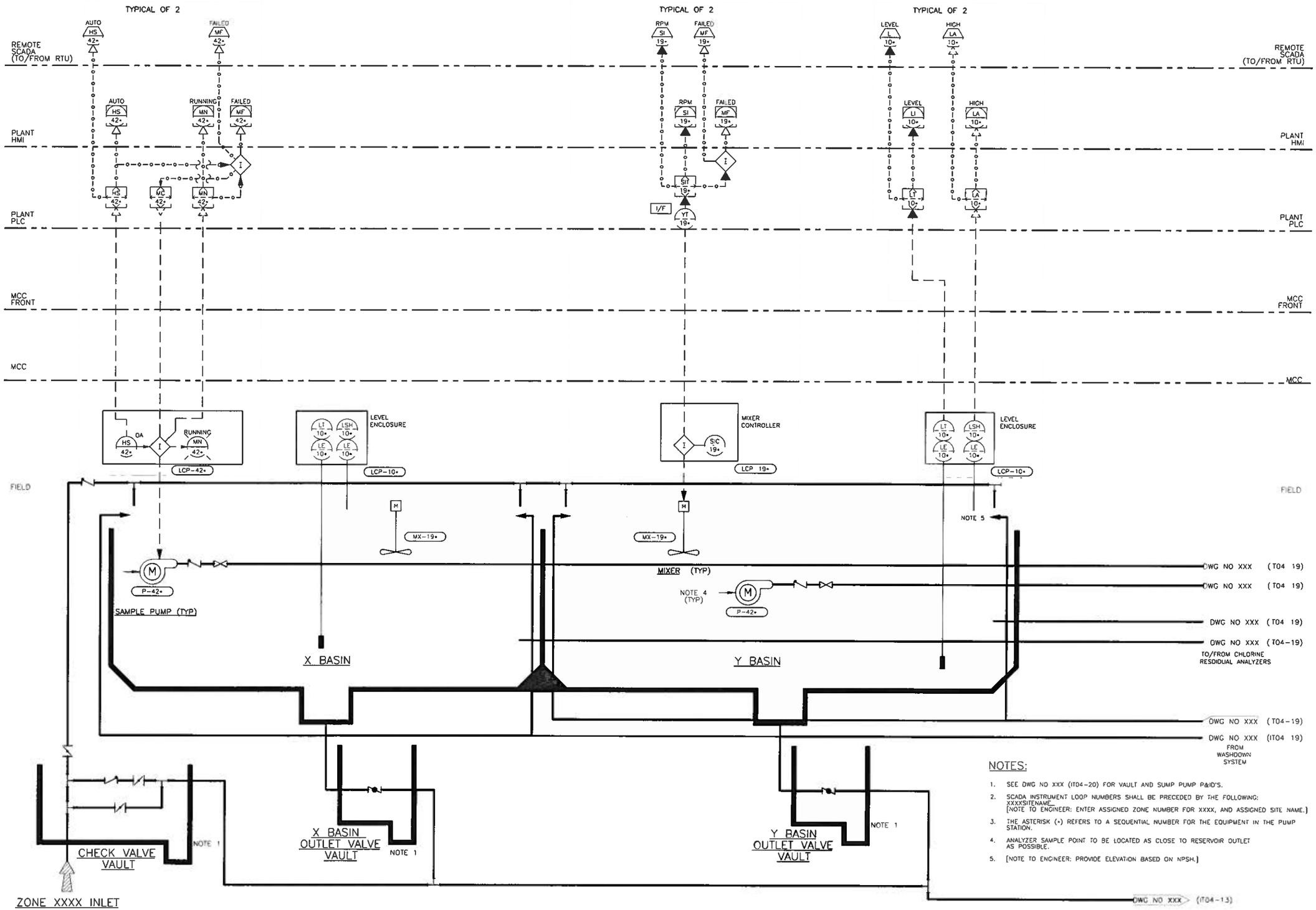

NOTES:

1. SEE DWG NO XXX (IT04-20) FOR VAULT AND SUMP PUMP P&ID'S.
2. SCADA INSTRUMENT LOOP NUMBERS SHALL BE PRECEDED BY THE FOLLOWING: XXXXSITENAME_ [NOTE TO ENGINEER: ENTER ASSIGNED ZONE NUMBER FOR XXXX, AND ASSIGNED SITE NAME.]
3. THE ASTERISK (*) REFERS TO A SEQUENTIAL NUMBER FOR THE EQUIPMENT IN THE PUMP STATION.
4. ANALYZER SAMPLE POINT TO BE LOCATED AS CLOSE TO RESERVOIR OUTLET AS POSSIBLE.
5. [NOTE TO ENGINEER: PROVIDE ELEVATION BASED ON NPSH.]

ZONE PUMP STRING RESERVOIR AND VAULT PROCESS AND INSTRUMENTATION DIAGRAM

NOT TO SCALE IT04-12 041907

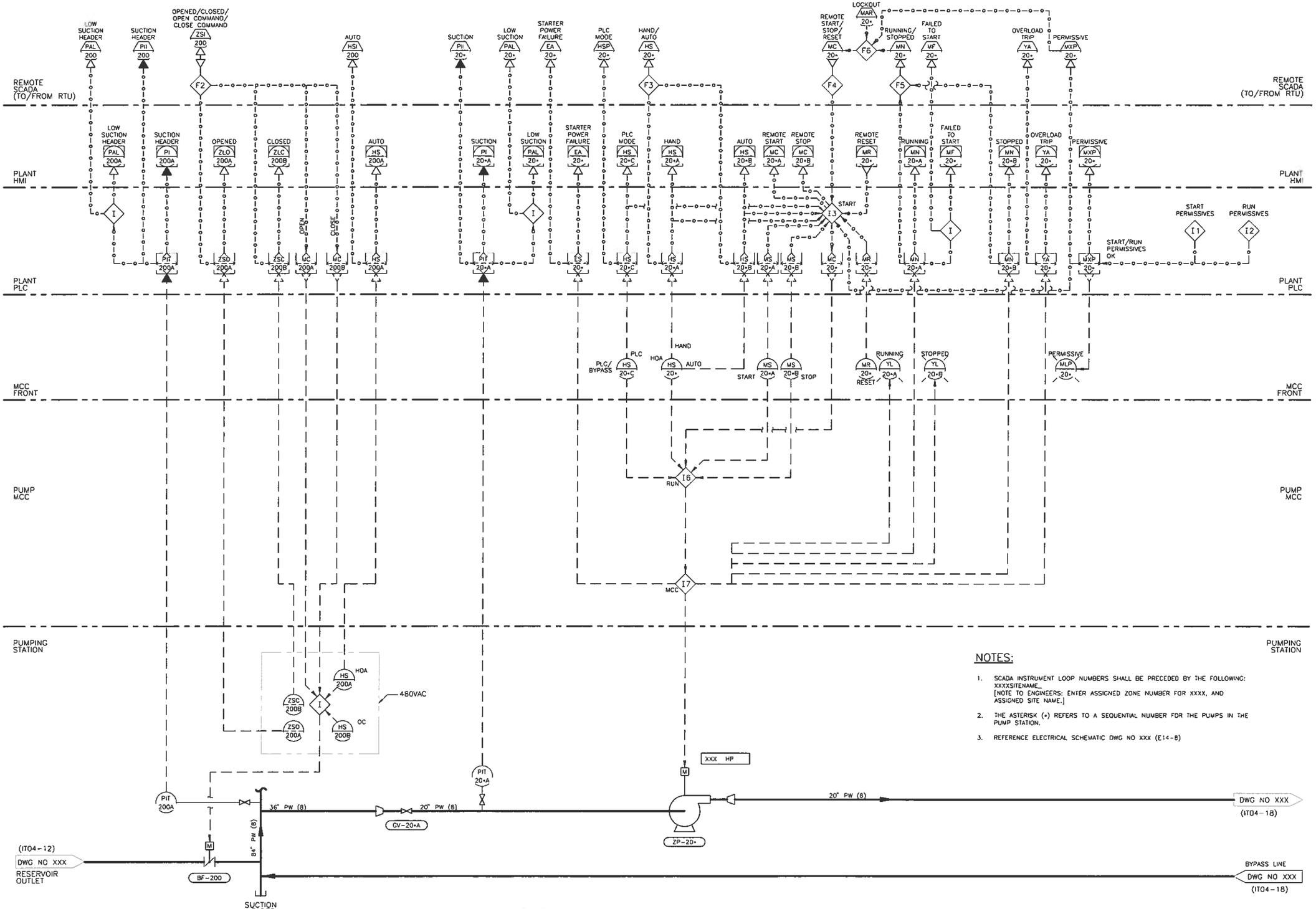

ZONE PUMP STRING TYPICAL 480V FVNR MOTOR STARTER PROCESS AND INSTRUMENTATION DIAGRAM

NOT TO SCALE IT04-13 041907

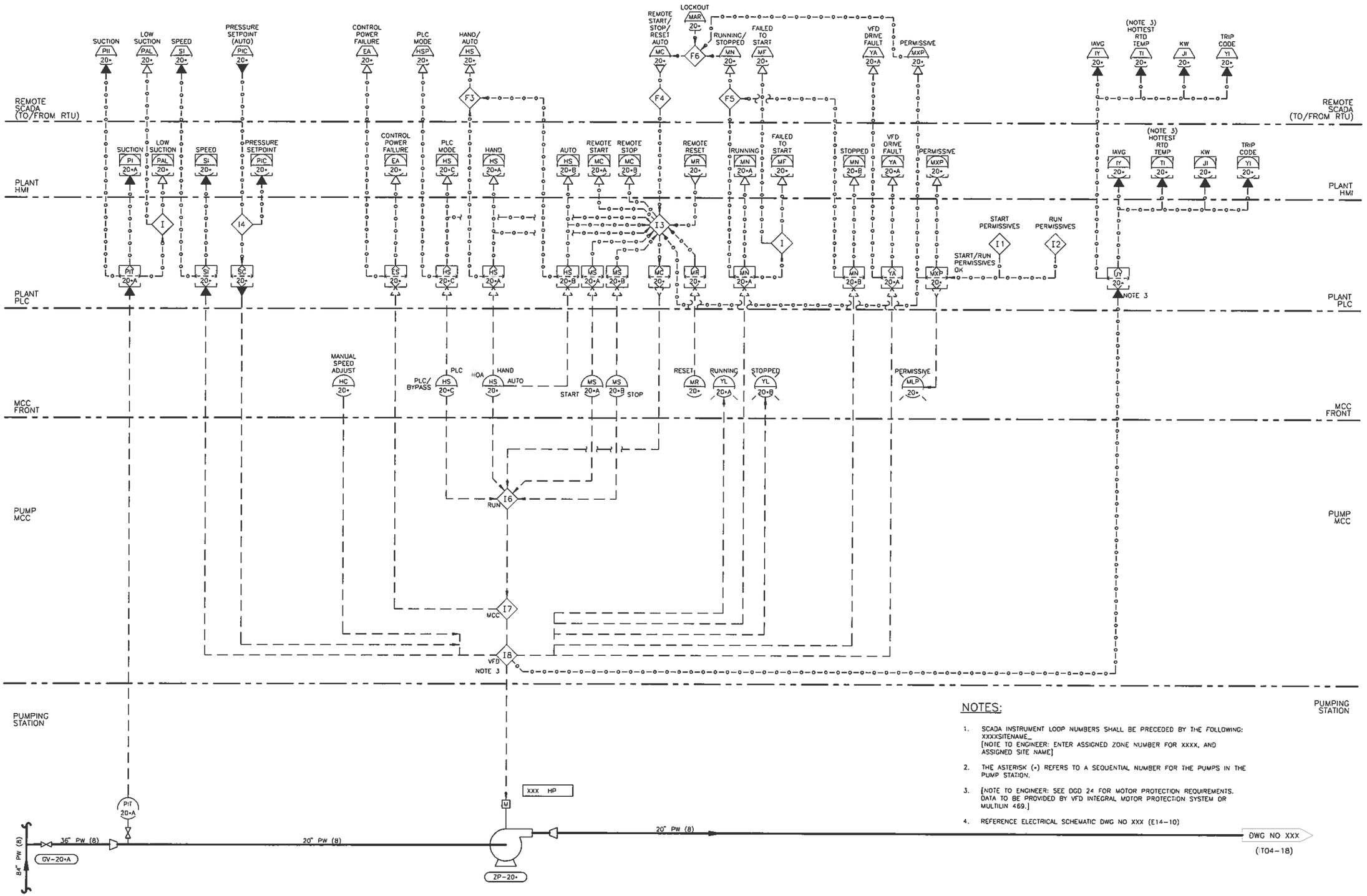

NOTES:

1. SCADA INSTRUMENT LOOP NUMBERS SHALL BE PRECEDED BY THE FOLLOWING: XXXXSITENAME_
   [NOTE TO ENGINEER: ENTER ASSIGNED ZONE NUMBER FOR XXXX, AND ASSIGNED SITE NAME]
2. THE ASTERISK (*) REFERS TO A SEQUENTIAL NUMBER FOR THE PUMPS IN THE PUMP STATION.
3. [NOTE TO ENGINEER: SEE DGD 24 FOR MOTOR PROTECTION REQUIREMENTS. DATA TO BE PROVIDED BY VFD INTEGRAL MOTOR PROTECTION SYSTEM OR MULTILIN 469.]
4. REFERENCE ELECTRICAL SCHEMATIC DWG NO XXX (E14-10)

ZONE PUMP STRING TYPICAL 480V VFD - DRIVEN MOTOR PROCESS AND INSTRUMENTATION DIAGRAM

NOT TO SCALE

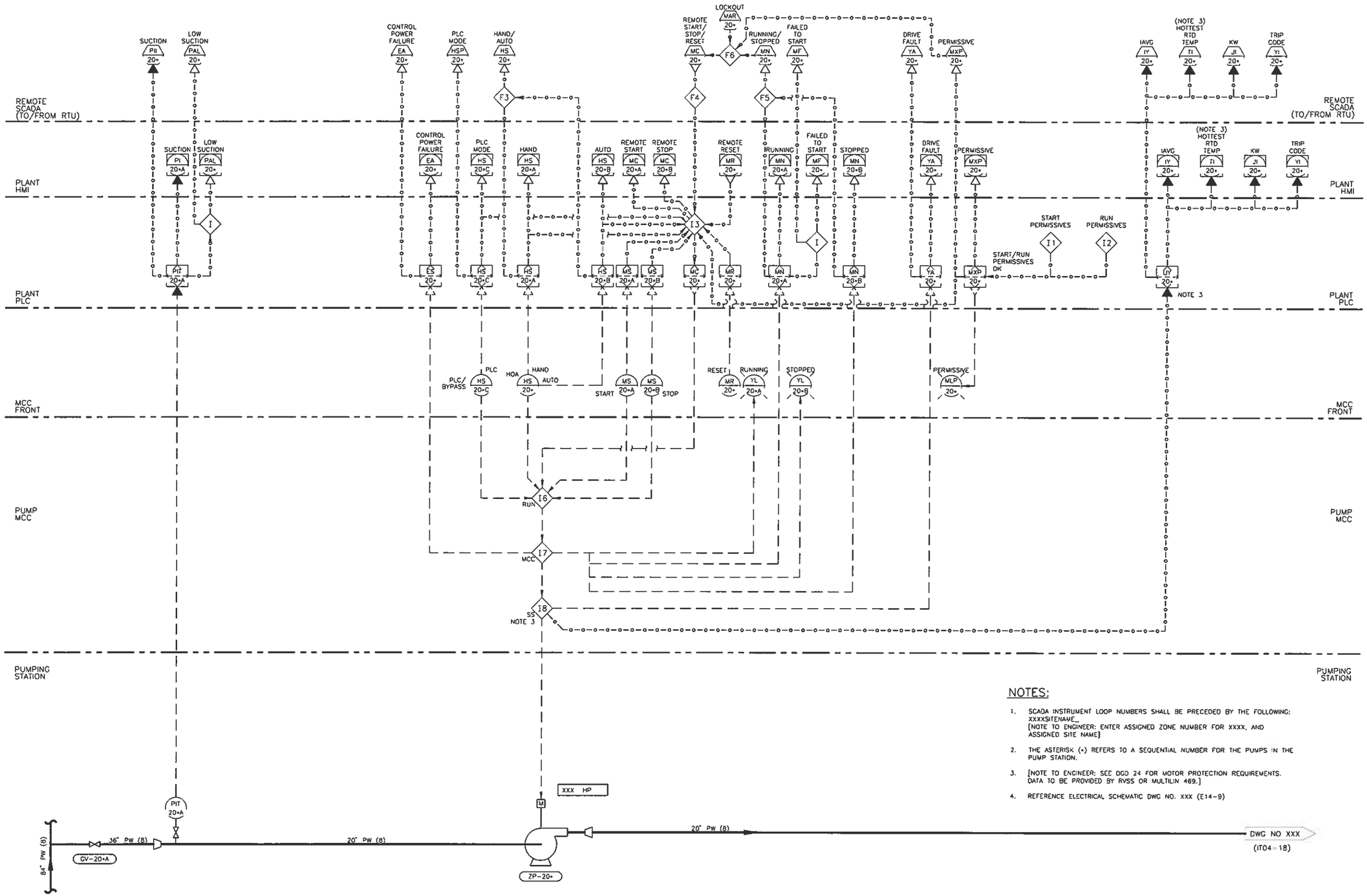

NOTES:

1. SCADA INSTRUMENT LOOP NUMBERS SHALL BE PRECEDED BY THE FOLLOWING: XXXXSITENAME_ [NOTE TO ENGINEER: ENTER ASSIGNED ZONE NUMBER FOR XXXX, AND ASSIGNED SITE NAME]
2. THE ASTERISK (•) REFERS TO A SEQUENTIAL NUMBER FOR THE PUMPS IN THE PUMP STATION.
3. [NOTE TO ENGINEER: SEE DGD 24 FOR MOTOR PROTECTION REQUIREMENTS. DATA TO BE PROVIDED BY RVSS OR MULTILIN 469.]
4. REFERENCE ELECTRICAL SCHEMATIC DWG NO. XXX (E14-9)

ZONE PUMP STRING TYPICAL 480V RVSS MOTOR STARTER PROCESS AND INSTRUMENTATION DIAGRAM

NOT TO SCALE — IT04-15 — 041907

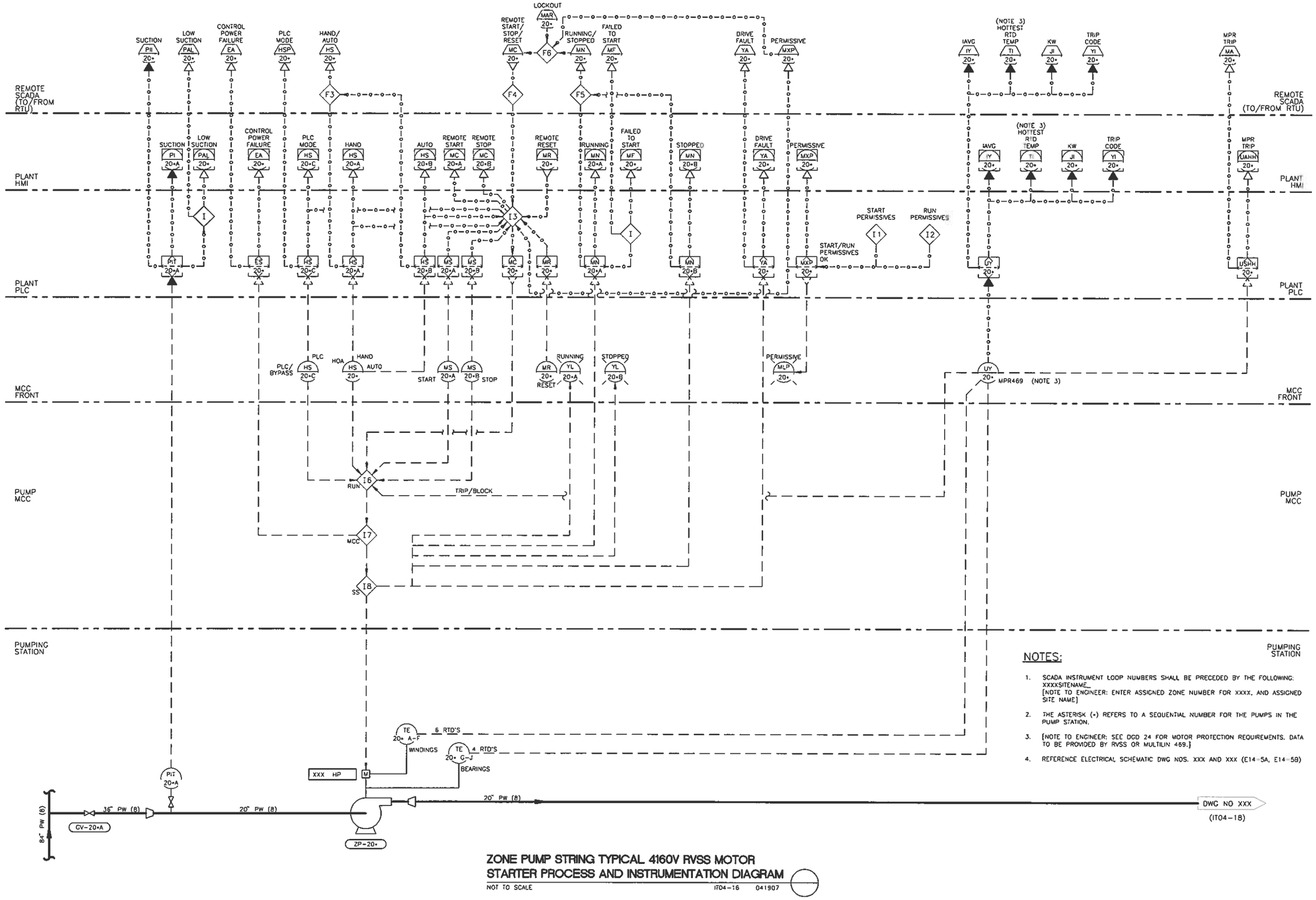

NOTES:

1. SCADA INSTRUMENT LOOP NUMBERS SHALL BE PRECEDED BY THE FOLLOWING: XXXXSITENAME_ [NOTE TO ENGINEER: ENTER ASSIGNED ZONE NUMBER FOR XXXX, AND ASSIGNED SITE NAME]
2. THE ASTERISK (•) REFERS TO A SEQUENTIAL NUMBER FOR THE PUMPS IN THE PUMP STATION.
3. [NOTE TO ENGINEER: SEE DGD 24 FOR MOTOR PROTECTION REQUIREMENTS. DATA TO BE PROVIDED BY RVSS OR MULTILIN 469.]
4. REFERENCE ELECTRICAL SCHEMATIC DWG NOS. XXX AND XXX (E14-5A, E14-5B)

ZONE PUMP STRING TYPICAL 4160V RVSS MOTOR STARTER PROCESS AND INSTRUMENTATION DIAGRAM

NOT TO SCALE

IT04-16 041907

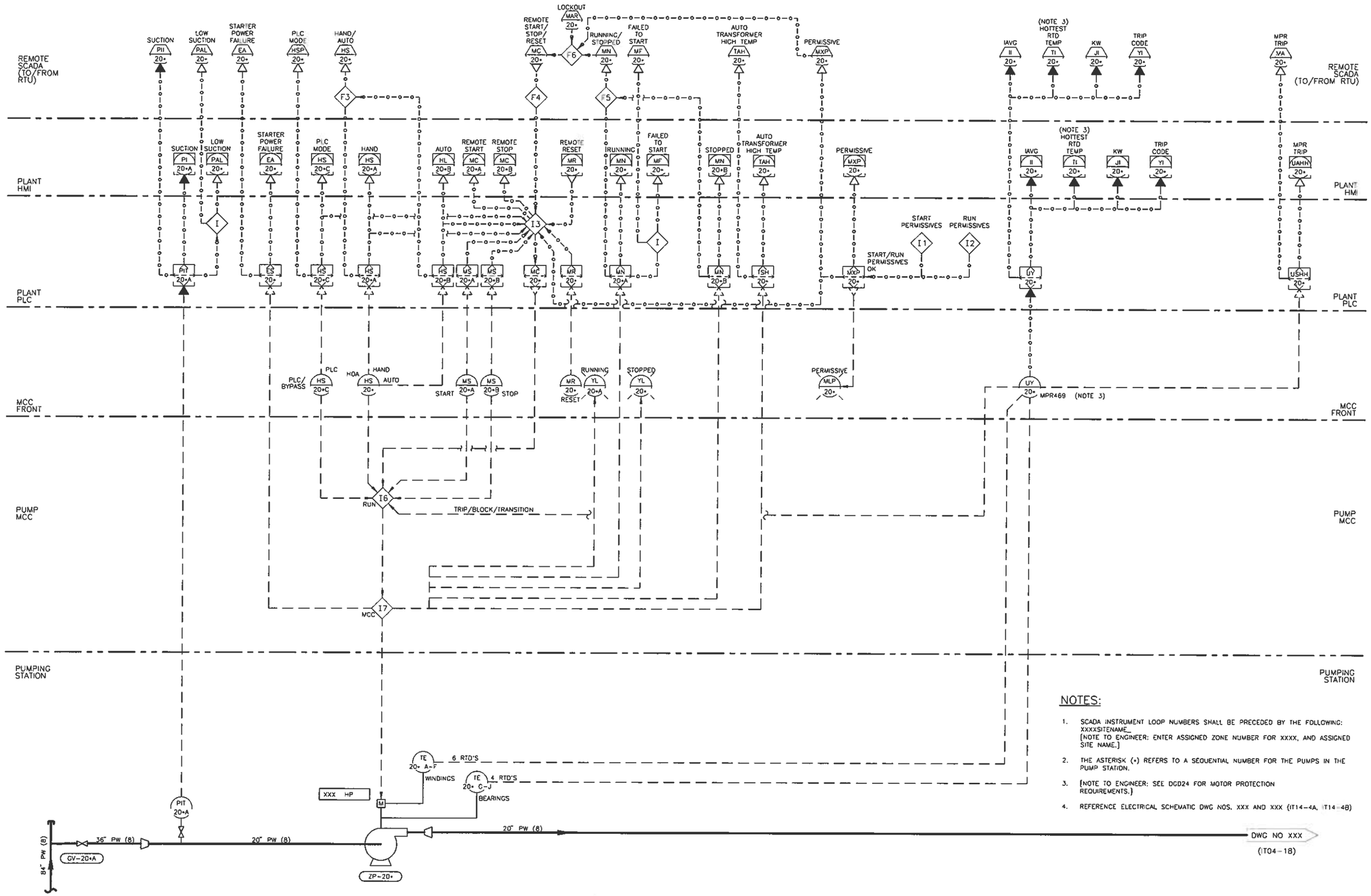

ZONE PUMP STRING TYPICAL 4160V RVAT MOTOR STARTER PROCESS AND INSTRUMENTATION DIAGRAM

NOT TO SCALE IT04-17 041907

NOTES:

1. SCADA INSTRUMENT LOOP NUMBERS SHALL BE PRECEDED BY THE FOLLOWING: XXXXSITENAME_. (NOTE TO ENGINEER: ENTER ASSIGNED ZONE NUMBER FOR XXXX, AND ASSIGNED SITE NAME.)
2. THE ASTERISK (*) REFERS TO A SEQUENTIAL NUMBER FOR THE PUMPS IN THE PUMP STATION.
3. (NOTE TO ENGINEER: SEE DGD24 FOR MOTOR PROTECTION REQUIREMENTS.)
4. REFERENCE ELECTRICAL SCHEMATIC DWG NOS. XXX AND XXX (IT14-4A, IT14-4B)

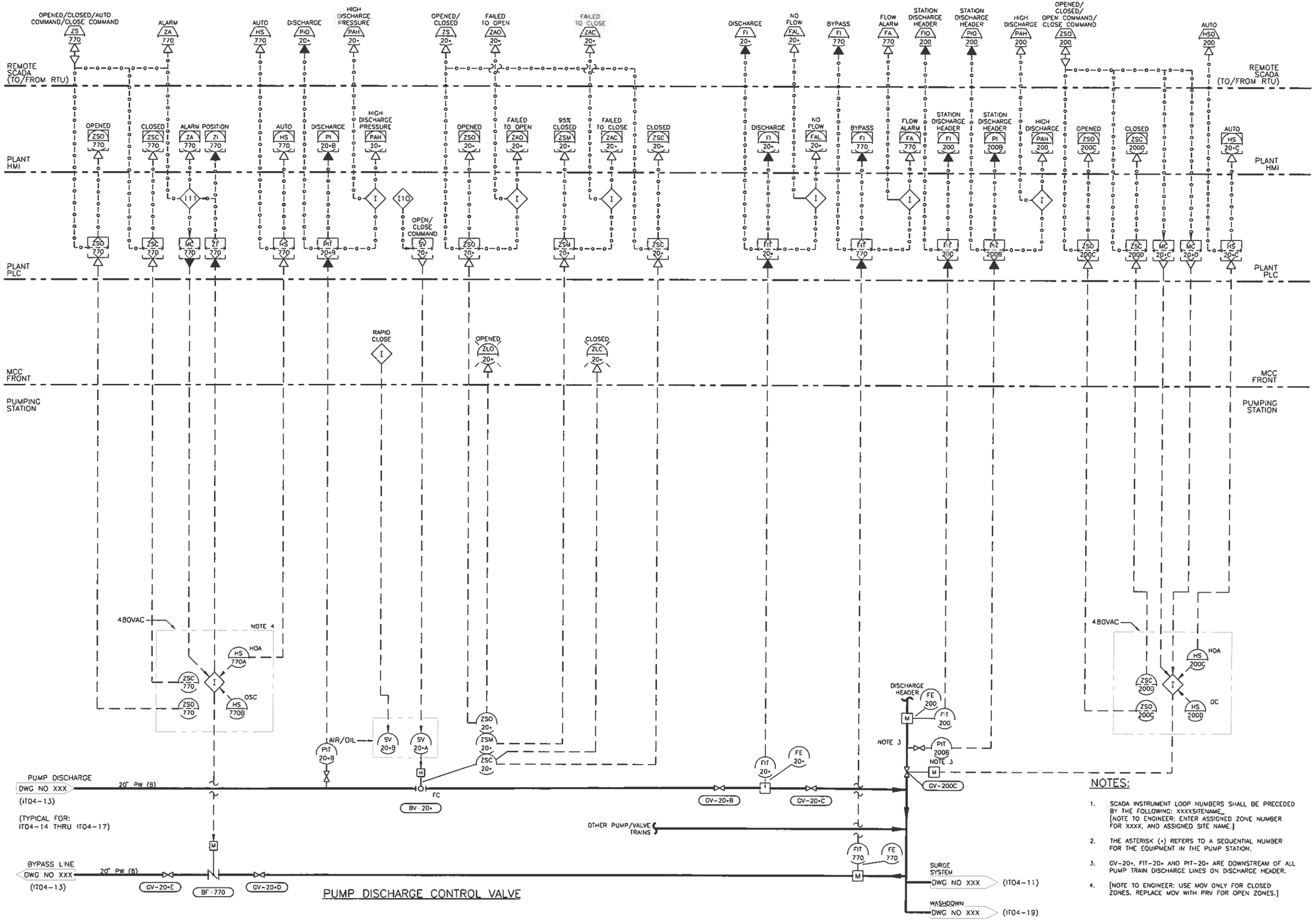

NOTES:

1. SCADA INSTRUMENT LOOP NUMBERS SHALL BE PRECEDED BY THE FOLLOWING: XXXXSITENAME_. [NOTE TO ENGINEER: ENTER ASSIGNED ZONE NUMBER FOR XXXX, AND ASSIGNED SITE NAME.]
2. THE ASTERISK (*) REFERS TO A SEQUENTIAL NUMBER FOR THE EQUIPMENT IN THE PUMP STATION.
3. GV-20*, FIT-20* AND PIT-20* ARE DOWNSTREAM OF ALL PUMP TRAIN DISCHARGE LINES ON DISCHARGE HEADER.
4. [NOTE TO ENGINEER: USE MOV ONLY FOR CLOSED ZONES. REPLACE MOV WITH PRV FOR OPEN ZONES.]

ZONE PUMP STRING TYPICAL DISCHARGE CONTROL VALVE PROCESS AND INSTRUMENTATION DIAGRAM

NOT TO SCALE

IT04-18 041907

REMOTE SCADA (TO/FROM RTU)

PLANT HMI

PLANT PLC

FIELD

X BASIN CHL RES AI 410

Y BASIN CHL RES AI 411

FLOW FI 430

AUTO HS 431

VALVE FAIL ZA 431

AUTO HS 432

VALVE FAIL ZA 432

AIT 410 — I13

AIT 411 — I13

FIT 430 — I15

HS 431 — SV 431 — I15

HS 432 — SV 432 — I15

HA HS 431 — I — LCP-MV-431 — NEAR VALVE

HA HS 432 — I — LCP-MV-432 — NEAR VALVE

PUMP DISCHARGE HEADER DWG NO XXX (IT04-18)

PI 430

FIT 430 — FE 430 — M

S — MV-431 — TO X BASIN DWG NO XXX (IT04-12)

(IT04-6) DWG NO XXX HYPOCHLORITE INJECTION

S — MV-432 — TO Y BASIN DWG NO XXX (IT04-12)

(IT04-6) DWG NO XXX HYPOCHLORITE INJECTION

TO EMERGENCY SHOWER/EYEWASH

DOMESTIC WATER

WASHDOWN SYSTEM

FROM SAMPLE PUMP Y (IT04-12) DWG NO XXX

FROM SAMPLE PUMP X (IT04-12) DWG NO XXX

AIT 410 — HS 410 ON/OFF — AE 410 — PI 410

X BASIN CHLORINE RESIDUAL ANALYZER

AIT 411 — HS 411 ON/OFF — AE 411 — PI 411

Y BASIN CHLORINE RESIDUAL ANALYZER

TO BASINS (IT04-12) DWG NO XXX

(IT04-12) DWG NO XXX

CHLORINE ANALYZERS

NOTE:

1. SCADA INSTRUMENT LOOP NUMBERS SHALL BE PRECEDED BY THE FOLLOWING: XXXXSITENAME_
   [NOTE TO ENGINEER: ENTER ASSIGNED ZONE NUMBER FOR XXXX, AND ASSIGNED SITE NAME]

CHLORINE ANALYZER AND WASHDOWN SYSTEM PROCESS AND INSTRUMENTATION DIAGRAM

NOT TO SCALE IT04-19 061510

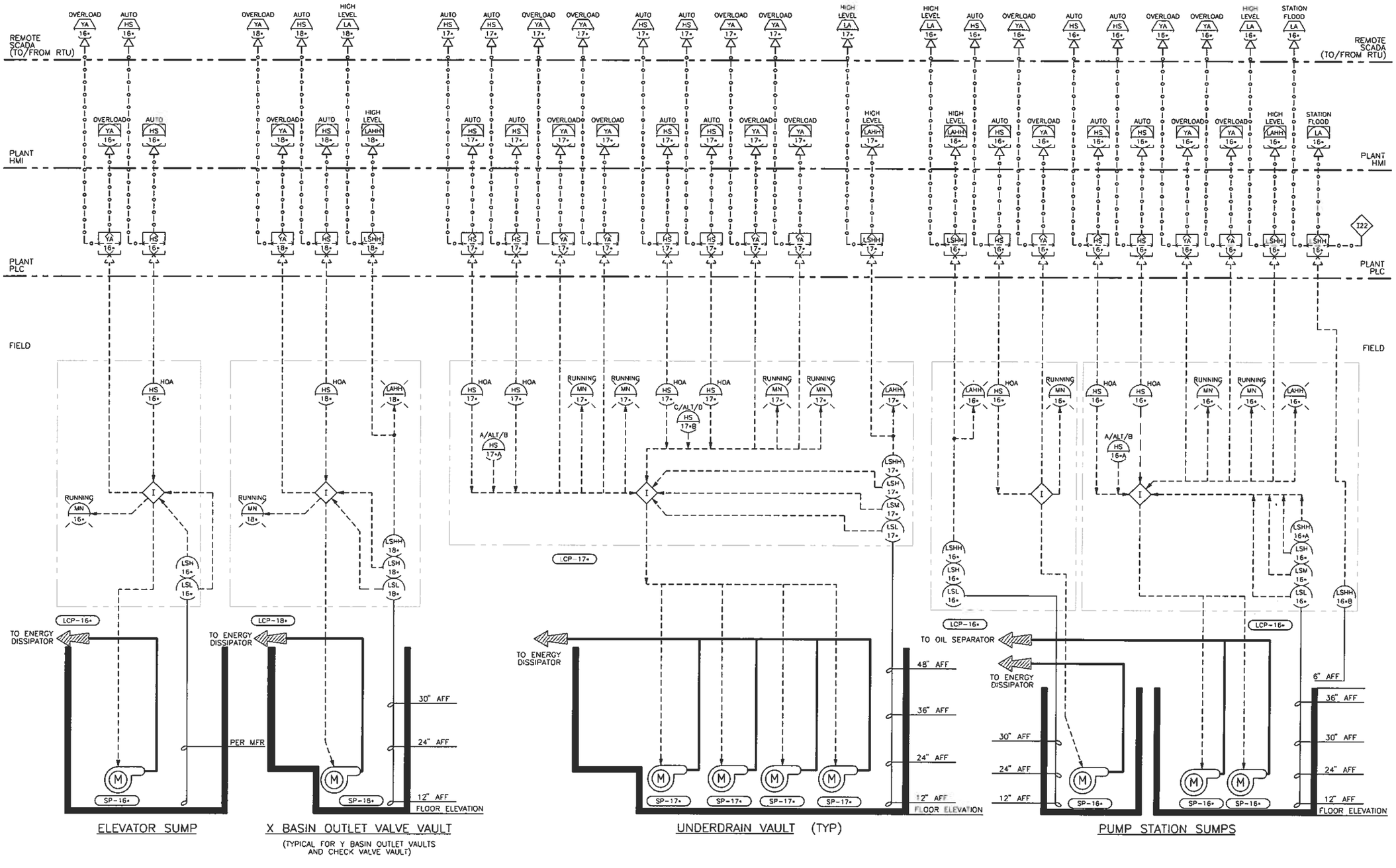

NOTES:

1. SCADA INSTRUMENT LOOP NUMBERS SHALL BE PRECEDED BY THE FOLLOWING: XXXXSITENAME_ [NOTE TO ENGINEER: ENTER ASSIGNED ZONE NUMBER FOR XXXX, AND ASSIGNED SITE NAME]
2. THE ASTERISK (*) REFERS TO A SEQUENTIAL NUMBER FOR THE EQUIPMENT IN THE PUMP STATION.

DISCHARGE PIPING AND VAULT PROCESS AND INSTRUMENTATION DIAGRAM

NOT TO SCALE IT04-20 041707

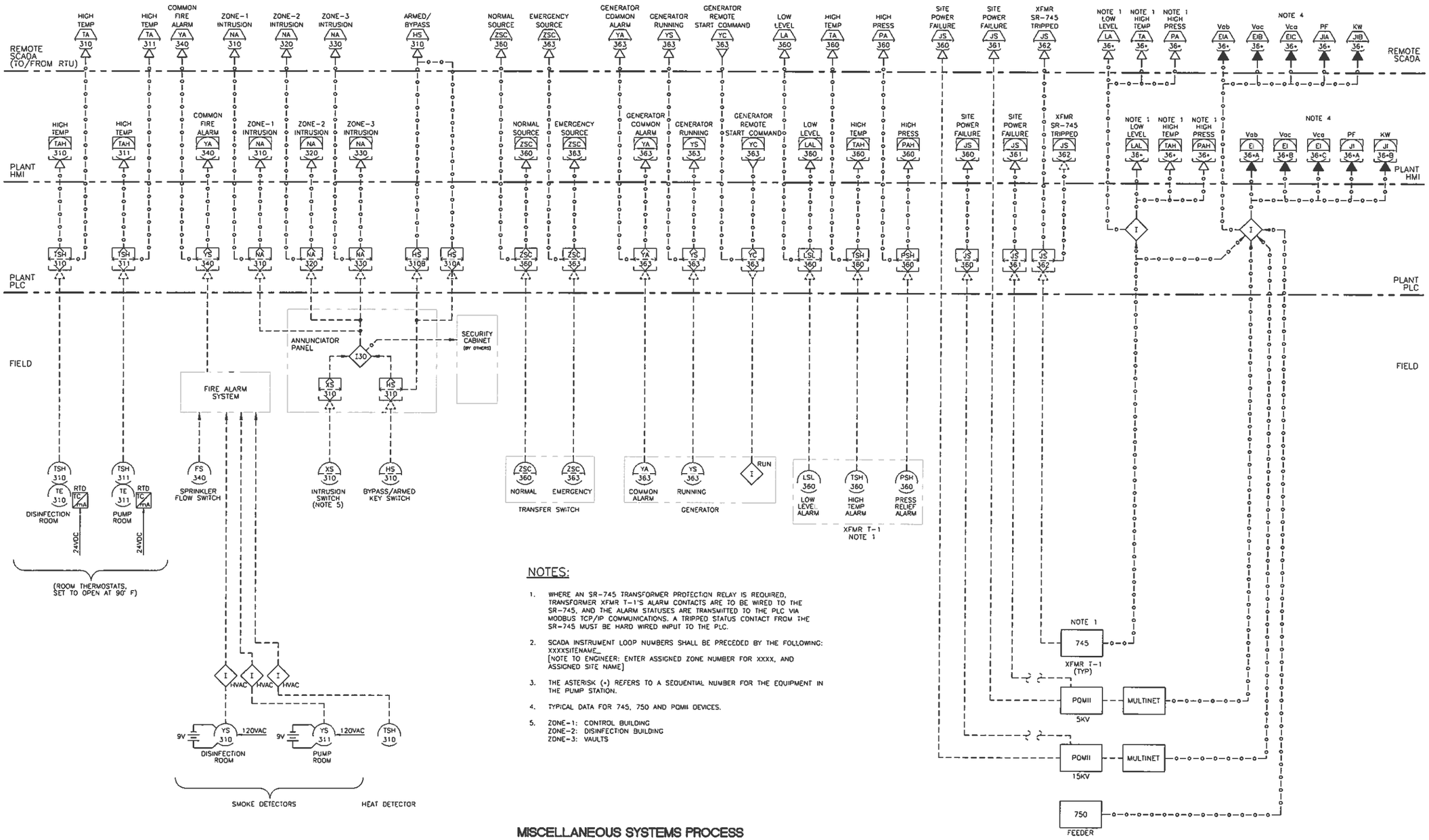

NOTES:

1. WHERE AN SR-745 TRANSFORMER PROTECTION RELAY IS REQUIRED, TRANSFORMER XFMR T-1'S ALARM CONTACTS ARE TO BE WIRED TO THE SR-745, AND THE ALARM STATUSES ARE TRANSMITTED TO THE PLC VIA MODBUS TCP/IP COMMUNICATIONS. A TRIPPED STATUS CONTACT FROM THE SR-745 MUST BE HARD WIRED INPUT TO THE PLC.
2. SCADA INSTRUMENT LOOP NUMBERS SHALL BE PRECEDED BY THE FOLLOWING: XXXXSITENAME_ [NOTE TO ENGINEER: ENTER ASSIGNED ZONE NUMBER FOR XXXX, AND ASSIGNED SITE NAME]
3. THE ASTERISK (*) REFERS TO A SEQUENTIAL NUMBER FOR THE EQUIPMENT IN THE PUMP STATION.
4. TYPICAL DATA FOR 745, 750 AND POMII DEVICES.
5. ZONE-1: CONTROL BUILDING
   ZONE-2: DISINFECTION BUILDING
   ZONE-3: VAULTS

MISCELLANEOUS SYSTEMS PROCESS AND INSTRUMENTATION DIAGRAM

NOT TO SCALE IT04-21 041707

EACH RUN OF CONDUIT WILL BE UTILIZED AS FOLLOWS:	
(1)	UPS AC POWER TO RTU.
(2)	CONTACTS FROM MCC (AS REQUIRED)
(7)	HELIAX HARD LINE FROM ANTENNA.
(11)	SPARE
(13)	TELCO ENTRY CABLE.

* PAD TO MATCH ENCLOSURE MANUFACTURERS REQUIREMENTS.

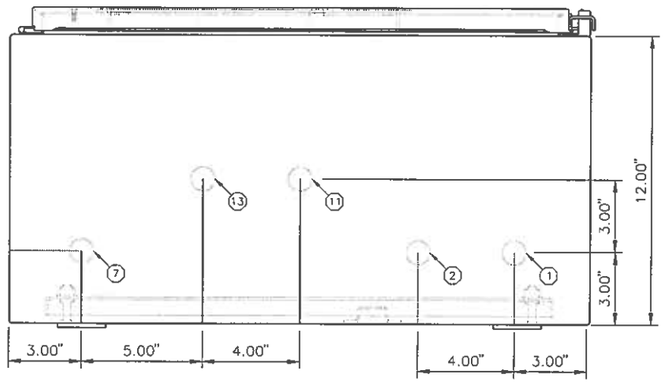

BOTTOM VIEW

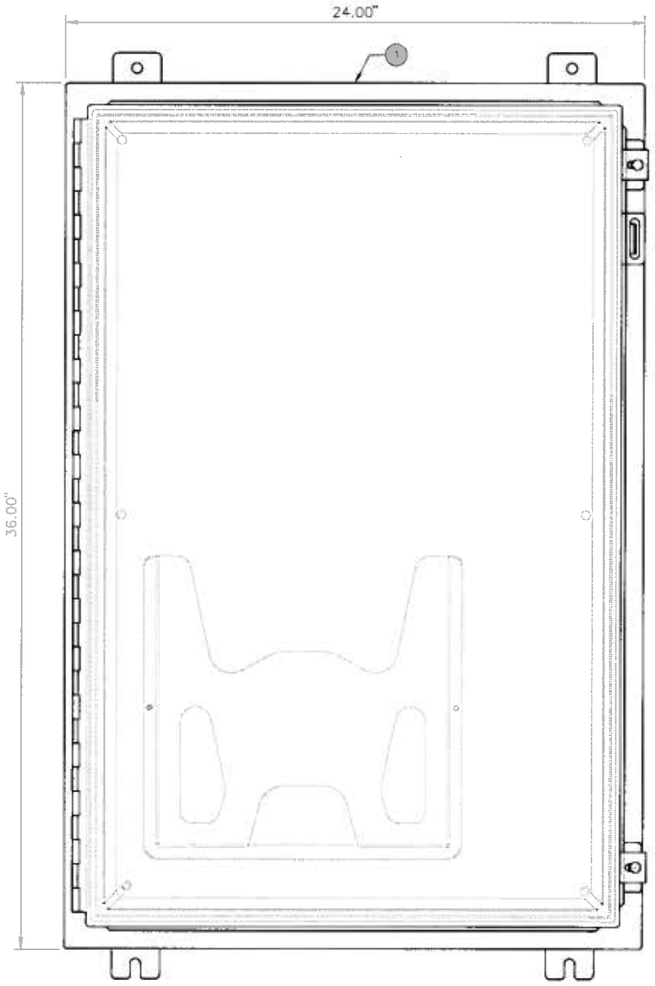

FRONT VIEW

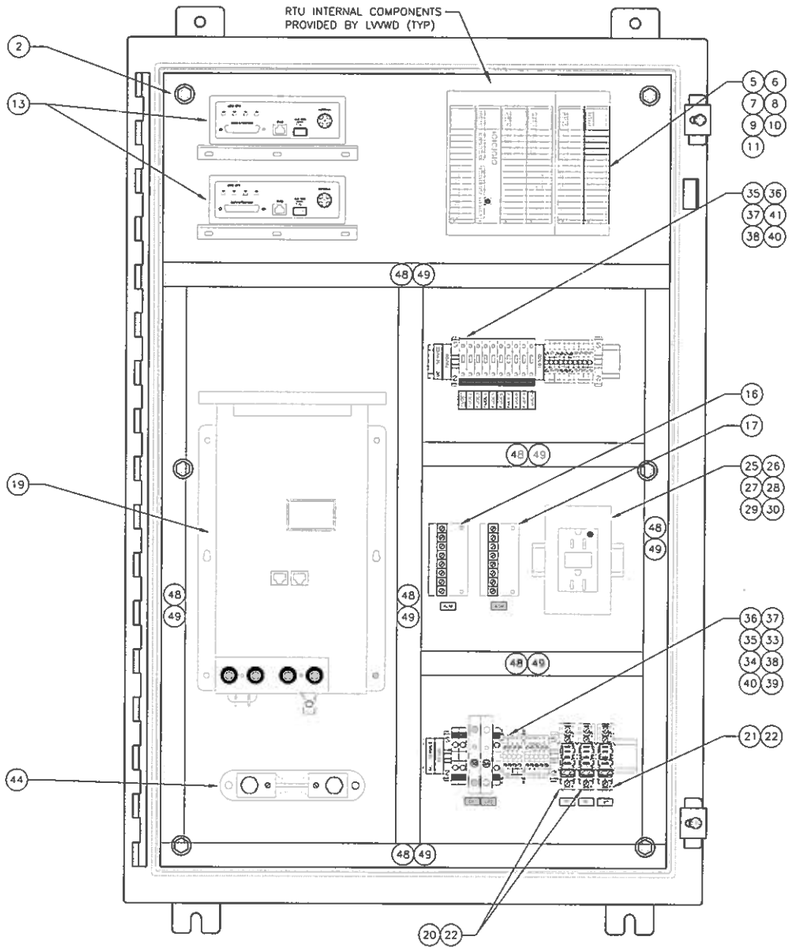

FRONT VIEW WITH DOOR REMOVED

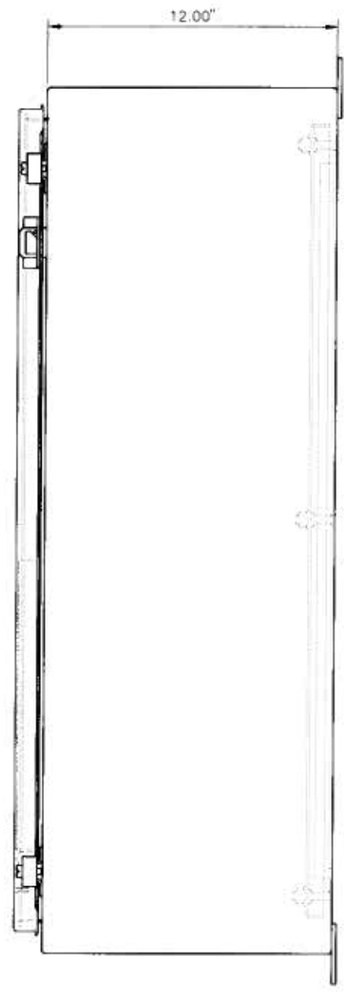

SIDE VIEW

RTU CONTROL PANEL LAYOUT PROCESS AND INSTRUMENTATION DIAGRAM

NOT TO SCALE 4T05-1 050807

RTU CONTROL PANEL BILL OF MATERIALS

ITEM	MANUFACTURER	PART#	DESCRIPTION	QTY
1	HOFFMAN	A-362412LP	NEMA 12 ENCLOSURE, 36" X 24" X 12"	1
2	HOFFMAN	A-36P24	SUB PANEL	1
3				
4				
5	BRISTOL BABCOCK	396560-02-4	CONTROLWAVE MICRO 4-SLOT BASE CHASSIS	1
6	BRISTOL BABCOCK	396559-03-4	2 SLOT EXPANSION BASE	1
7	BRISTOL BABCOCK	396609-01-5	POWER SUPPLY/SEQUENCER MODULE	1
8	BRISTOL BABCOCK	396563-06-6	CONTROLWAVE MICRO 150 CPU W/ ETHERNET PORT	1
9	BRISTOL BABCOCK	396567-02-9	12 INPUT/4 OUTPUT, DIGITAL I/O MODULE	1
10	BRISTOL BABCOCK	396568-01-7	6 INPUT/2 OUTPUT, ANALOG I/O MODULE	1
11	BRISTOL BABCOCK	396581-01-3	COMMUNICATION MODULE, 1 RS-232, 1 ISOLATED RS-485 PORT	2
12				
13	MICRO DATA SYS	MDS-9710B	FIXED FREQUENCY LICENSED RADIO	2
14				
15				
16	AGM ELECTRONICS	AUX4000-22	DC/DC CONVERTER (INPUT 0-15VDC)	1
17	AGM ELECTRONICS	AUX4000-22	DC/DC CONVERTER (INPUT -50 TO +50mv)	1
18				
19	NEWMAR	PHASE 3	DC POWER SUPPLY/BATTERY CHARGER	1
20	IDEC	RH1B-UL-AC120V	120VAC RELAY	1
21	IDEC	RH1B-UL-DC12V	12VDC RELAY	2
22	IDEC	SH1B-05C	FINGERSAFE DIN RAIL MOUNT RELAY SOCKET	3
23				
24				
25	BRYANT	N2101	DUPLEX RECEPTACLE COVER PLATE	1
26	BRYANT	GF52IL	RECEPTACLE, 15 AMP, DUPLEX, GFCI W/LED	1
27	APPLETON	CN50	NIPPLE, 1/2"	1
28	APPLETON	BL50	LOCK NUT, 1/2"	1
29	APPLETON	BBU50H	PLASTIC BUSHING, 1/2"	1
30	T&B	8660	STEEL, 4" x 2-1/8" x 1-7/8"	1
31				
32				
33	ALLEN-BRADLEY	1492-GH100	10A CIRCUIT BREAKER, SINGLE POLE	1
34	ALLEN-BRADLEY	1492-GH050	5A CIRCUIT BREAKER, SINGLE POLE	1
35	ALLEN-BRADLEY	1492-N23	END ANCHOR	A/R
36	ALLEN-BRADLEY	1492-N1	DIN RAIL, HI-RISE	A/R
37	ALLEN-BRADLEY	1492-N41	TERMINAL GROUP MARKER	A/R
38	ALLEN-BRADLEY	1492-H1BL	TERMINAL BLOCK, 20A (BLACK)	A/R
39	ALLEN-BRADLEY	1492-HL	TERMINAL BLOCK, 50A (WHITE)	A/R
40	ALLEN-BRADLEY	1492-N36	END BARRIER	A/R
41	ALLEN-BRADLEY	1492-H5	FUSED TERMINAL BLOCK	A/R
42				
43				
44	SIMPSON	06704	50mv, 10A SHUNT	1
45				
46				
47				
48	PANDUIT	C1X2DG6	WIRE DUCT, 1" X 2"	A/R
49	PANDUIT	C1DG6	WIRE DUCT COVER, 1"	A/R
50				
51				
52				
53	POWER SONIC	PS-12 350NB	BATTERY, 12VDC 35hr	2
54				
55				

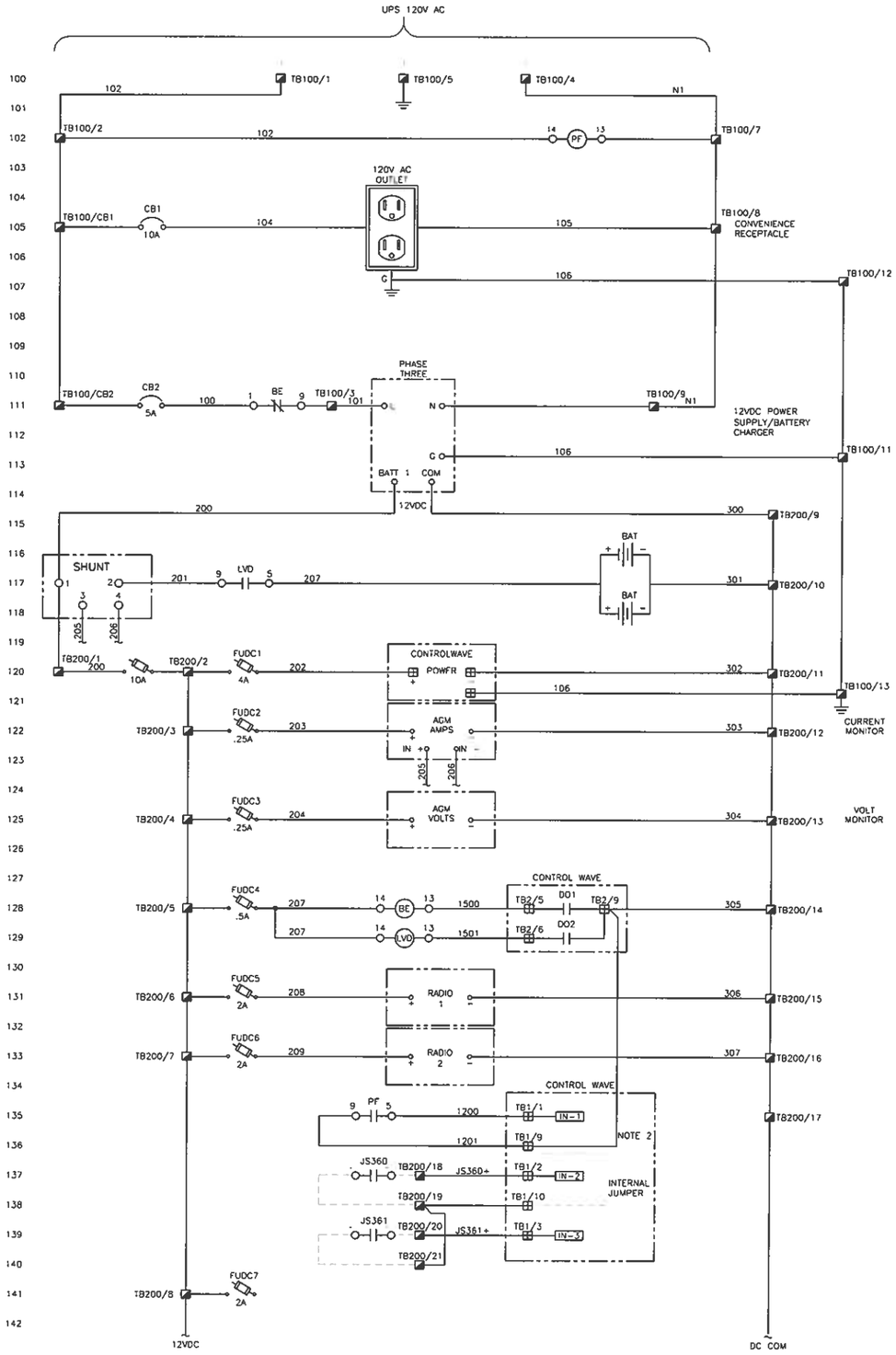

RTU CONTROL PANEL POWER DISTRIBUTION PROCESS AND INSTRUMENTATION DIAGRAM

NOT TO SCALE

IT05-3 041807

NOTES:

1. NOTE TO ENGINEER: PROVIDE TERMINALS AS REQUIRED FOR TERMINATION OF FIELD WIRING.
2. DIGITAL INPUT/OUTPUT MODULE COMMON.

LEGEND

- ⊞ TERMINAL IN CONTROL WAVE
- ◪ TERMINAL IN RTU CABINET

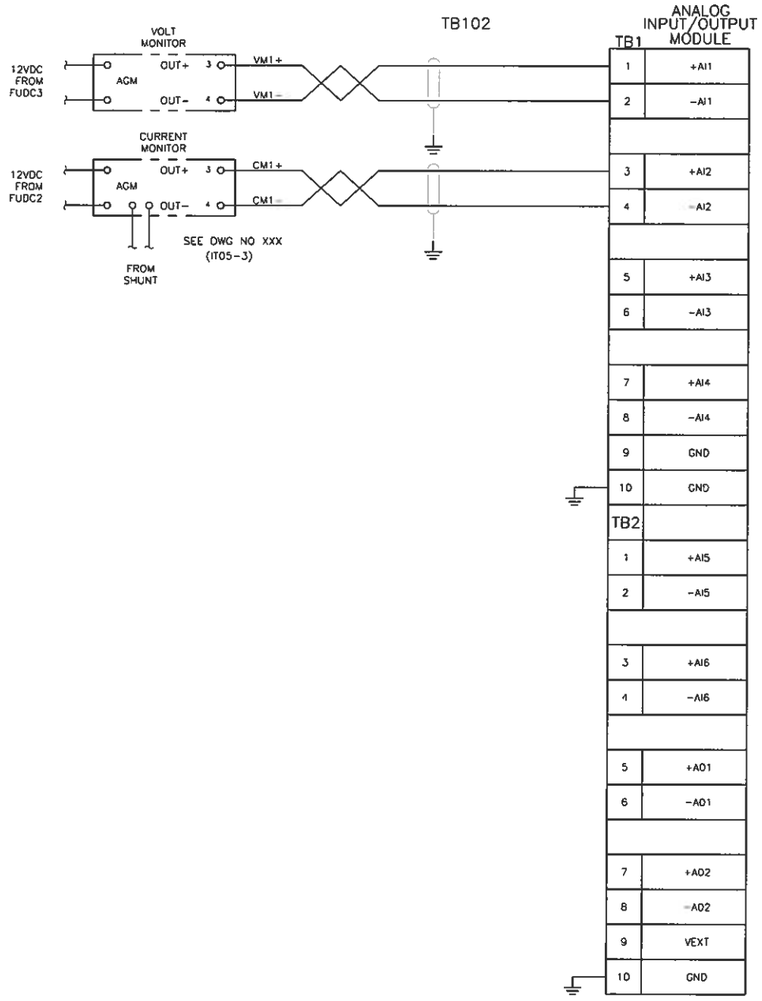

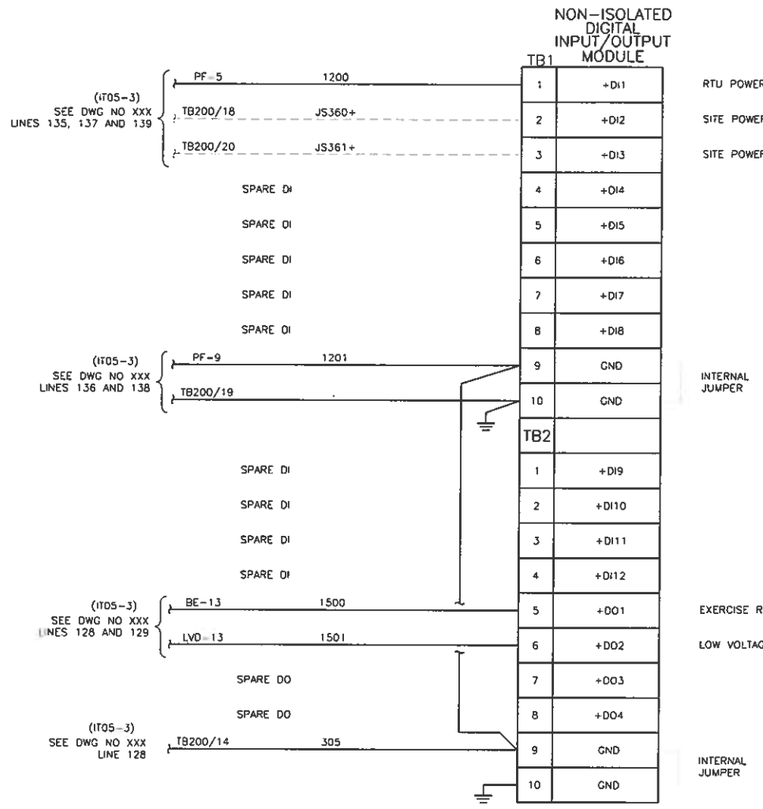

RTU CONTROL PANEL I/O WIRING DIAGRAM

NOT TO SCALE IT05-4 041907

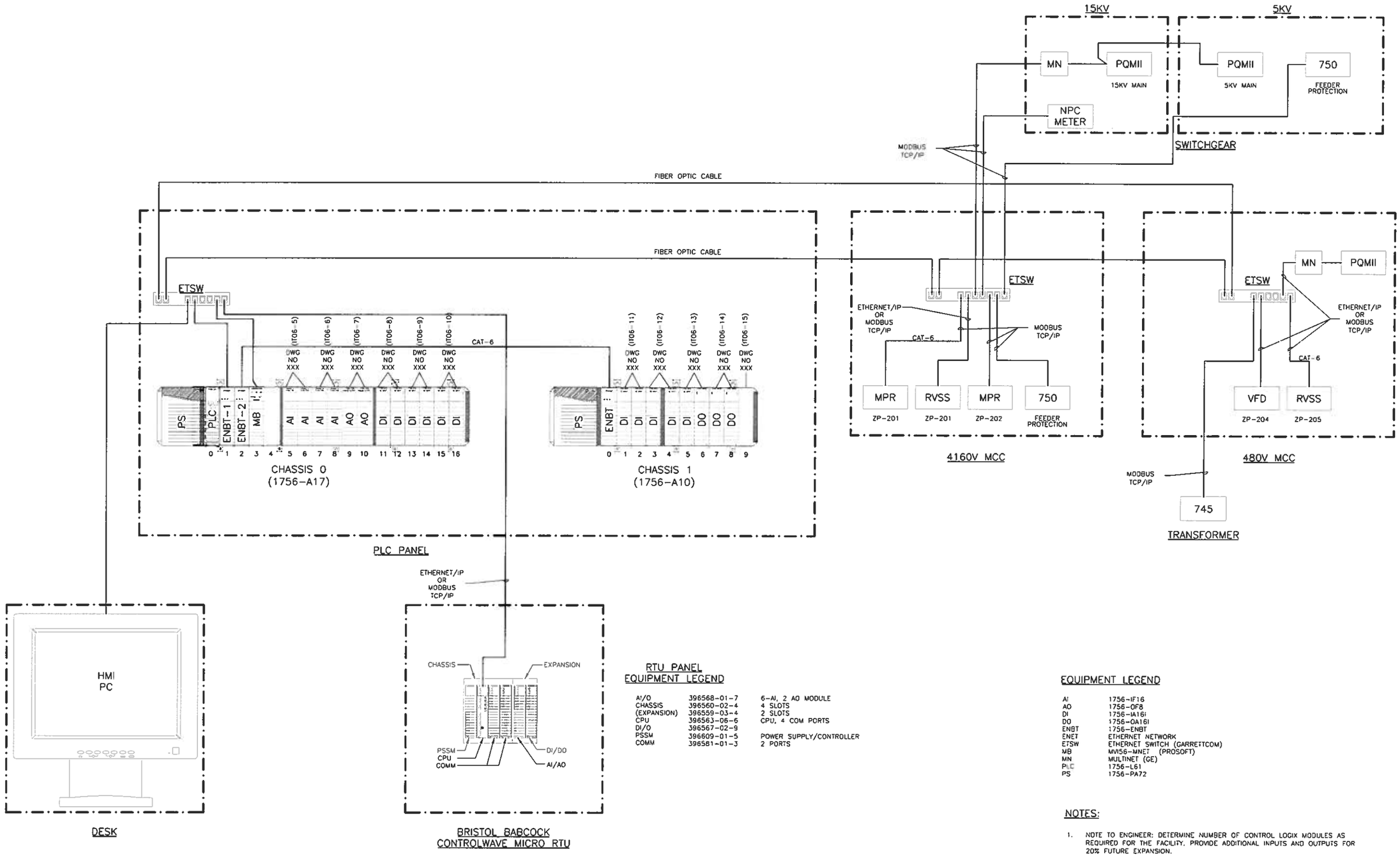

RTU PANEL EQUIPMENT LEGEND

AI/O	396568-01-7	6-AI, 2 AO MODULE
CHASSIS	396560-02-4	4 SLOTS
(EXPANSION)	396559-03-4	2 SLOTS
CPU	396563-06-6	CPU, 4 COM PORTS
DI/O	396567-02-9	
PSSM	396609-01-5	POWER SUPPLY/CONTROLLER
COMM	396581-01-3	2 PORTS

EQUIPMENT LEGEND

AI	1756-IF16
AO	1756-OF8
DI	1756-IA16I
DO	1756-OA16I
ENBT	1756-ENBT
ENET	ETHERNET NETWORK
ETSW	ETHERNET SWITCH (GARRETTCOM)
MB	MVI56-MNET (PROSOFT)
MN	MULTINET (GE)
PLC	1756-L61
PS	1756-PA72

NOTES:

1. NOTE TO ENGINEER: DETERMINE NUMBER OF CONTROL LOGIX MODULES AS REQUIRED FOR THE FACILITY. PROVIDE ADDITIONAL INPUTS AND OUTPUTS FOR 20% FUTURE EXPANSION.
2. NOTE TO ENGINEER: EQUIPMENT INCLUDING PLC'S, VFD'S, RVSS'S, POWER MONITORS, MULTILINS (MPR), SECURITY SYSTEM, RTU AND PLANT HMI SHALL BE CONNECTED IN A RING OR STAR NETWORK TOPOLOGY SIMILAR TO THE NETWORK SHOWN AND BASED ON THE FACILITY LAYOUT.
3. ENBT-1: PLC, HMI, VFD, RVSS
   ENBT-2: REMOTE I/O
   MB: RTU, 745, 750, PQMII, MPR

PLC SYSTEM NETWORK PROCESS AND INSTRUMENTATION DIAGRAM

NOT TO SCALE IT06-1 041907

EACH RUN OF CONDUIT WILL BE UTILIZED AS FOLLOWS:	
(1)	AC POWER TO PLC.
(2)	CONTACTS FROM MCC (AS REQUIRED)
(3)	ANALOG SIGNAL RUNS FROM DISCHARGE & SUCTION HEADER(S).
(4)	SPARE
(5)	POWER OR CONTROL
(6)	CONTROL CONDUCTORS CARRYING AC POWER.
(8)	ANALOG & DI RUNS FROM CL2 BUILDING.
(9)	POWER OR CONTROL
(10)	ANALOG AND D/I SIGNAL RUNS.
(11)	SPARE
(12)	ANALOG AND D/I SIGNAL RUNS.
(13)	TELCO ENTRY CABLE.
(14)	ANALOG AND D/I SIGNAL RUNS.
(15)	ANALOG AND D/I SIGNAL RUNS.

* PAD TO MATCH ENCLOSURE MANUFACTURERS REQUIREMENTS.

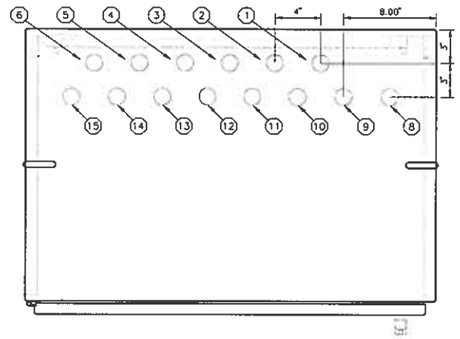

BOTTOM VIEW

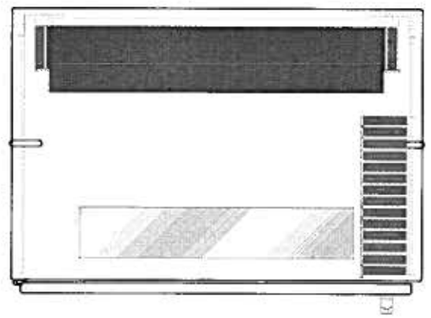

TOP VIEW

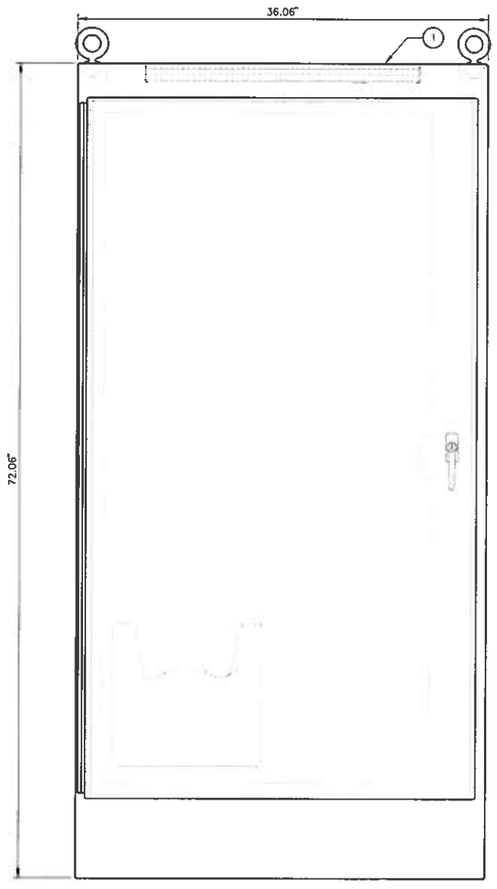

FRONT VIEW

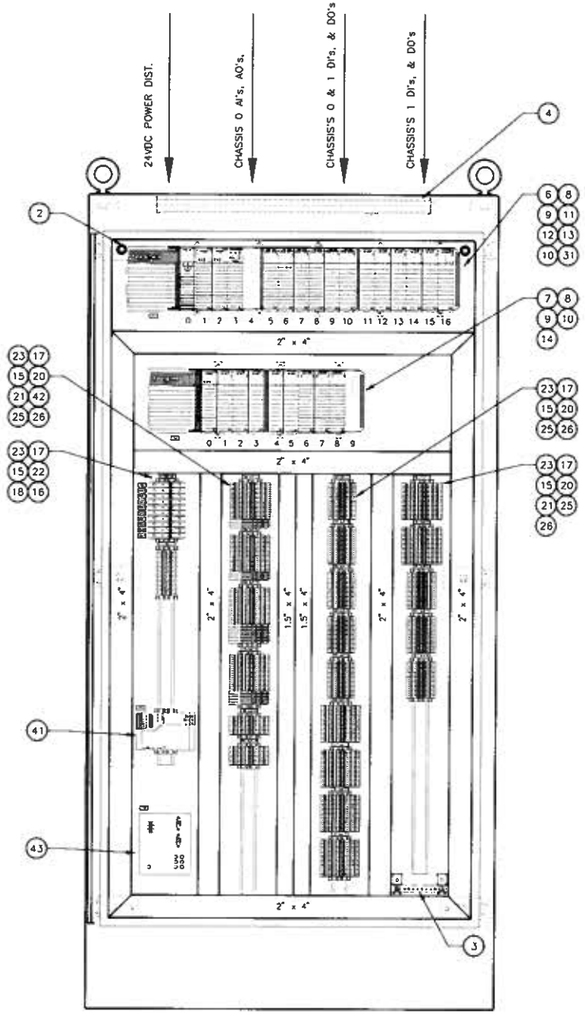

FRONT VIEW WITH DOOR REMOVED

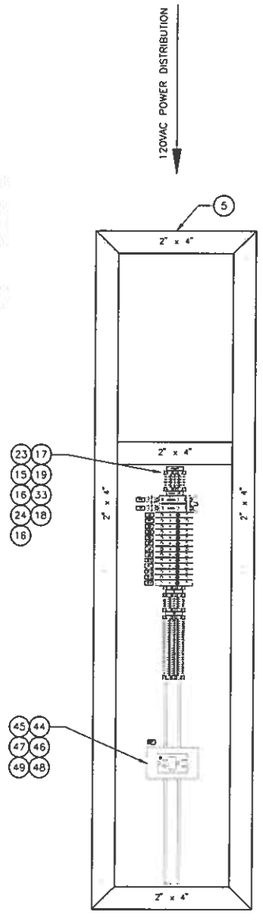

SIDE PANEL VIEW

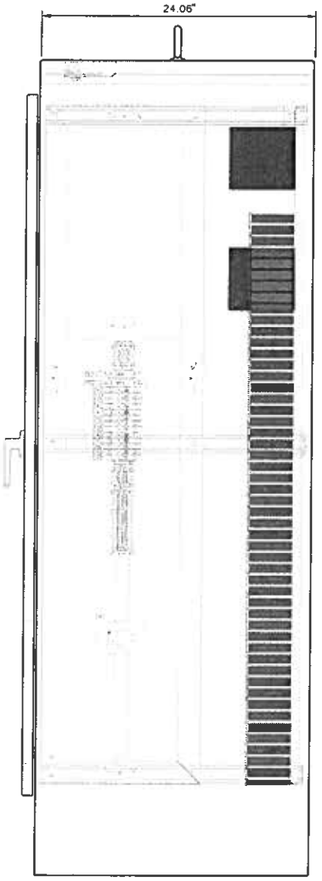

SIDE VIEW

NOTES:

1. NOTE TO ENGINEER: ADD I/O MODULES, LARGER CHASSIS AND/OR LARGER CABINET AS REQUIRED FOR NUMBER OF ZONE PUMPS IN THE FACILITY. IF THE FACILITY HAS MORE THAN 8 ZONE PUMPS, ADD A SECOND CONTROL CABINET.

PLC CONTROL PANEL LAYOUT

NOT TO SCALE IT06-2 041807

PLC CONTROL PANEL BILL OF MATERIALS

ITEM	MANUF.	PART#	DESCRIPTION	QTY
1	HOFFMAN	A-723624FS	NEMA 12 ENCLOSURE, 72" x 36" x 24"	1
2	HOFFMAN	A-72P36F1	SUB PANEL, 60" x 32"	1
3	HOFFMAN	X-GS2K,MS	GROUNDING BAR, WITH A-GLK2 MOUNTING KIT	1
4	HOFFMAN	ALF16M24R	24" FLUORESCENT LIGHT PACKAGE	1
5	HOFFMAN	A-72SMP14	SIDE PANEL, 60" X 14"	1
6	ALLEN-BRADLEY	1756-A17	CHASSIS, 17 SLOT	1
7	ALLEN-BRADLEY	1756-A10	CHASSIS, 10 SLOT	1
8	ALLEN-BRADLEY	1756-PB75	120VAC POWER SUPPLY, 95W	2
9	ALLEN-BRADLEY	1756-ENBT	SINGLE PORT ETHERNET BRIDGE	2
10	ALLEN-BRADLEY	1756-IA16I	120VAC ISOLATED INPUT MODULE, 16 INPUTS	11
11	ALLEN-BRADLEY	1756-IF16	ANALOG INPUT MODULE, 16 SINGLE-ENDED/ 4-20mA INPUTS	4
12	ALLEN-BRADLEY	1756-L61	LOGIX6x PROCESSOR WITH 2.0 Mbyte MEMORY W/COMPACT FLASH CARD	1
13	ALLEN-BRADLEY	1756-OF8	ANALOG OUTPUT MODULE, 8 OUTPUTS, 4-20mA	2
14	ALLEN-BRADLEY	1756-OA16I	ISOLATED OUTPUT MODULE, 16 OUTPUTS	3
15	ALLEN-BRADLEY	1492-EA35	END ANCHOR	A/R
16	ALLEN-BRADLEY	1492-EB3	END BARRIER FOR: "W3", "W4" TERMINALS	A/R
17	ALLEN-BRADLEY	1492-GM35	TERMINAL GROUP MARKER	A/R
18	ALLEN-BRADLEY	1492-W3	TERMINAL BLOCK, 20A (GREY)	A/R
19	ALLEN-BRADLEY	1492-W4	TERMINAL BLOCK, 30A (GREY)	A/R
20	ALLEN-BRADLEY	1492-WTF3	3-TIER TERMINAL BLOCK, 20A (GREY)	A/R
21	ALLEN-BRADLEY	1492-EBTF3	END BARRIER FOR 3-TIER TERMINAL BLOCK	A/R
22	ALLEN-BRADLEY	1492-GH010	CIRCUIT BREAKER, SINGLE POLE, 1AMP	A/R
23	ALLEN-BRADLEY	1492-DR6	DIN RAIL, HI-RISE	A/R
24	ALLEN-BRADLEY	1492-GH020	CIRCUIT BREAKER, SINGLE POLE, 2AMP	13
25	ALLEN-BRADLEY	1492-W03	2-TIER TERMINAL BLOCK, 20A (GREY)	A/R
26	ALLEN-BRADLEY	1492-EB03	END BARRIER FOR 2-TIER TERMINAL BLOCK	A/R
27	ALLEN-BRADLEY	1492-CABLE010TBCH	PREWIRED CABLE FOR 16 POINT ISOLATED I/O MODULES	A/R
28	ALLEN-BRADLEY	1492-ACABLE010UB	PREWIRED CABLE FOR 1756 ANALOG INPUT MODULES	A/R
29	ALLEN-BRADLEY	1492-ACABLE010WB	PREWIRED CABLE FOR 1756 ANALOG OUTPUT MODULES	A/R
30				
31	PROSOFT	MVI56-MNET	MODBUS TCP/IP COMMUNICATION MODULE	1
32				
33	SQUARE-D	QOU1-120	CIRCUIT BREAKER, SINGLE POLE, 20AMP	2
34				
35				
36				
37	PANDUIT	C1.5X4DG6	WIRE DUCT, 1.5" X 4"	A/R
38	PANDUIT	C3DG6	WIRE DUCT COVER, 3"	A/R
39	PANDUIT	C2X4DG6	WIRE DUCT, 2" X 4"	A/R
40	PANDUIT	C2DG6	WIRE DUCT COVER, 2"	A/R
41	PHOENIX-CONTACT	29 38 604	QUINT-PS-100-240AC/24DC/10	1
42	PHOENIX-CONTACT	28 64 419	MINI MCR-SL-1CP-I-I, SIGNAL ISOLATOR	14
43	GARRETTCOM	6K FAMILY	ETHERNET SWITCH, 120VAC, NO. AND TYPE OF PORTS AS REQ'D	1
44	HUBBELL	HPS1I	DUPLEX RECEPTACLE COVER PLATE, IVORY	1
45	HUBBELL	GF8200IA	RECEPTACLE, 15 AMP, DUPLEX , GFCI	1
46	APPLETON	CN-50	NIPPLE, 1/2"	1
47	APPLETON	BL50	LOCK NUT, 1/2"	1
48	APPLETON	BBU50H	PLASTIC BUSHING, 1/2"	1
49	T&B	8660	STEEL, 4" x 2-1/8" x 1-7/8"	1
50				
51				
52				
53				
54				
55				

IT06-3 041807

NOTES:

1. NOTE TO ENGINEER: BILL OF MATERIALS IS FOR EXAMPLE ONLY. PROVIDE NUMBER OF COMPONENTS AND PANEL SIZED TO MEET PROJECT REQUIREMENTS

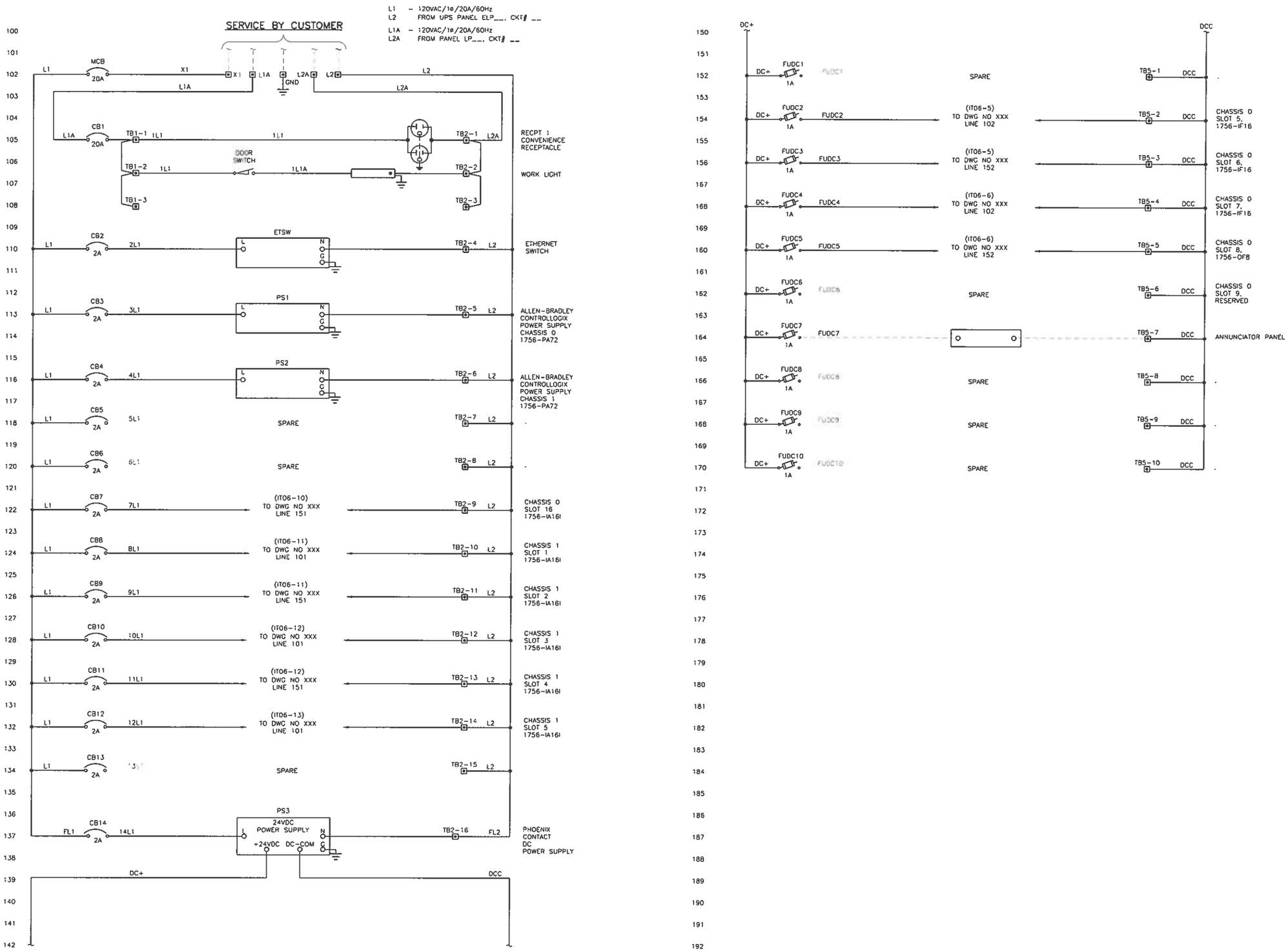

PLC CONTROL PANEL POWER DISTRIBUTION
PROCESS AND INSTRUMENTATION DIAGRAM

NOT TO SCALE

IT06-4 041907

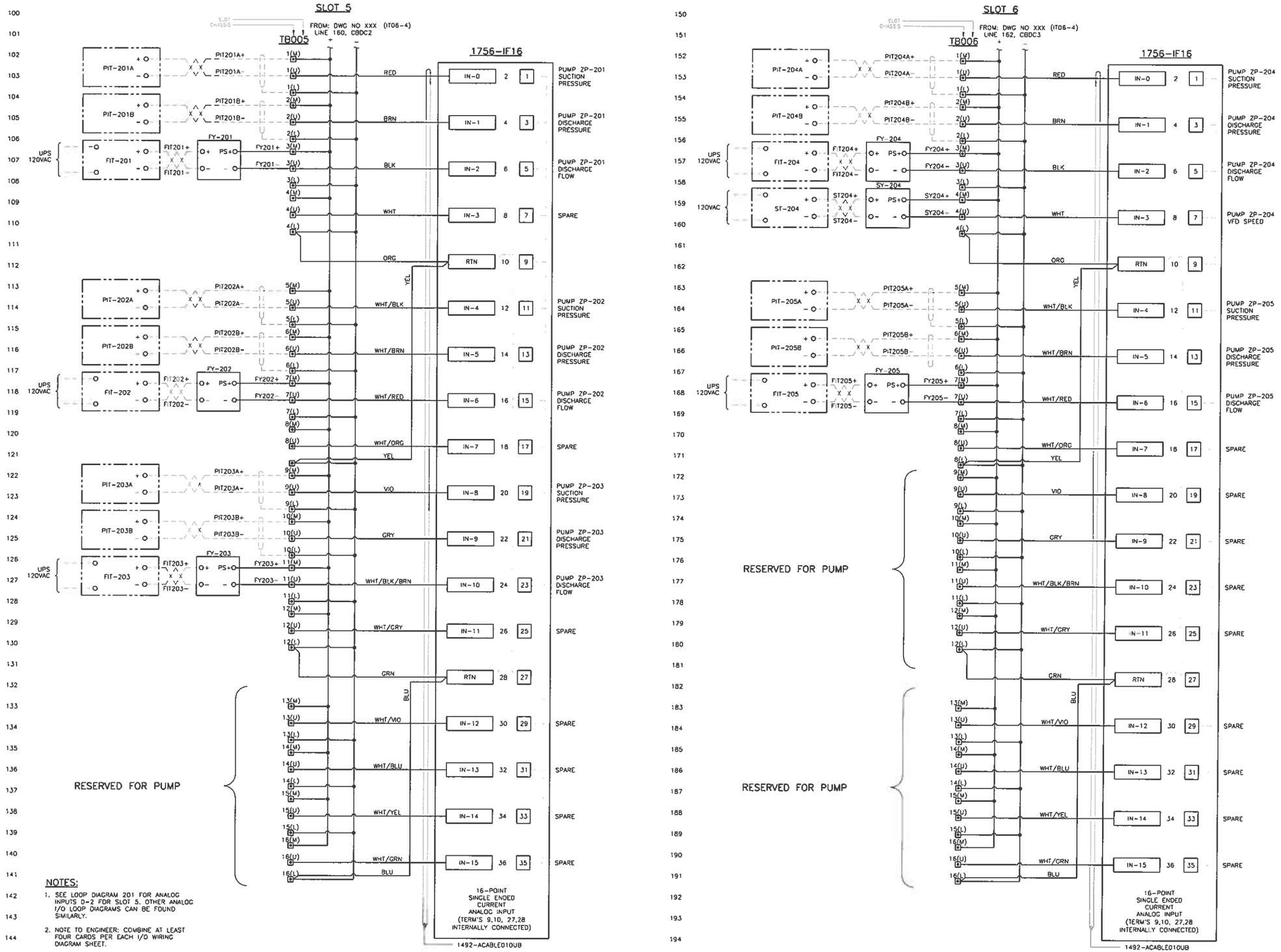

PLC I/O WIRING DIAGRAM
CHASSIS 0, SLOTS 5 AND 6

NOT TO SCALE IT06-5 041907

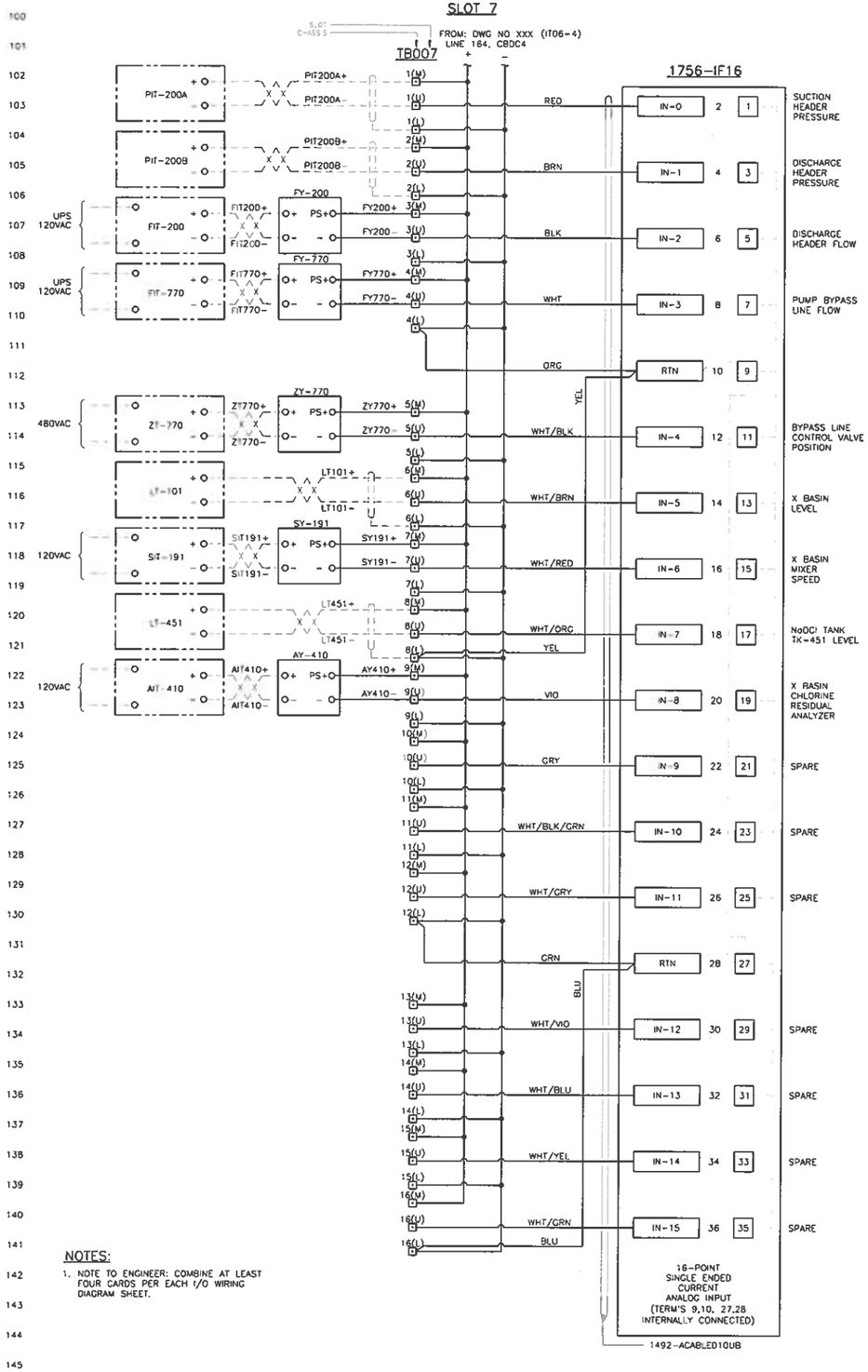

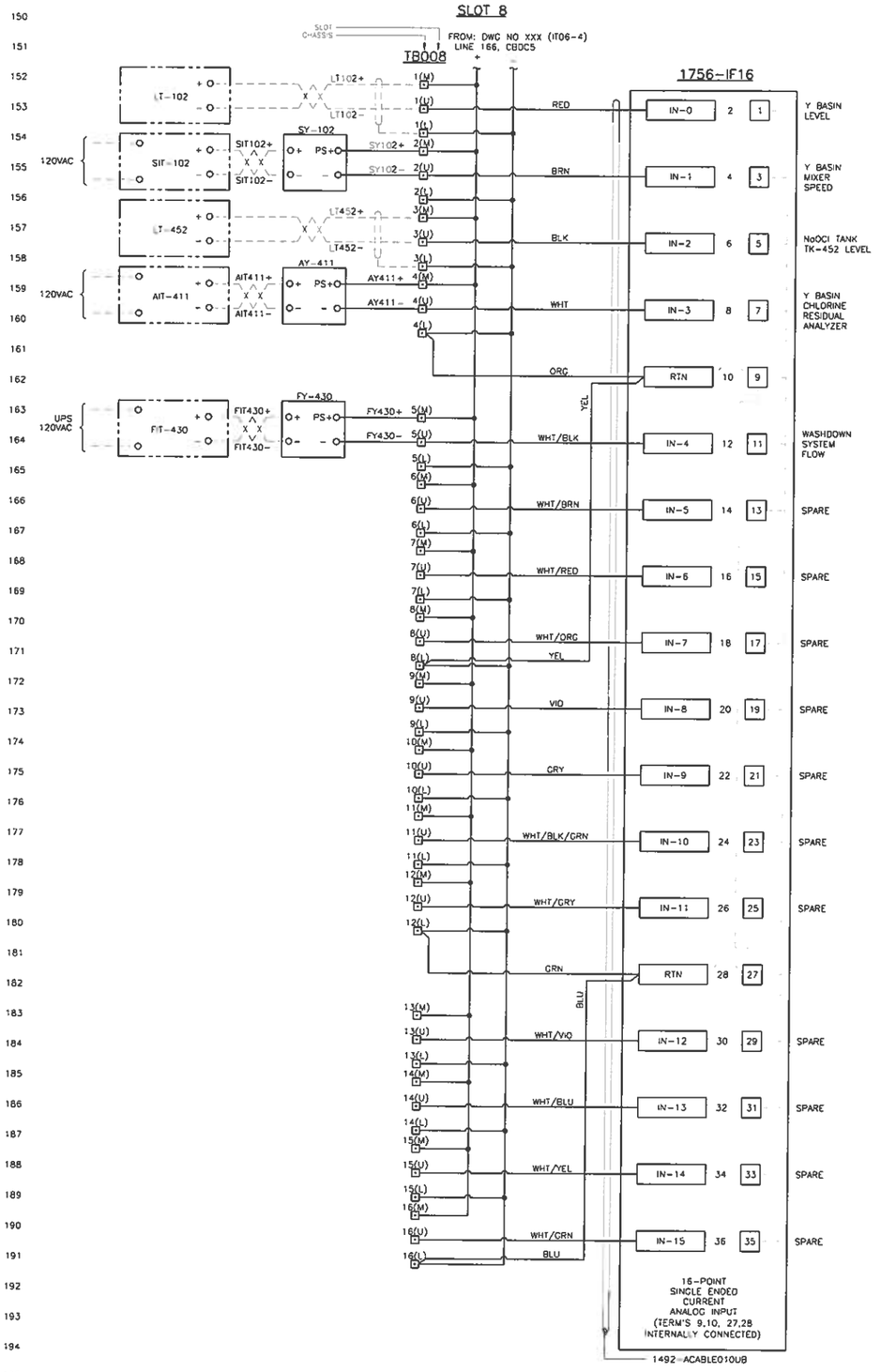

NOTES:

1. NOTE TO ENGINEER: COMBINE AT LEAST FOUR CARDS PER EACH I/O WIRING DIAGRAM SHEET.

PLC I/O WIRING DIAGRAM
CHASSIS 0, SLOTS 7 AND 8

NOT TO SCALE IT06-6 041907

SLOT 9

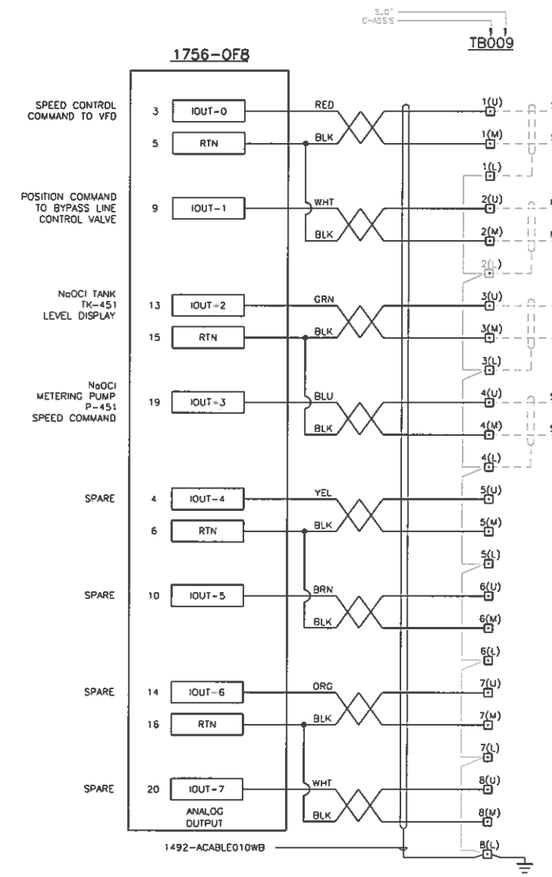

NOTES:

1. NOTE TO ENGINEER: COMBINE AT LEAST FOUR CARDS PER EACH I/O WIRING DIAGRAM SHEET.

SLOT 10

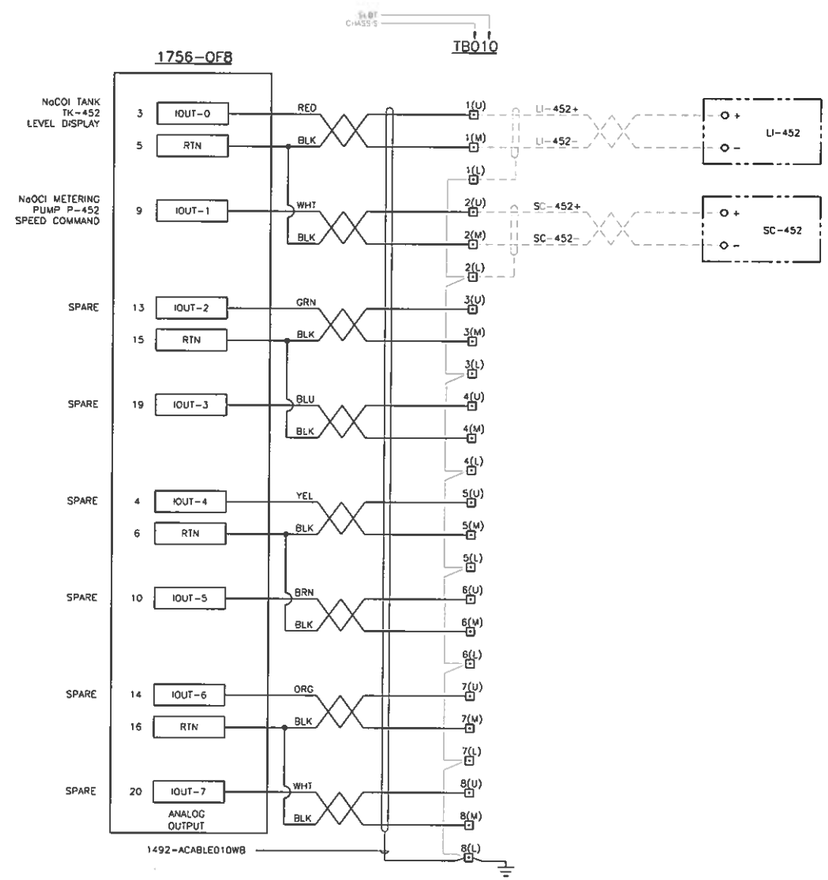

PLC I/O WIRING DIAGRAM
CHASSIS 0, SLOTS 9 AND 10

NOT TO SCALE IT06-7 041807

SLOT 11

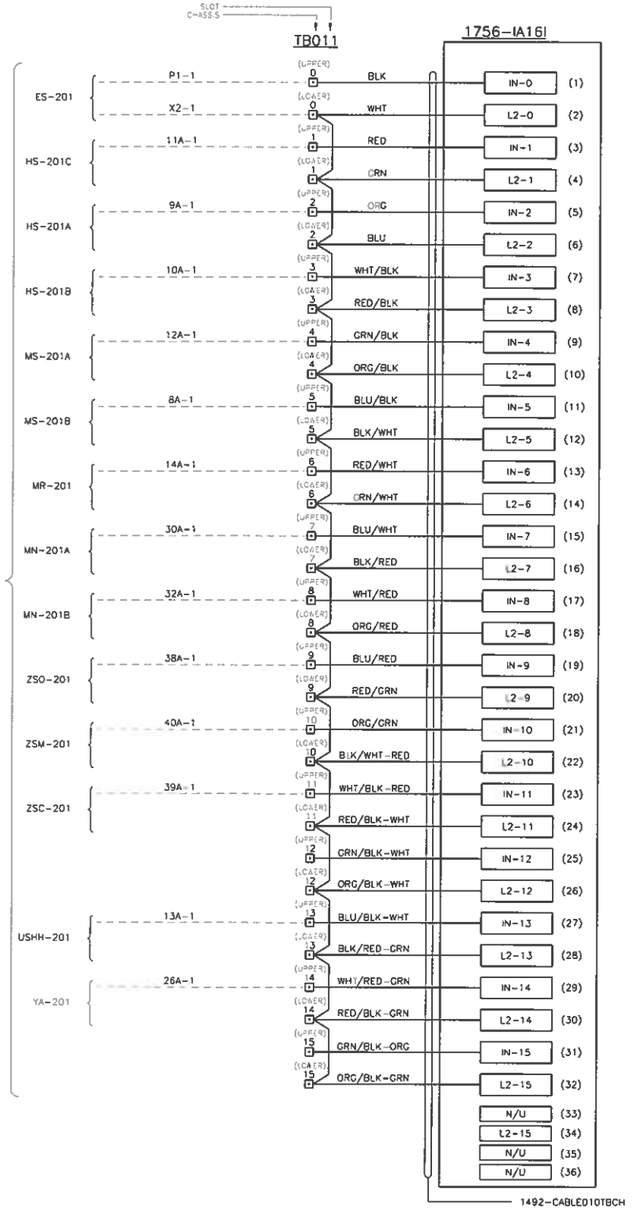

PUMP ZP-201 MOTOR STARTER POWER FAILURE

PUMP ZP-201 PLC MODE

PUMP ZP-201 IN HAND MODE

PUMP ZP-201 IN AUTO MODE

PUMP ZP-201 START PUSHBUTTON ON MCC

PUMP ZP-201 STOP PUSHBUTTON ON MCC

PUMP ZP-201 RESET PUSHBUTTON ON MCC

PUMP ZP-201 RUNNING

PUMP ZP-201 STOPPED

PUMP ZP-201 DISCHARGE VALVE OPENED

PUMP ZP-201 DISCHARGE VALVE 95% CLOSED

PUMP ZP-201 DISCHARGE VALVE CLOSED

SPARE

PUMP ZP-201 MPR TRIPPED

PUMP ZP-201 RVSS DRIVE FAULT

SPARE

NOTES:

1. SEE LOOP DIAGRAM 201 FOR DISCRETE INPUTS TO SLOT 11. OTHER DISCRETE I/O POINT LOOP DIAGRAMS CAN BE FOUND SIMILARLY.
2. NOTE TO ENGINEER: COMBINE AT LEAST FOUR CARDS PER EACH I/O WIRING DIAGRAM SHEET.

SLOT 12

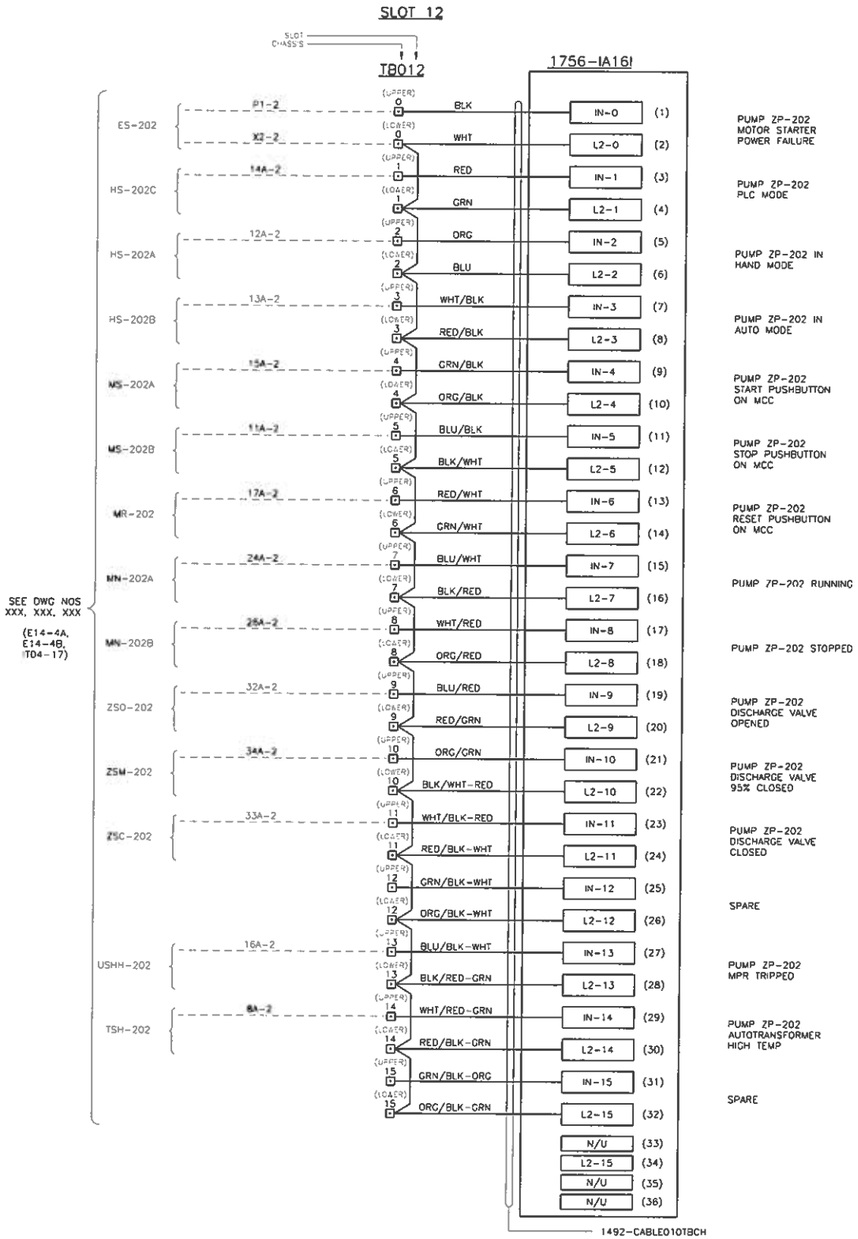

PUMP ZP-202 MOTOR STARTER POWER FAILURE

PUMP ZP-202 PLC MODE

PUMP ZP-202 IN HAND MODE

PUMP ZP-202 IN AUTO MODE

PUMP ZP-202 START PUSHBUTTON ON MCC

PUMP ZP-202 STOP PUSHBUTTON ON MCC

PUMP ZP-202 RESET PUSHBUTTON ON MCC

PUMP ZP-202 RUNNING

PUMP ZP-202 STOPPED

PUMP ZP-202 DISCHARGE VALVE OPENED

PUMP ZP-202 DISCHARGE VALVE 95% CLOSED

PUMP ZP-202 DISCHARGE VALVE CLOSED

SPARE

PUMP ZP-202 MPR TRIPPED

PUMP ZP-202 AUTOTRANSFORMER HIGH TEMP

SPARE

PLC I/O WIRING DIAGRAM
CHASSIS 0, SLOTS 11 AND 12

NOT TO SCALE ITO6-B 041907

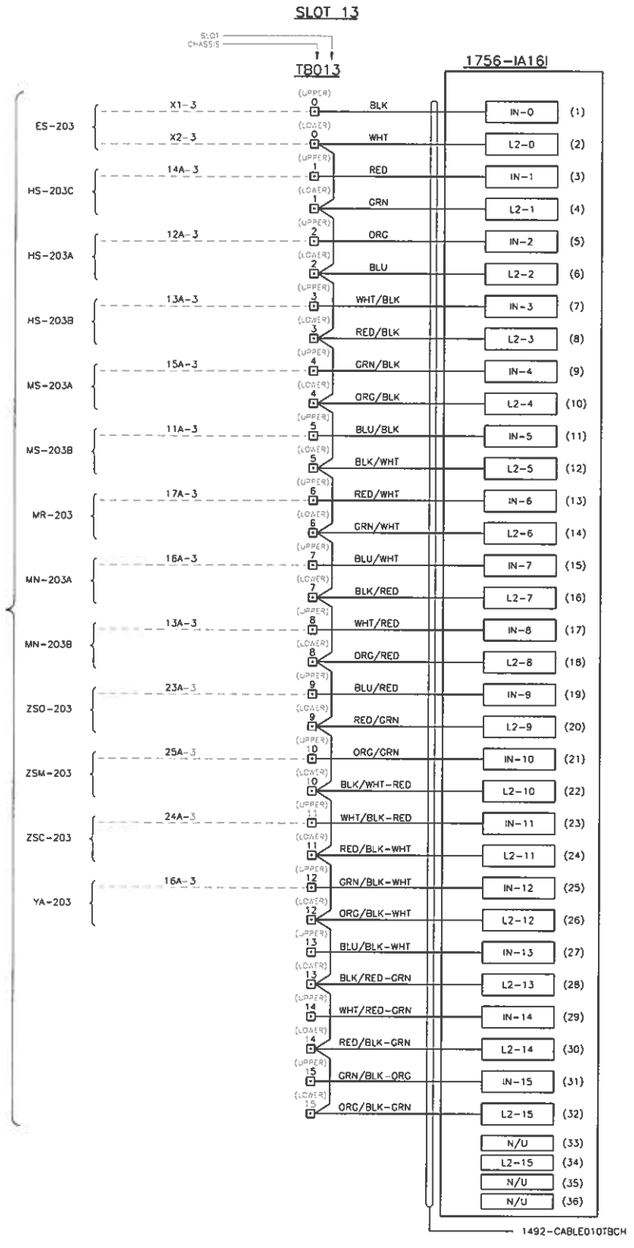

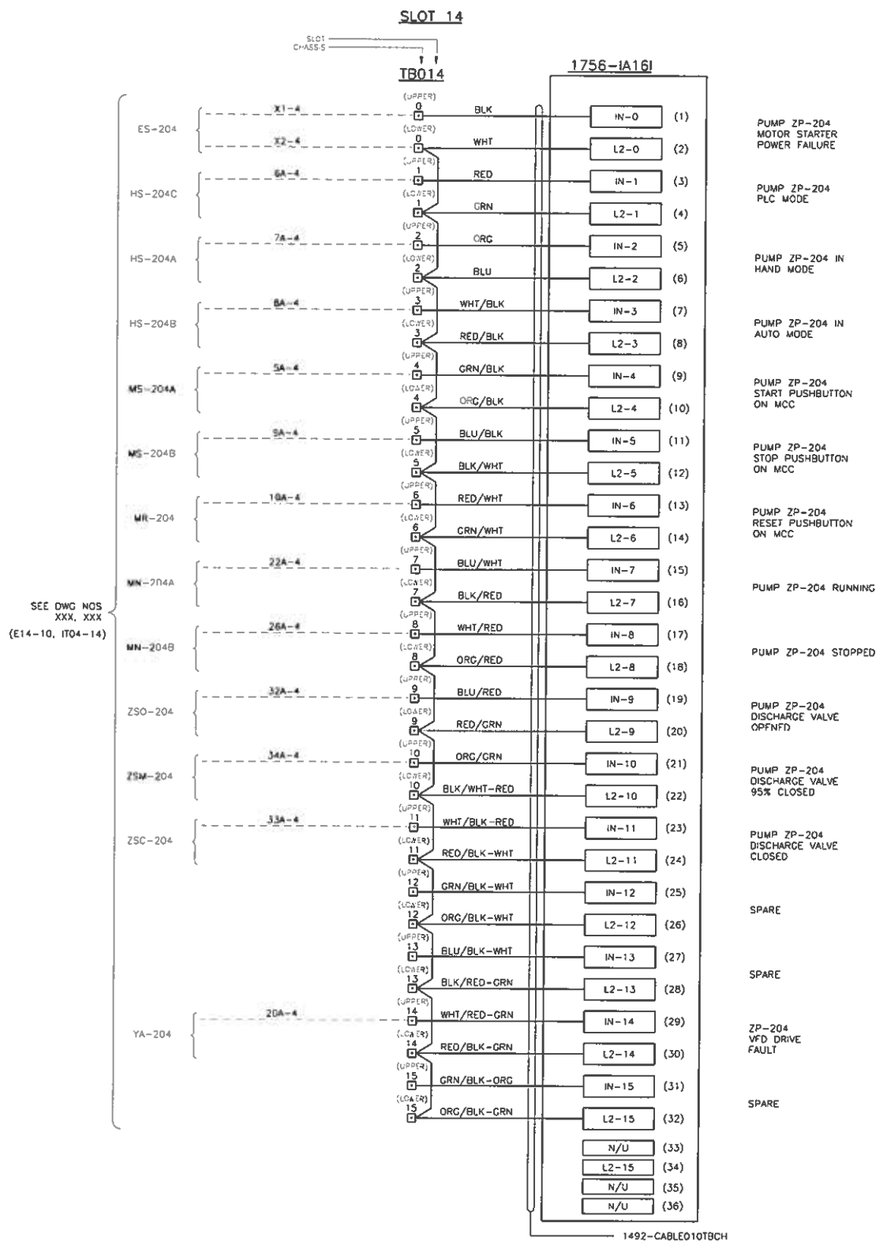

NOTE:

1. NOTE TO ENGINEER: COMBINE AT LEAST FOUR CARDS PER EACH I/O WIRING DIAGRAM SHEET.

PLC I/O WIRING DIAGRAM
CHASSIS 0, SLOTS 13 AND 14

NOT TO SCALE IT06-9 041907

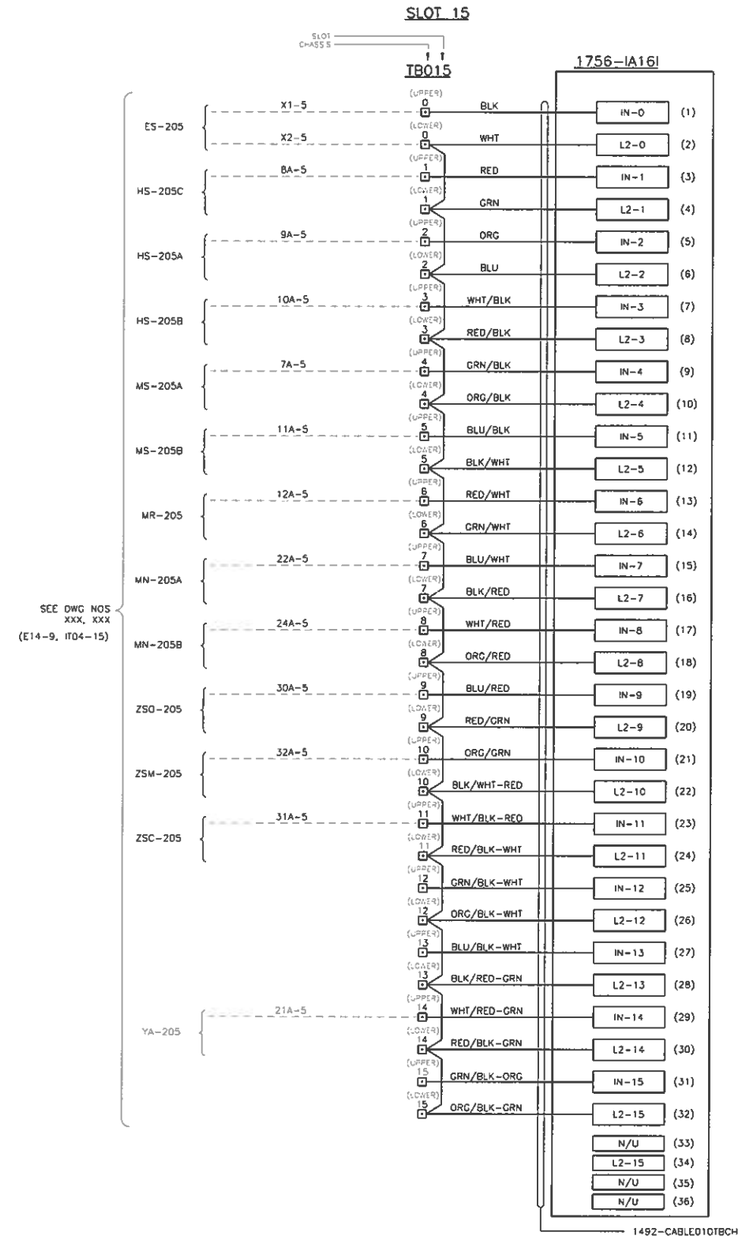

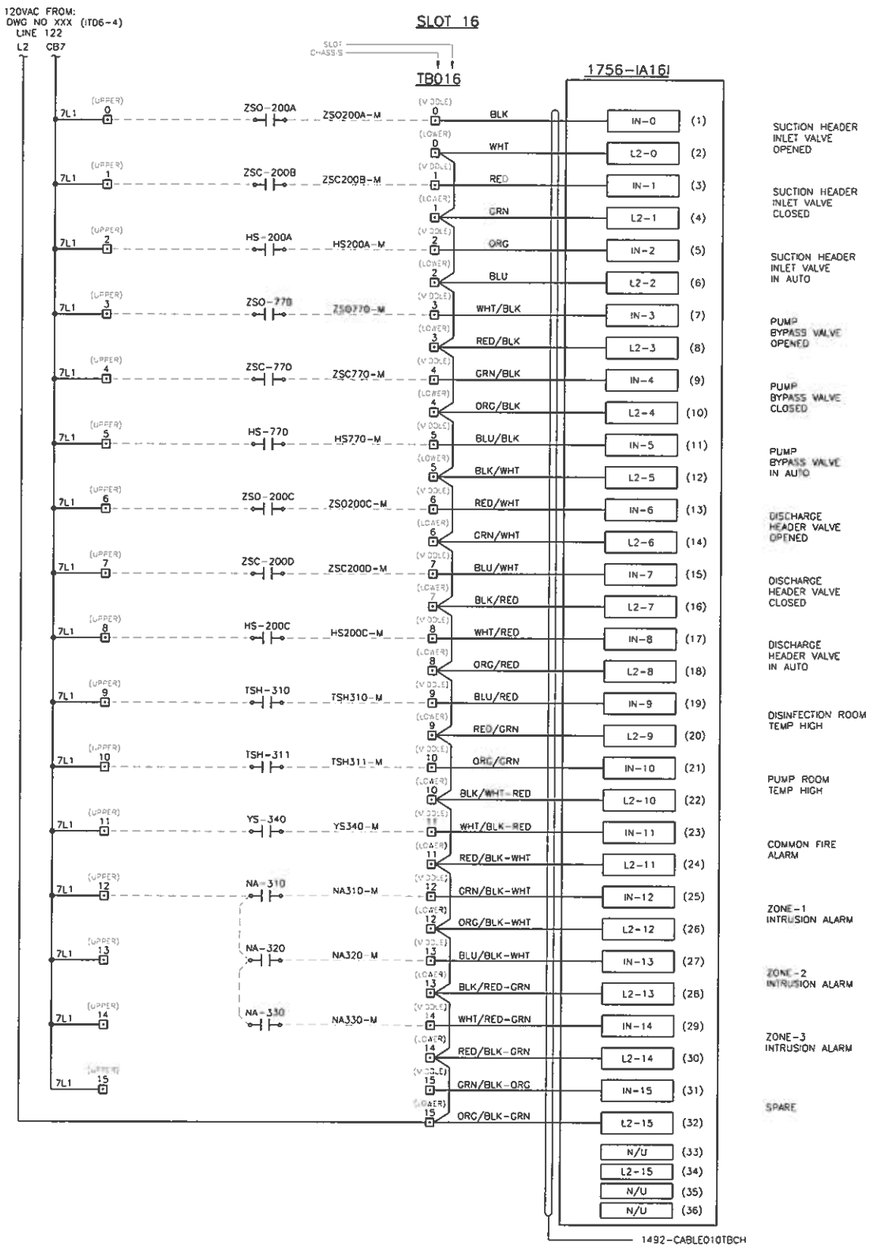

NOTES:

1. NOTE TO ENGINEER: COMBINE AT LEAST FOUR CARDS PER EACH I/O WIRING DIAGRAM SHEET.

PLC I/O WIRING DIAGRAM
CHASSIS 0, SLOTS 15 AND 16

NOT TO SCALE IT06-10 041907

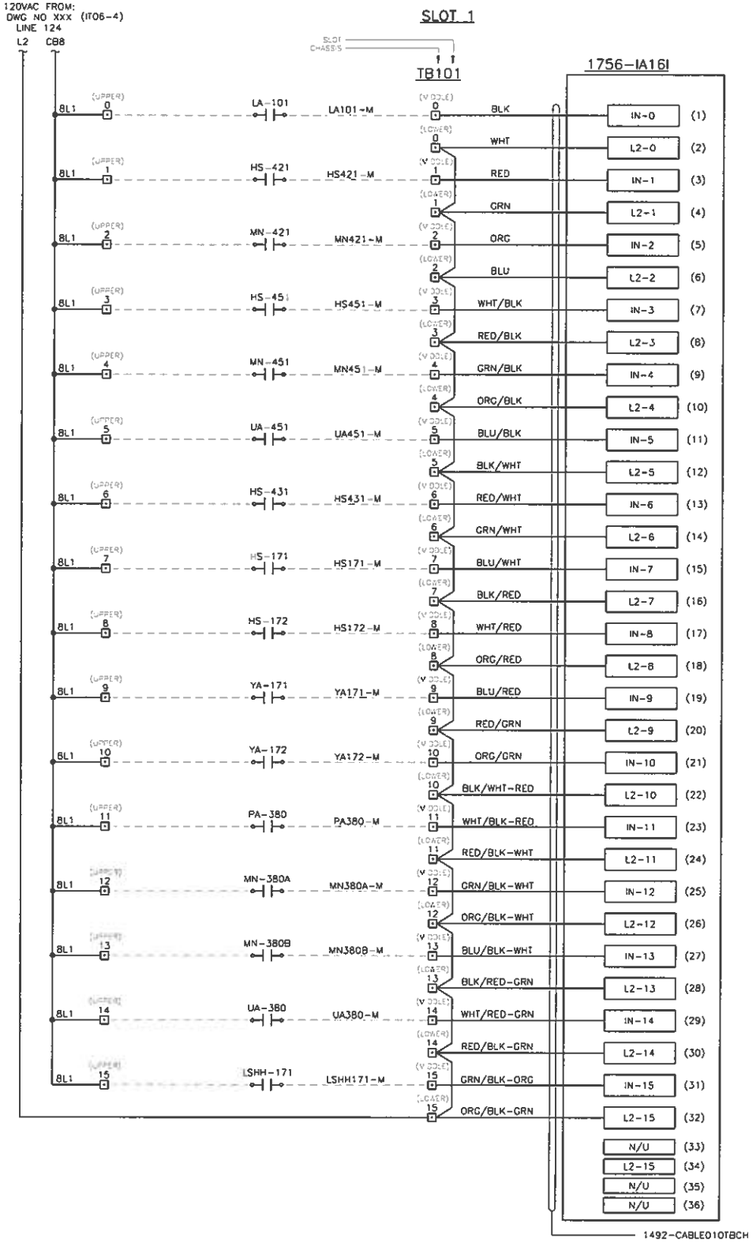

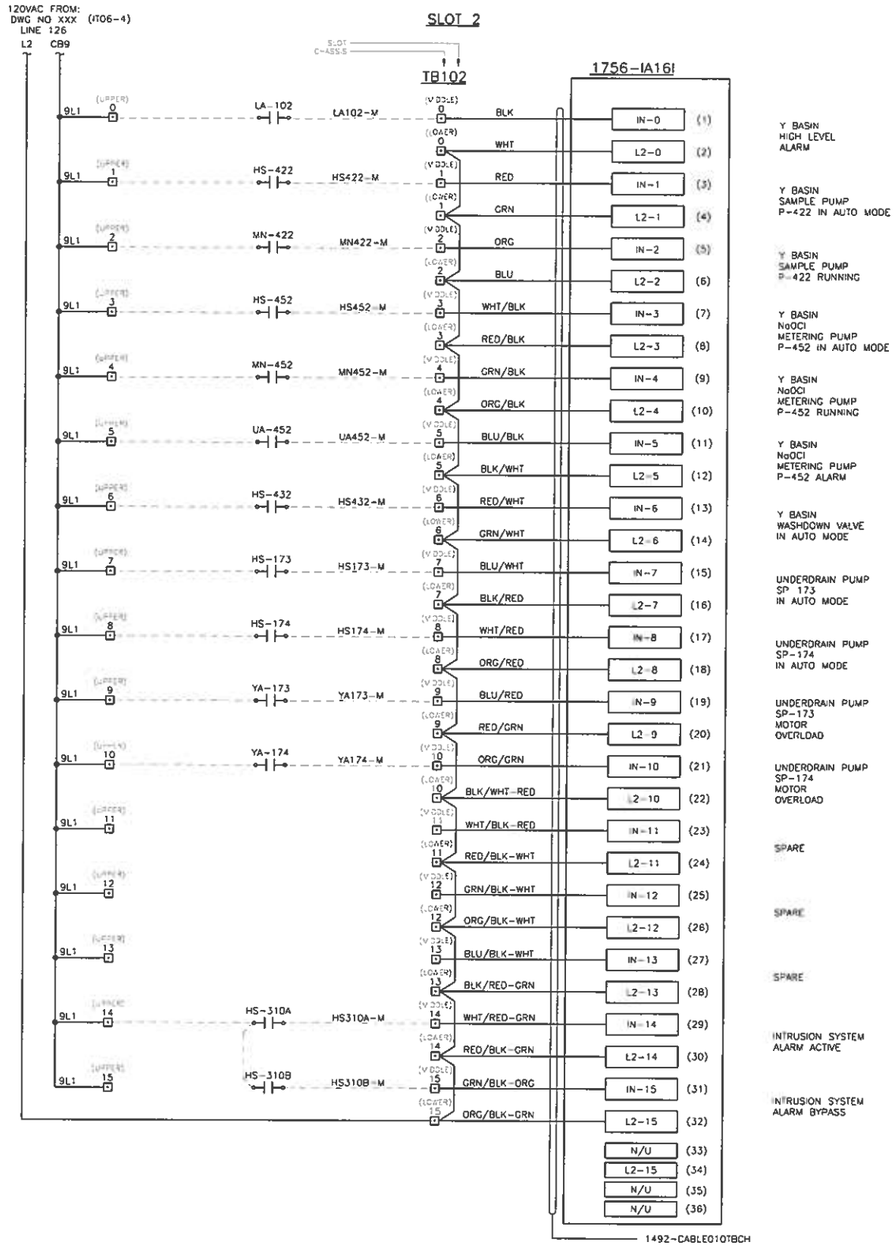

NOTES:

1. NOTE TO ENGINEER: COMBINE AT LEAST FOUR CARDS PER EACH I/O WIRING DIAGRAM SHEET.

PLC I/O WIRING DIAGRAM
CHASSIS 1, SLOTS 1 AND 2

NOT TO SCALE IT06-11 041907

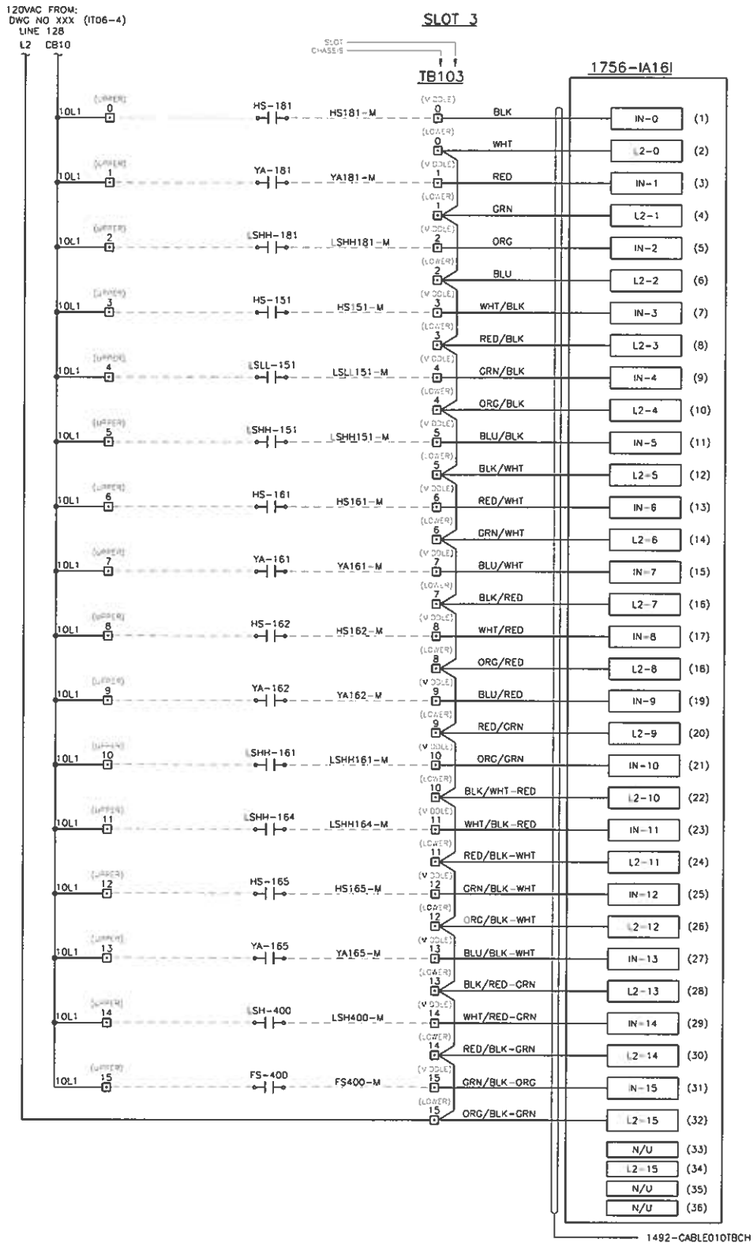

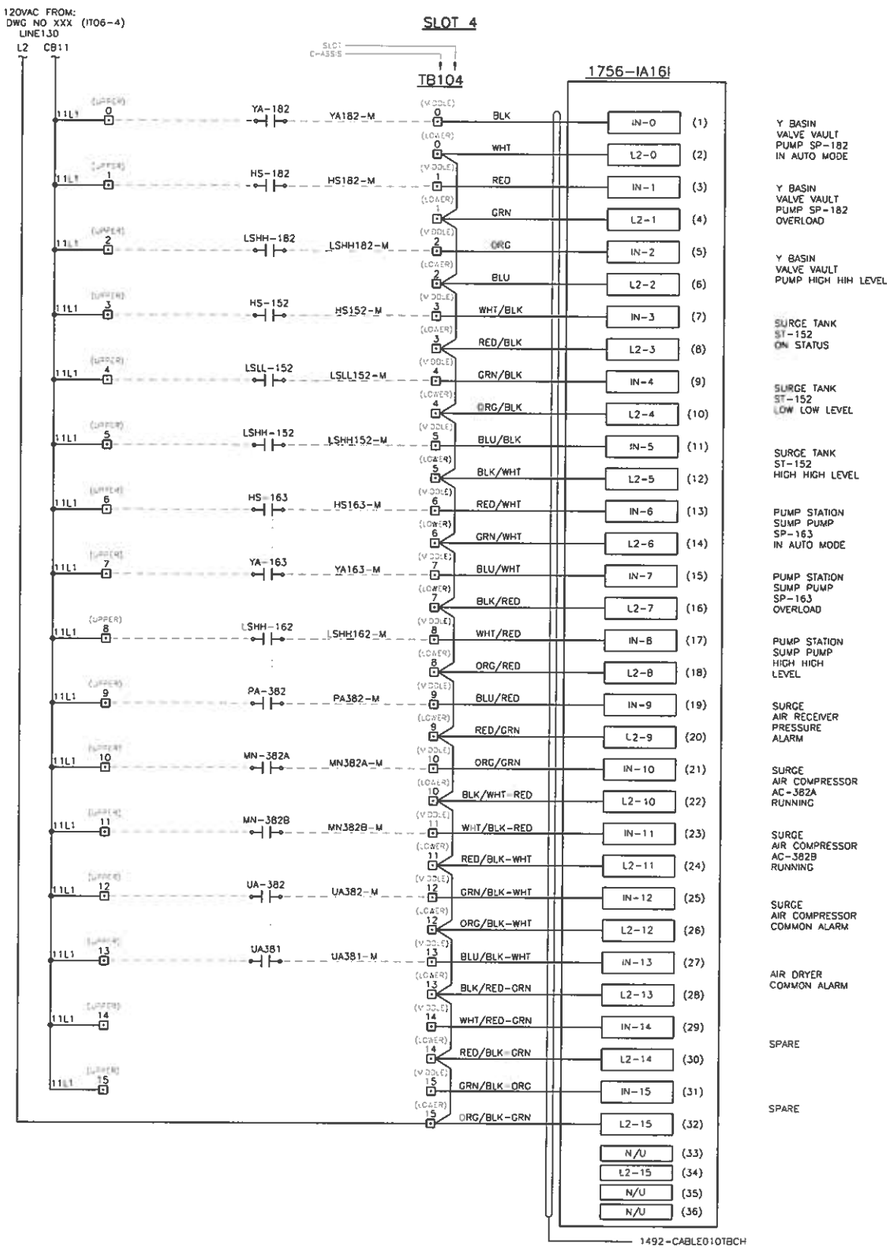

NOTES:

1. NOTE TO ENGINEER: COMBINE AT LEAST FOUR CARDS PER EACH I/O WIRING DIAGRAM SHEET.

PLC I/O WIRING DIAGRAM
CHASSIS 1, SLOTS 3 AND 4

NOT TO SCALE IT06-12 041907

SLOT 5

120VAC FROM:
DWG NO XXX (1106-4)
LINE 132
L2 CB12

SLOT CHASSIS → TB105

1756-IA16I

12L1	0	ZSC-360	ZSC360-M	0 (V MODULE)	BLK	IN-0 (1)
				0 (LOWER)	WHT	L2-0 (2)
12L1	1	ZSC-363	ZSC363-M	1 (V MODULE)	RED	IN-1 (3)
				1 (LOWER)	GRN	L2-1 (4)
12L1	2	YA-363	YA363-M	2 (V MODULE)	ORG	IN-2 (5)
				2 (LOWER)	BLU	L2-2 (6)
12L1	3	YS-363	YS363-M	3 (V MODULE)	WHT/BLK	IN-3 (7)
				3 (LOWER)	RED/BLK	L2-3 (8)
12L1	4	LSL-360	LSL360-M	4 (V MODULE)	GRN/BLK	IN-4 (9)
				4 (LOWER)	ORG/BLK	L2-4 (10)
12L1	5	TSH-360	TSH360-M	5 (V MODULE)	BLU/BLK	IN-5 (11)
				5 (LOWER)	BLK/WHT	L2-5 (12)
12L1	6	PSH-360	PSH360-M	6 (V MODULE)	RED/WHT	IN-6 (13)
				6 (LOWER)	GRN/WHT	L2-6 (14)
12L1	7	JS-360	JS360-M	7 (V MODULE)	BLU/WHT	IN-7 (15)
				7 (LOWER)	BLK/RED	L2-7 (16)
12L1	8	JS-361	JS361-M	8 (V MODULE)	WHT/RED	IN-8 (17)
				8 (LOWER)	ORG/RED	L2-8 (18)
12L1	9	JS-362	JS362-M	9 (V MODULE)	BLU/RED	IN-9 (19)
				9 (LOWER)	RED/GRN	L2-9 (20)
12L1	10			10 (V MODULE)	ORG/GRN	IN-10 (21)
				10 (LOWER)	BLK/WHT-RED	L2-10 (22)
12L1	11			11 (V MODULE)	WHT/BLK-RED	IN-11 (23)
				11 (LOWER)	RED/BLK-WHT	L2-11 (24)
12L1	12			12 (V MODULE)	GRN/BLK-WHT	IN-12 (25)
				12 (LOWER)	ORG/BLK-WHT	L2-12 (26)
12L1	13			13 (V MODULE)	BLU/BLK-WHT	IN-13 (27)
				13 (LOWER)	BLK/RED-GRN	L2-13 (28)
12L1	14			14 (V MODULE)	WHT/RED-GRN	IN-14 (29)
				14 (LOWER)	RED/BLK-GRN	L2-14 (30)
12L1	15			15 (V MODULE)	GRN/BLK-ORG	IN-15 (31)
				15 (LOWER)	ORG/BLK-GRN	L2-15 (32)
						N/U (33)
						L2-15 (34)
						N/U (35)
						N/U (36)

BLK	TRANSFER SWITCH NORMAL SOURCE
WHT	
RED	TRANSFER SWITCH EMERGENCY SOURCE
GRN	
ORG	GENERATOR COMMON ALARM
BLU	
WHT/BLK	GENERATOR RUNNING
RED/BLK	
GRN/BLK	TRANSFORMER T-1 LOW LEVEL ALARM
ORG/BLK	
BLU/BLK	TRANSFORMER T-1 HIGH TEMPERATURE ALARM
BLK/WHT	
RED/WHT	TRANSFORMER T-1 PRESSURE RELIEF ALARM
GRN/WHT	
BLU/WHT	SITE 15KV POWER FAILURE
BLK/RED	
WHT/RED	SITE 5KV POWER FAILURE
ORG/RED	
BLU/RED	TRANSFORMER T-1 SR-745 TRIPPED
RED/GRN	
ORG/GRN	SPARE
BLK/WHT-RED	
WHT/BLK-RED	SPARE
RED/BLK-WHT	
GRN/BLK-WHT	SPARE
ORG/BLK-WHT	
BLU/BLK-WHT	SPARE
BLK/RED-GRN	
WHT/RED-GRN	SPARE
RED/BLK-GRN	
GRN/BLK-ORG	SPARE
ORG/BLK-GRN	

1492-CABLE010TBCH

NOTES:
1. NOTE TO ENGINEER: COMBINE AT LEAST FOUR CARDS PER EACH I/O WIRING DIAGRAM SHEET.

SLOT 6

SLOT CHASSIS → TB106

1756-OA16I

PUMP ZP-201 RUN COMMAND	1	OUT-0	BLK	0 (UPPER)	MC201-0U
	2	L1-0	WHT	0 (LOWER)	MC201-0L
PUMP ZP-201 START/RUN PERMISSIVE	3	OUT-1	RED	1 (UPPER)	MXP201-1U
	4	L1-1	GRN	1 (LOWER)	MXP201-1L
PUMP ZP-201 DISCHARGE VALVE OPEN COMMAND	5	OUT-2	ORG	2 (UPPER)	SV201-2U
	6	L1-2	BLU	2 (LOWER)	SV201-2L
SPARE	7	OUT-3	WHT/BLK	3 (UPPER)	
	8	L1-3	RED/BLK	3 (LOWER)	
PUMP ZP-202 RUN COMMAND	9	OUT-4	GRN/BLK	4 (UPPER)	MC202-4U
	10	L1-4	ORG/BLK	4 (LOWER)	MC202-4L
PUMP ZP-202 START/RUN PERMISSIVE	11	OUT-5	BLU/BLK	5 (UPPER)	MXP202-5U
	12	L1-5	BLK/WHT	5 (LOWER)	MXP202-5L
PUMP ZP-202 DISCHARGE VALVE OPEN COMMAND	13	OUT-6	RED/WHT	6 (UPPER)	SV202-6U
	14	L1-6	GRN/WHT	6 (LOWER)	SV202-6L
SPARE	15	OUT-7	BLU/WHT	7 (UPPER)	
	16	L1-7	BLK/RED	7 (LOWER)	
PUMP ZP-203 RUN COMMAND	17	OUT-8	WHT/RED	8 (UPPER)	MC203-8U
	18	L1-8	ORG/RED	8 (LOWER)	MC203-8L
PUMP ZP-203 START/RUN PERMISSIVE	19	OUT-9	BLU/RED	9 (UPPER)	MXP203-9U
	20	L1-9	RED/GRN	9 (LOWER)	MXP203-9L
PUMP ZP-203 DISCHARGE VALVE OPEN COMMAND	21	OUT-10	ORG/GRN	10 (UPPER)	SV203-10U
	22	L1-10	BLK/WHT-RED	10 (LOWER)	SV203-10L
SPARE	23	OUT-11	WHT/BLK-RED	11 (UPPER)	
	24	L1-11	RED/BLK-WHT	11 (LOWER)	
SPARE	25	OUT-12	GRN/BLK-WHT	12 (UPPER)	
	26	L1-12	ORG/BLK-WHT	12 (LOWER)	
SPARE	27	OUT-13	BLU/BLK-WHT	13 (UPPER)	
	28	L1-13	BLK/RED-GRN	13 (LOWER)	
SPARE	29	OUT-14	WHT/RED-GRN	14 (UPPER)	
	30	L1-14	RED/BLK-GRN	14 (LOWER)	
SPARE	31	OUT-15	GRN/BLK-ORG	15 (UPPER)	
	32	L1-15	ORG/BLK-GRN	15 (LOWER)	
	33	N/U			
	34	L1-15			
	35	N/U			
	36	N/U			

MC-201 → SEE DWG NOS. XXX AND XXX (E14-5A AND E14-5B)
MXP-201
SV-201
MC-202 → SEE DWG NOS. XXX AND XXX (E14-4A AND E14-4B)
MXP-202
SV-202
MC-203 → SEE DWG NO. XXX (E14-8)
MXP-203
SV-203

1492-CABLE010TBCH

PLC I/O WIRING DIAGRAM
CHASSIS 1, SLOTS 5 AND 6

NOT TO SCALE 1106-13 041907

SLOT 7

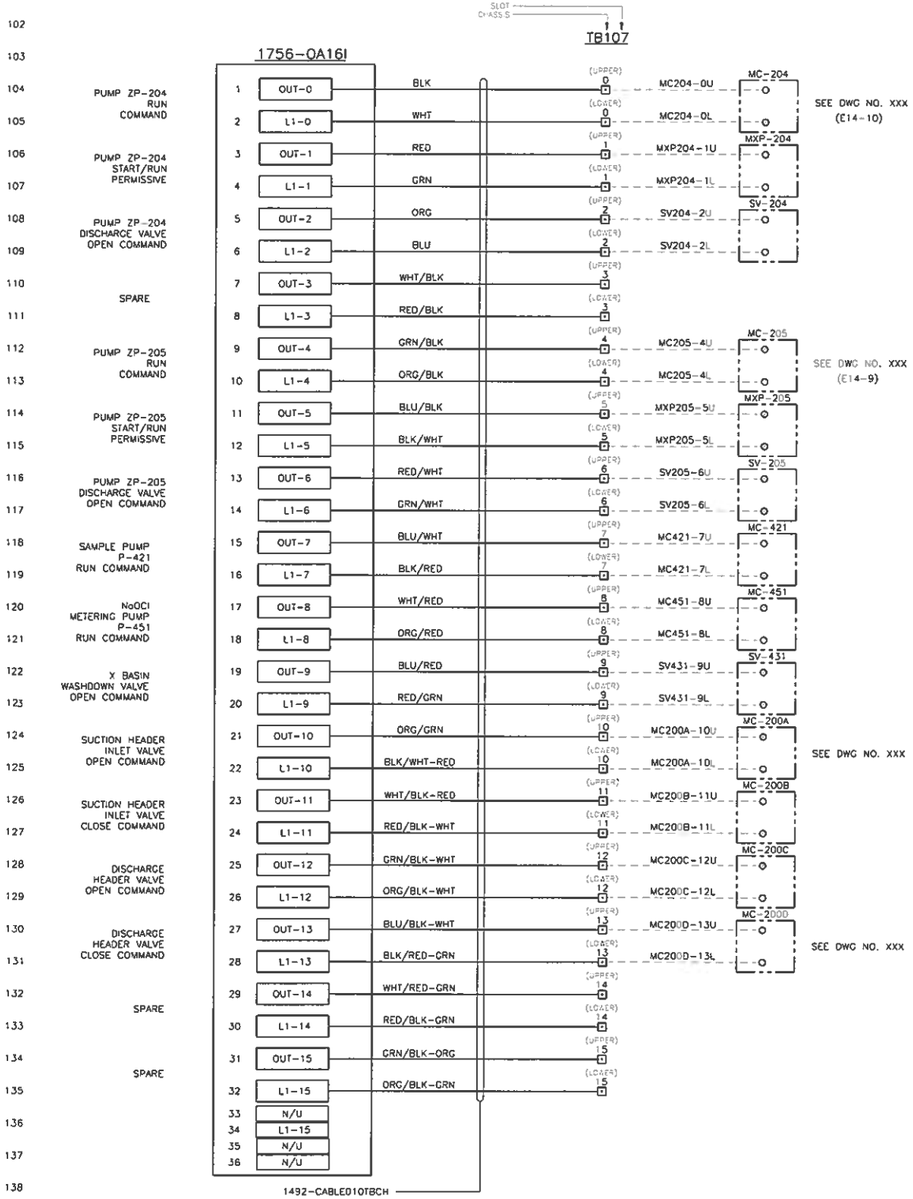

PUMP ZP-204 RUN COMMAND

PUMP ZP-204 START/RUN PERMISSIVE

PUMP ZP-204 DISCHARGE VALVE OPEN COMMAND

SPARE

PUMP ZP-205 RUN COMMAND

PUMP ZP-205 START/RUN PERMISSIVE

PUMP ZP-205 DISCHARGE VALVE OPEN COMMAND

SAMPLE PUMP P-421 RUN COMMAND

NaOCl METERING PUMP P-451 RUN COMMAND

X BASIN WASHDOWN VALVE OPEN COMMAND

SUCTION HEADER INLET VALVE OPEN COMMAND

SUCTION HEADER INLET VALVE CLOSE COMMAND

DISCHARGE HEADER VALVE OPEN COMMAND

DISCHARGE HEADER VALVE CLOSE COMMAND

SPARE

SPARE

SEE DWG NO. XXX (E14-10)

SEE DWG NO. XXX (E14-9)

SEE DWG NO. XXX

SEE DWG NO. XXX

SEE DWG NO. XXX

NOTES:

1. NOTE TO ENGINEER: COMBINE AT LEAST FOUR CARDS PER EACH I/O WIRING DIAGRAM SHEET.

SLOT 8

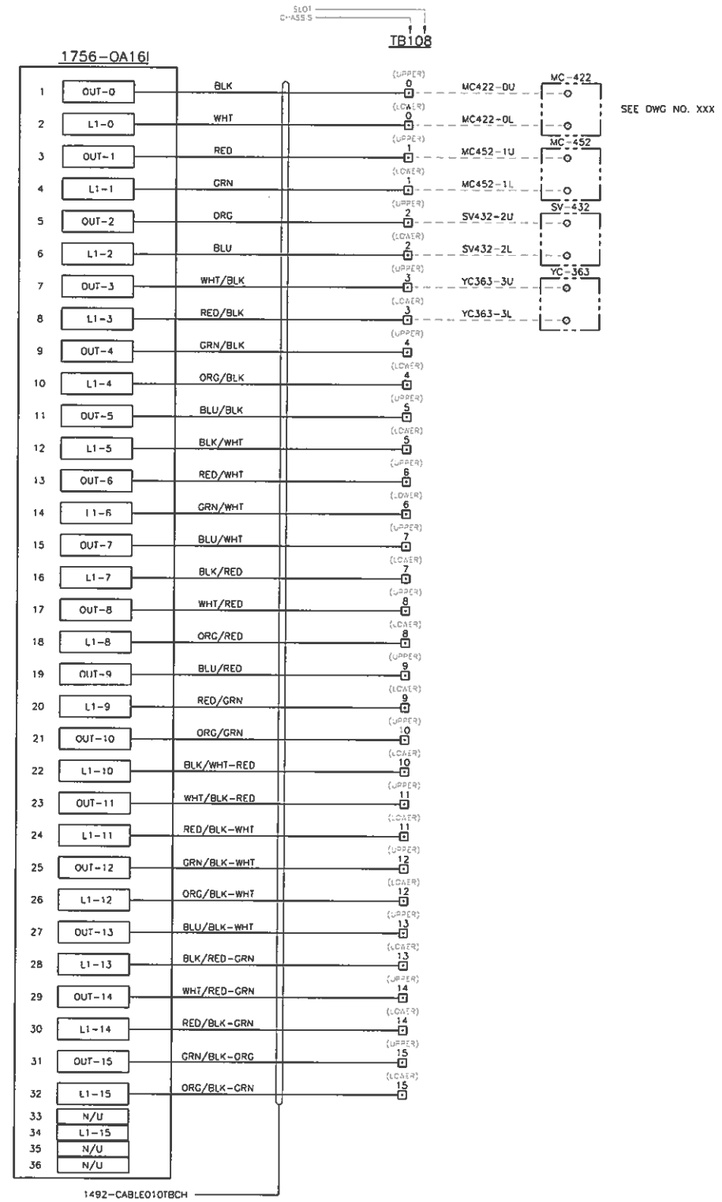

SAMPLE PUMP P-422 RUN COMMAND

NaOCl METERING PUMP P-452 RUN COMMAND

Y BASIN WASHDOWN VALVE OPEN COMMAND

GENERATOR RUN COMMAND (YC-363)

SPARE

SPARE

SPARE

SPARE

SPARE

SPARE

SPARE

SEE DWG NO. XXX

PLC I/O WIRING DIAGRAM
CHASSIS 1, SLOTS 7 AND 8

NOT TO SCALE 1706-14 041907

SLOT 9

SPARE SLOT

PLC I/O WIRING DIAGRAM
CHASSIS 1, SLOTS 9 AND 10

NOT TO SCALE IT06-15 041807

LAS VEGAS VALLEY WATER DISTRICT
DESIGN DETAIL STANDARDS

TABLE OF CONTENTS

DESCRIPTION	REV. DATE	DWG NO.
MISCELLANEOUS		
Facility Identification Signs	07-09-03	MS01
LVVWD Logo – Cast Metal Type	07-09-03	MS02

INTERNAL WELL IDENTIFICATION SIGN

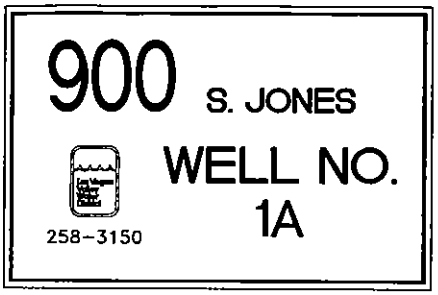

SINGLE WELL FACILITY SIGN

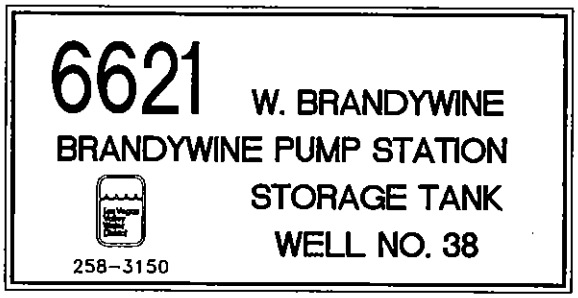

MULTIPLE FACILITY SIGN

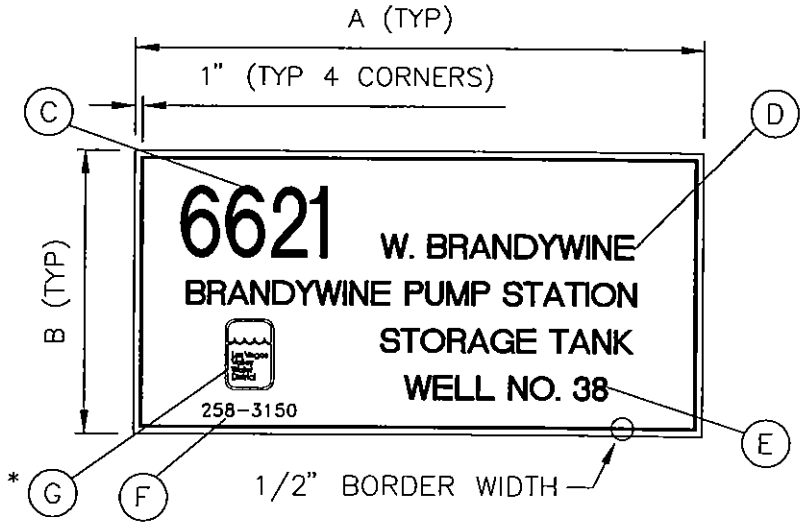

* FOR LOGO DETAILS SEE (X / XXX) (MS02)

FACILITY TYPE	SIGN DIMENSIONS		LETTER SIZE				*G LOGO SIZE
	A LENGTH	B WIDTH	C ADDRESS NO.	D STREET NAME	E FACILITY ID	F PHONE	
INTERNAL WELL	3'-0"	2'-0"	N/A	N/A	8"	N/A	8"
SINGLE WELL	6'-0"	4'-0"	12"	4"	6"	2-1/2"	12"
MULTIPLE FACILITY	8'-0"	4'-0"	12"	4"	4"	2-1/2"	12"

MATERIAL SPECIFICATIONS

BLACK : ADHESIVE VINYL LETTERING (ALL CAPITAL)
BLUE : ADHESIVE VINYL, 3-M SCOTCHCAL SERIES 220, COLOR 37, SAPPHIRE
YELLOW: ADHESIVE VINYL, ARLON, CALON SERIES 2100/2200, COLOR 67, PRIMROSE
TEXT: "STANDARD BOLD" FONT TYPE
STREET NUMBER: "HELVETICA MEDIUM" FONT TYPE
PHONE NUMBER: "HELVETICA MEDIUM" FONT TYPE
1/2" BLUE BORDER, INSET 1"

STANDARD LOGO TYPE AND STYLE

SIGNS TO BE CONSTRUCTED OF 0.12 GA. ALUMINUM WITH WHITE BACKING OF FACTORY BAKED ENAMEL
NOTE: INTERNAL SIGN TO BE CONSTRUCTED OF 0.020 GA. ALUMINUM WITH WHITE BACKING OF FACTORY BAKED ENAMEL

FACILITY IDENTIFICATION SIGNS

NOT TO SCALE MS01 070903

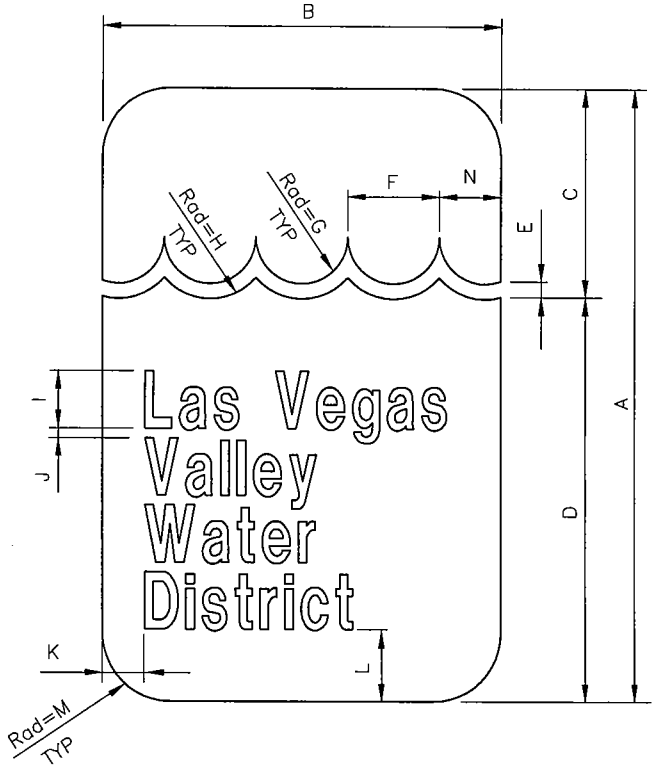

NOTES:

1. FOR LETTERING USE "HELVETICA 3" STYLE (SIZE PER TABLE) WITH WIDTH FACTOR 0.70
2. FOR CAST METAL MATERIAL, WALL MOUNTING AND COLORS SEE (X / XXX) (MS01)
3. LETTERS SHOULD BE CUT OUT TYPE WITH MIDDLE PORTIONS OF LETTERS LEFT OUT OF LETTERS "A", "E", "D" AND "G"

LOGO SIZE	A	B	C	D	E	F	G
8"	8"	5"	2-3/4"	5-1/4"	3/16"	1-1/4"	5/8"
12"	12"	8"	4-1/16"	7-15/16"	5/16"	1-7/8"	15/16"
15"	15"	10"	5-1/8"	9-7/8"	3/8"	2-5/16"	1-3/16"
18"	18"	12"	6-1/8"	11-7/8"	7/16"	2-7/8"	1-7/16"

LOGO SIZE	H	I	J	K	L	M	N
8"	13/16"	3/4"	1/8"	9/16"	15/16"	7/8"	13/16"
12"	1-1/4"	1-3/16"	3/16"	3/4"	1-3/8"	1-5/16"	1-3/16"
15"	1-9/16"	1-1/2"	1/4"	15/16"	1-11/16"	1-5/8"	1-1/2"
18"	18"	1-13/16"	5/16"	1-1/8"	2"	1-15/16"	1-11/16"

LVWWD LOGO - CAST METAL TYPE

NOT TO SCALE MS02 020905

LAS VEGAS VALLEY WATER DISTRICT
DESIGN DETAIL STANDARDS

TABLE OF CONTENTS

DESCRIPTION	REV. DATE	DWG NO.
LANDSCAPE		
Trenching – Open Areas	07-09-03	LS-01
Trenching – Under Hardscape	07-10-03	LS-02
Irrigation Pipe and Wire Trenching Detail	07-10-03	LS-03
Irrigation Control Plan	07-10-03	LS-04
Gate Valve Installation	01-11-07	LS-05
Irrigation Control Valve Installation Detail	01-11-07	LS-06
Quick Coupling Valve Assembly Detail	01-11-07	LS-07
Air/Vacuum Relief Detail	07-10-03	LS-08
Automatic Flushing Valve	07-10-03	LS-09
Flow Sensors Detail	07-10-03	LS-10
Irrigation Control Timer Detail	07-10-03	LS-11
Wall Penetration Detail	07-10-03	LS-12
Typical Emitter Layout Detail	01-11-07	LS-13
Planting Detail	07-10-03	LS-14
Slope Planting Detail	07-10-03	LS-15
Palm Planting Detail	07-10-03	LS-16
Emitter Numbers and Placement	07-10-03	LS-17
Emitter Selection Chart	07-10-03	LS-18
Decomposed Granite Installation	01-12-07	LS-19
Boulder Installation	07-10-03	LS-20
Irrigation Controller Enclosure Detail	08-12-03	LS-21
Irrigation Controller Enclosure Pedestal Detail	08-12-03	LS-22
Irrigation Controller Enclosure Base Plate	08-12-03	LS-23
Irrigation Controller Enclosure Bolt Hole Alignments (Side)	08-12-03	LS-24
Irrigation Controller Enclosure Bolt Hole Alignments (Bottom)	08-12-03	LS-25
Irrigation Controller Enclosure Sunshield Mounting Spacers	08-12-03	LS-26
Irrigation Controller Enclosure Sunshield Detail	08-12-03	LS-27
Irrigation Controller Enclosure Mounting Plate	08-12-03	LS-28
Irrigation Controller Enclosure Bolt Hole Alignments (Top)	08-12-03	LS-29
Irrigation Controller Enclosure Fabrication Notes	08-12-03	LS-30
Pedestal Mounted Irrigation Controller	08-03-05	LS-31
Meter Valve and Flow Sensor Detail	08-03-05	LS-32
Backflow Preventer Atmospheric Vacuum Breaker	06-05-06	LS-33
Emitter Installation Detail	01-11-07	LS-34
Irrigation/Lighting Control Enclosure	01-11-07	LS-35

NOTE:
BACKFILL MATERIAL SHALL BE FREE OF RUBBISH, VEGETABLE MATTER, FROZEN MATERIALS, AND STONES LARGER THAN 3/8" IN MAXIMUM DIMENSIONS. PROVIDE NOT LESS THAN 6" OF CLEARANCE BETWEEN EACH LATERAL LINE, AND NOT LESS THAN 18" OF CLEARANCE BETWEEN LATERAL LINES AND MAINS.

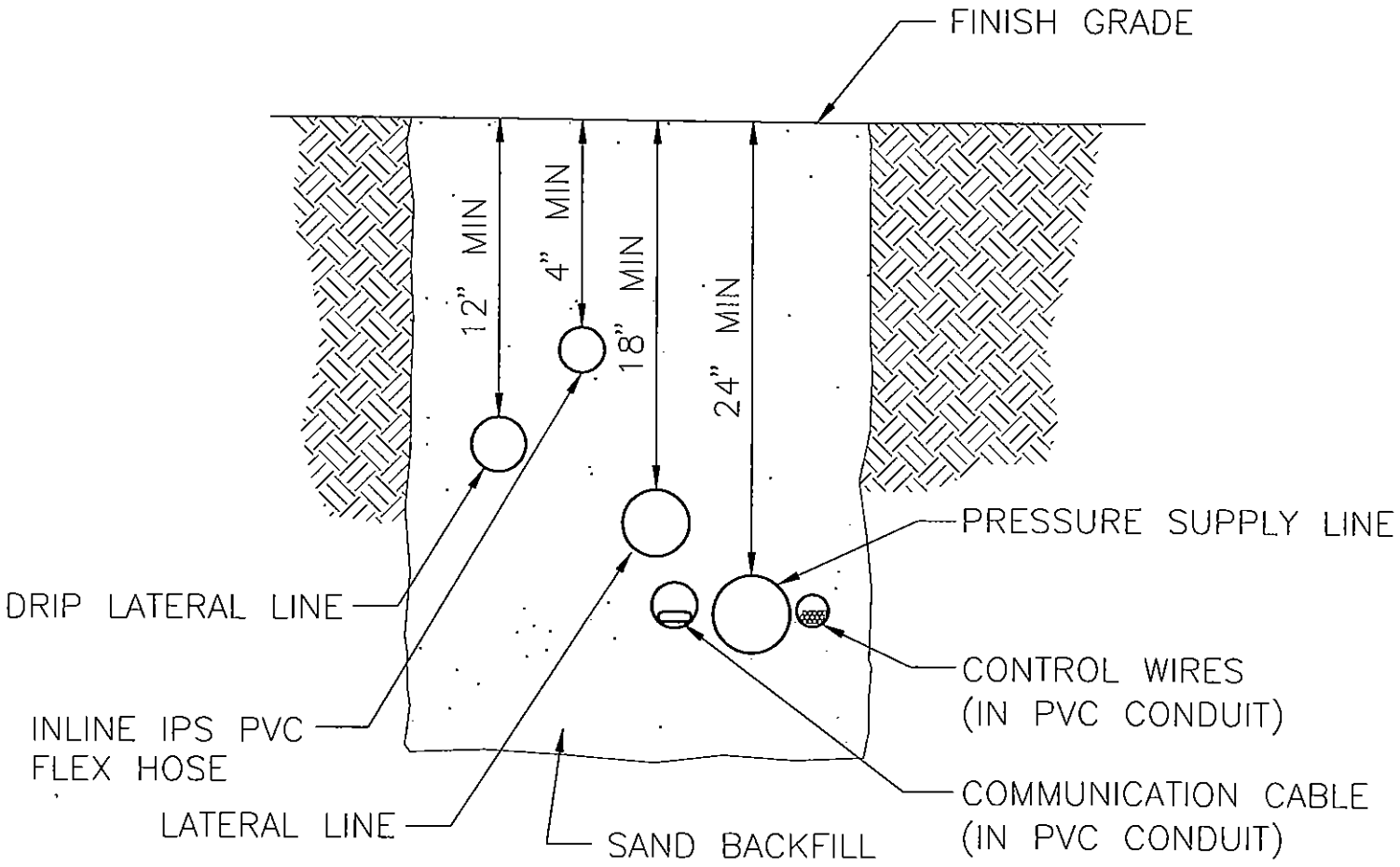

TRENCHING - OPEN AREAS

NOT TO SCALE LS-01 070903

NOTE:
SLEEVE ALL PIPE AND WIRES UNDER WALKS, DRIVEWAYS, STRUCTURES, WALLS, ETC. EXTEND SLEEVE INTO LANDSCAPE AREA 12" MINIMUM. BACKFILL MATERIAL SHALL BE FREE OF RUBBISH, VEGETABLE MATTER, FROZEN MATERIALS, AND STONES LARGER THAN ⅜" IN MAXIMUM DIMENSIONS. PROVIDE NOT LESS THAN 6" OF CLEARANCE BETWEEN EACH LATERAL LINE, AND NOT LESS THAN 18" OF CLEARANCE BETWEEN LATERAL LINES AND MAINS.

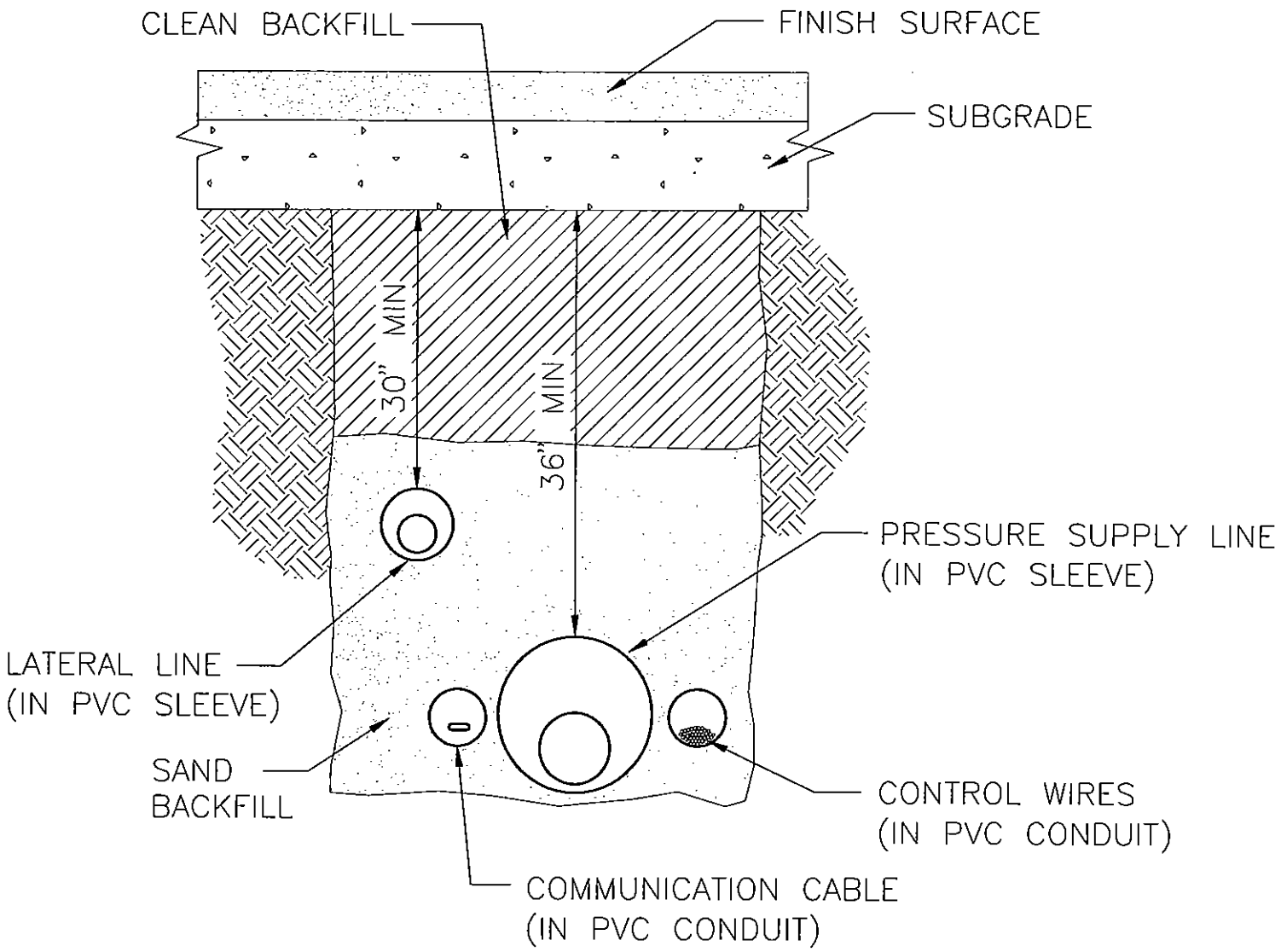

TRENCHING - UNDER HARDSCAPE

NOT TO SCALE LS-02 071003

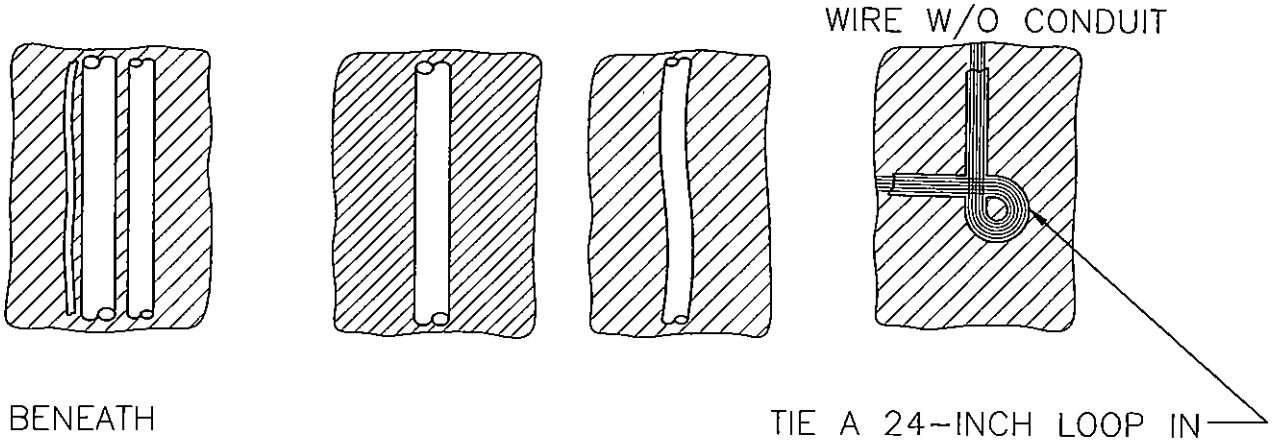

PLAN VIEW

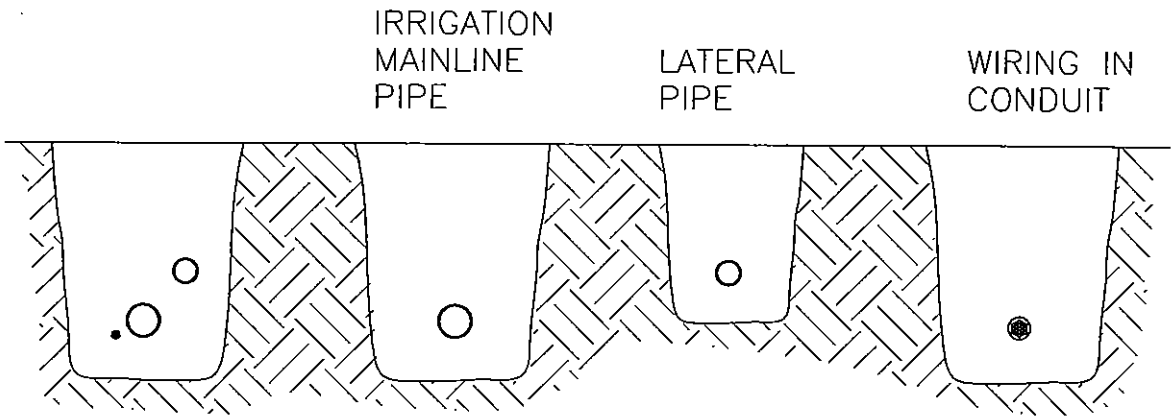

SECTION VIEW

NOTES:

1. SLEEVE BELOW ALL HARDSCAPE ELEMENTS WITH CLASS 200 PVC TWICE THE DIAMETER OF THE PIPE OR WIRE BUNDLE WITHIN.
2. FOR PIPE AND WIRE BURIAL DEPTHS SEE SPECIFICATIONS.
3. ALL SOLVENT WELD PLASTIC PIPING TO BE SNAKED IN TRENCH AS SHOWN.

IRRIGATION PIPE AND WIRE TRENCHING DETAIL

NOT TO SCALE LS-03 071003

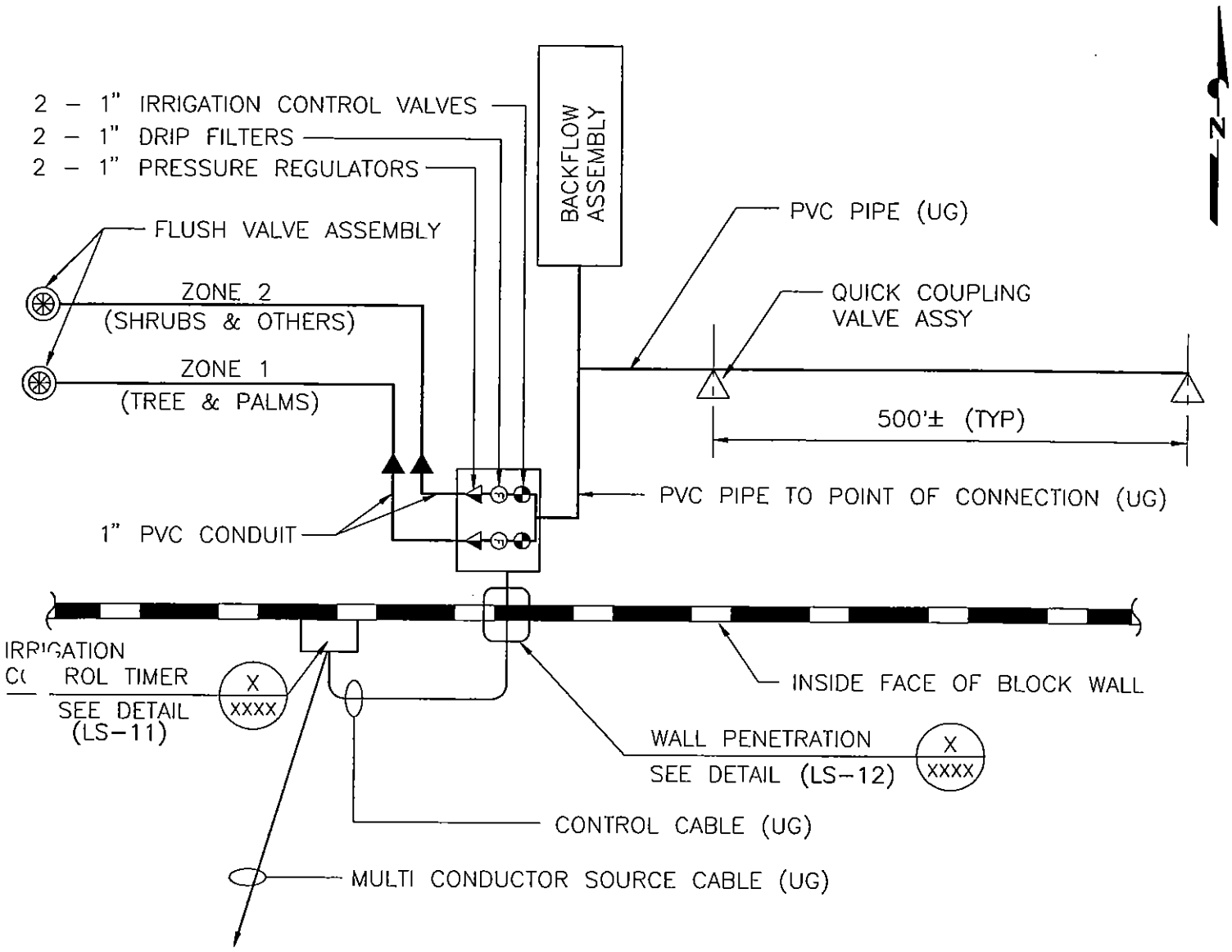

NOTES:

1. QUICK COUPLING VALVE ASSEMBLIES SHALL BE INSTALLED AT A DISTANCE OF 500(±) FOOT INTERVALS THROUGH THE TOTAL LENGTH OF THE LINE OR A MINIMUM OF TWO PER PROJECT.
2. FLUSH VALVE ASSEMBLY SHALL BE INSTALLED AT THE END OF EACH ZONE WATER LINE.

IRRIGATION CONTROL PLAN

NOT TO SCALE LS-04 071003

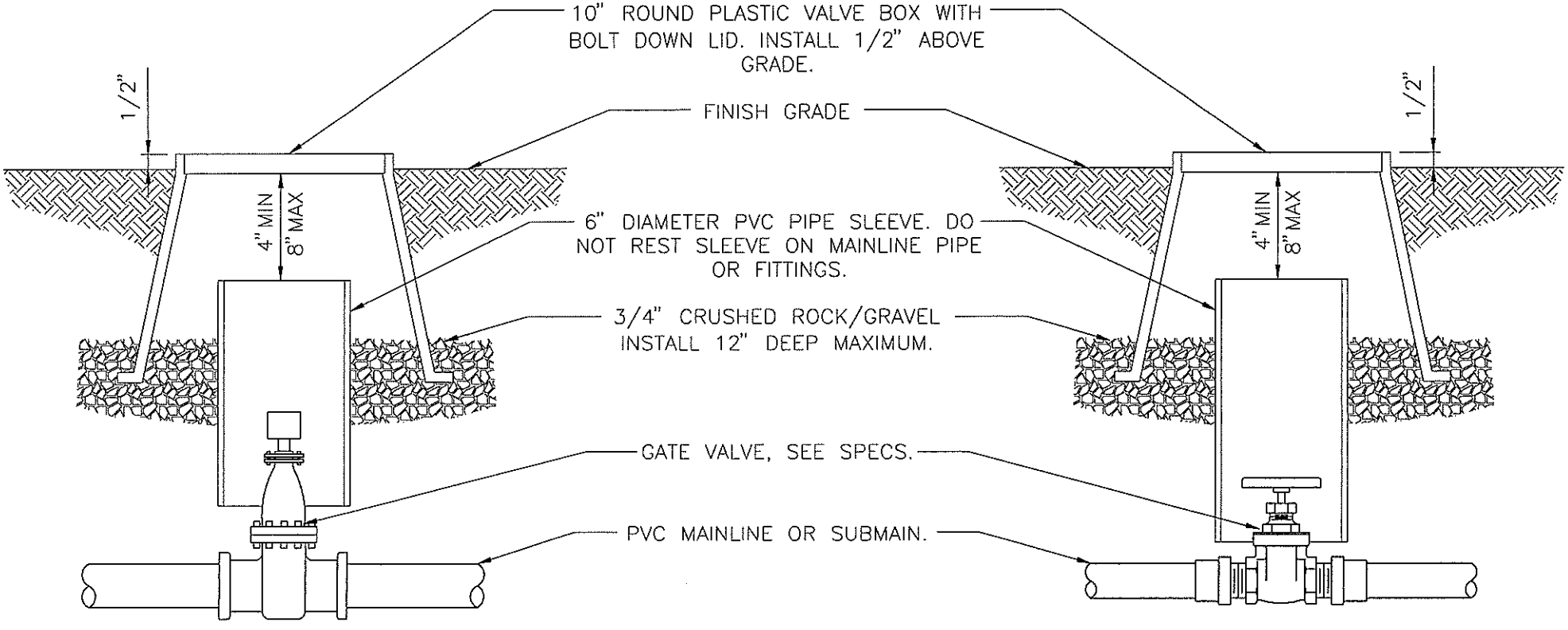

GATE VALVE 4" AND LARGER

GATE VALVE 3" AND SMALLER

NOTES:

1. WRAP ALL THREADS WITH TELFON TAPE.
2. COMPACT SOILS AROUND VALVE BOX TO 90% OF MAXIMUM DRY DENSITY.
3. FLUSH ALL MAINLINE PIPING PRIOR TO INSTALLING VALVES.
4. BOXES LOCATED IN PAVED OR VEHICLE TRAFFIC AREAS SHALL BE CONCRETE TRAFFIC BOX WITH METAL LID.

GATE VALVE INSTALLATION

NOT TO SCALE LS-05 011107

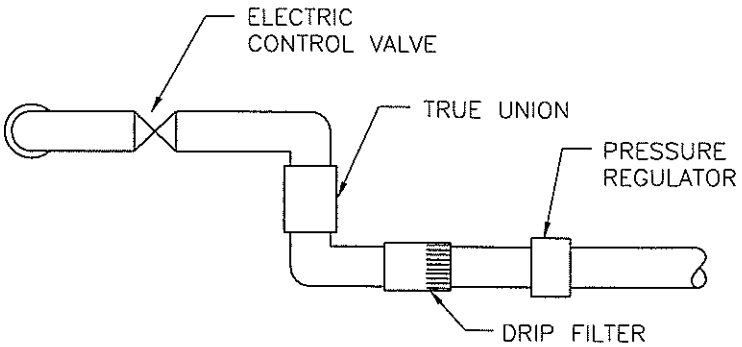

PLAN VIEW

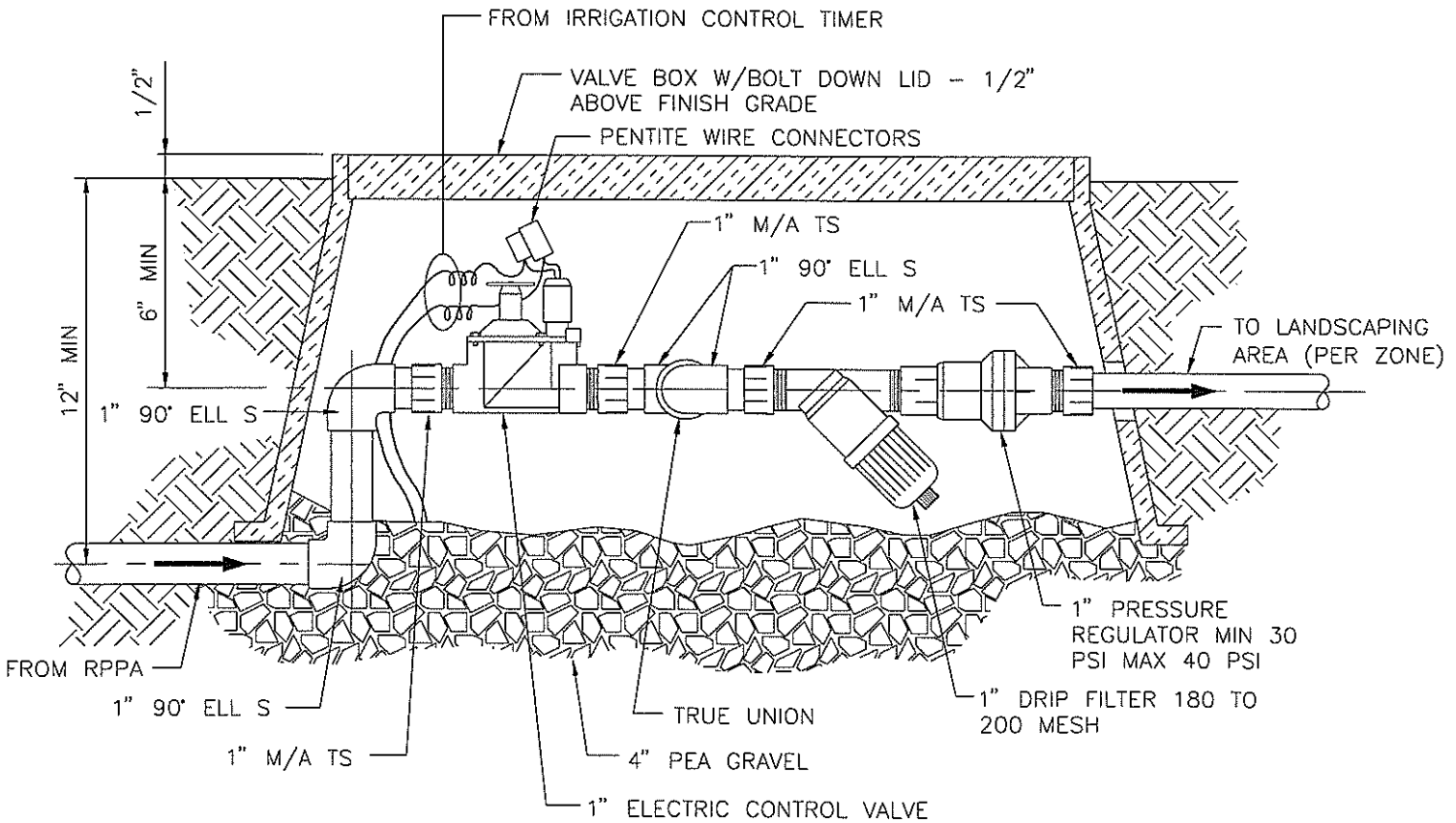

NOTE:
INSTALL 1" TRUE UNION BETWEEN ELECTRIC CONTROL VALVE AND DRIP FILTER.

IRRIGATION CONTROL VALVE INSTALLATION DETAIL

NOT TO SCALE LS-06 011107

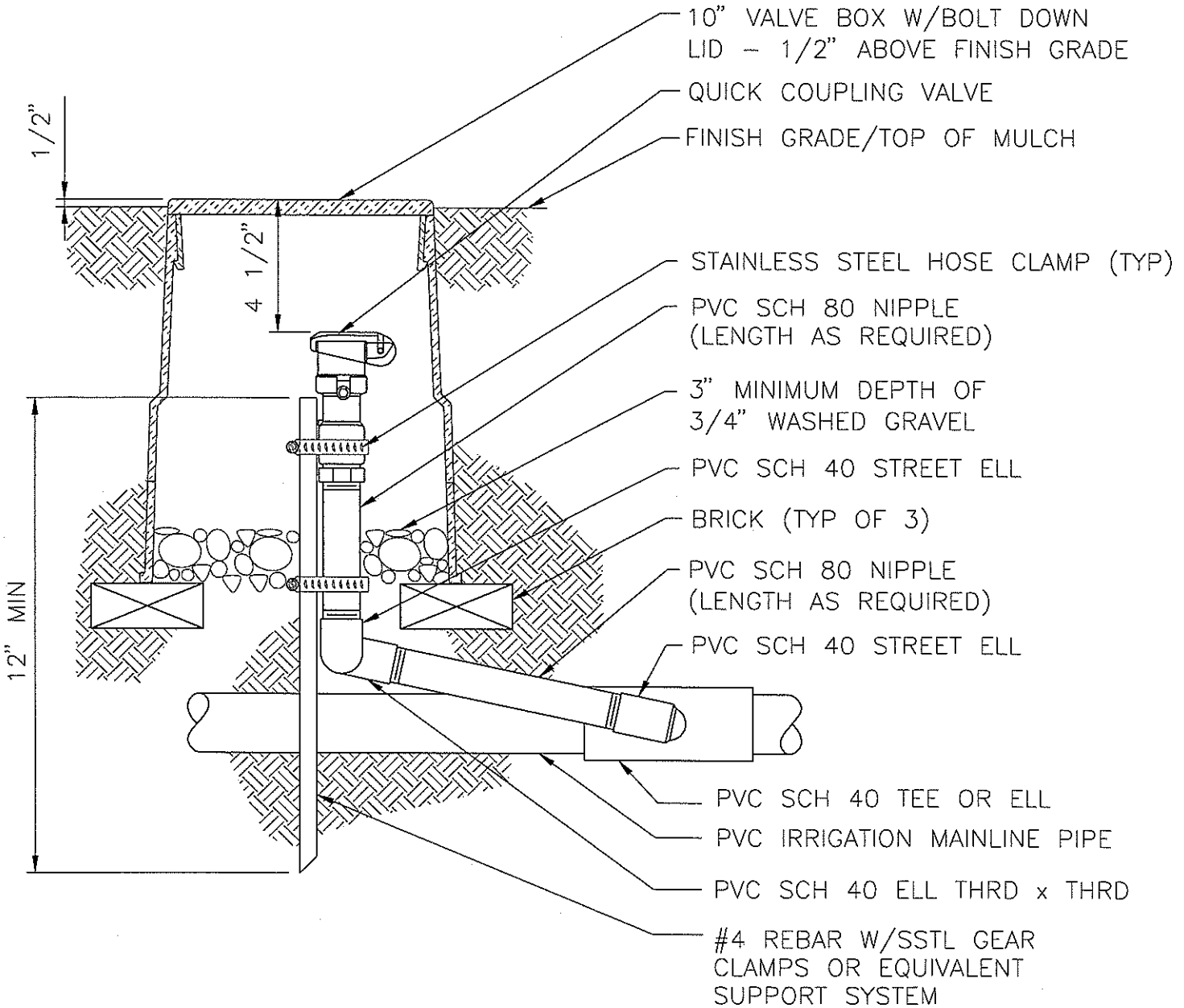

NOTE:

1. FURNISH FITTINGS AND PIPING NOMINALLY SIZED IDENTICAL TO NOMINAL QUICK COUPLING VALVE INLET SIZE.

2. WRAP ALL THREADS WITH TEFLON TAPE.

3. FLUSH ALL PIPING PRIOR TO INSTALLING VALVE BOX.

QUICK COUPLING VALVE ASSEMBLY DETAIL

NOT TO SCALE LS-07 011107

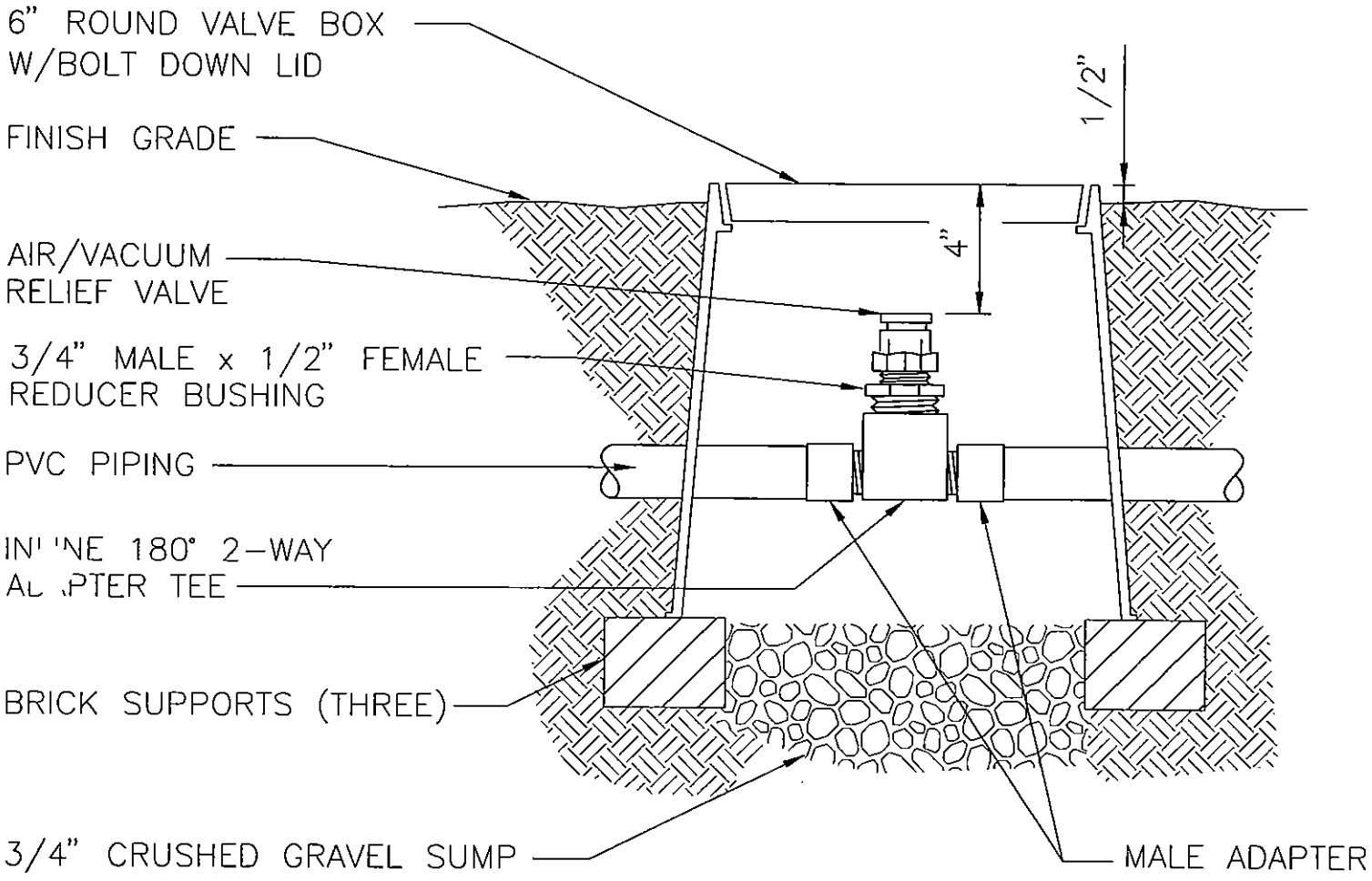

AIR/VACUUM RELIEF DETAIL

NOT TO SCALE LS-08 071003

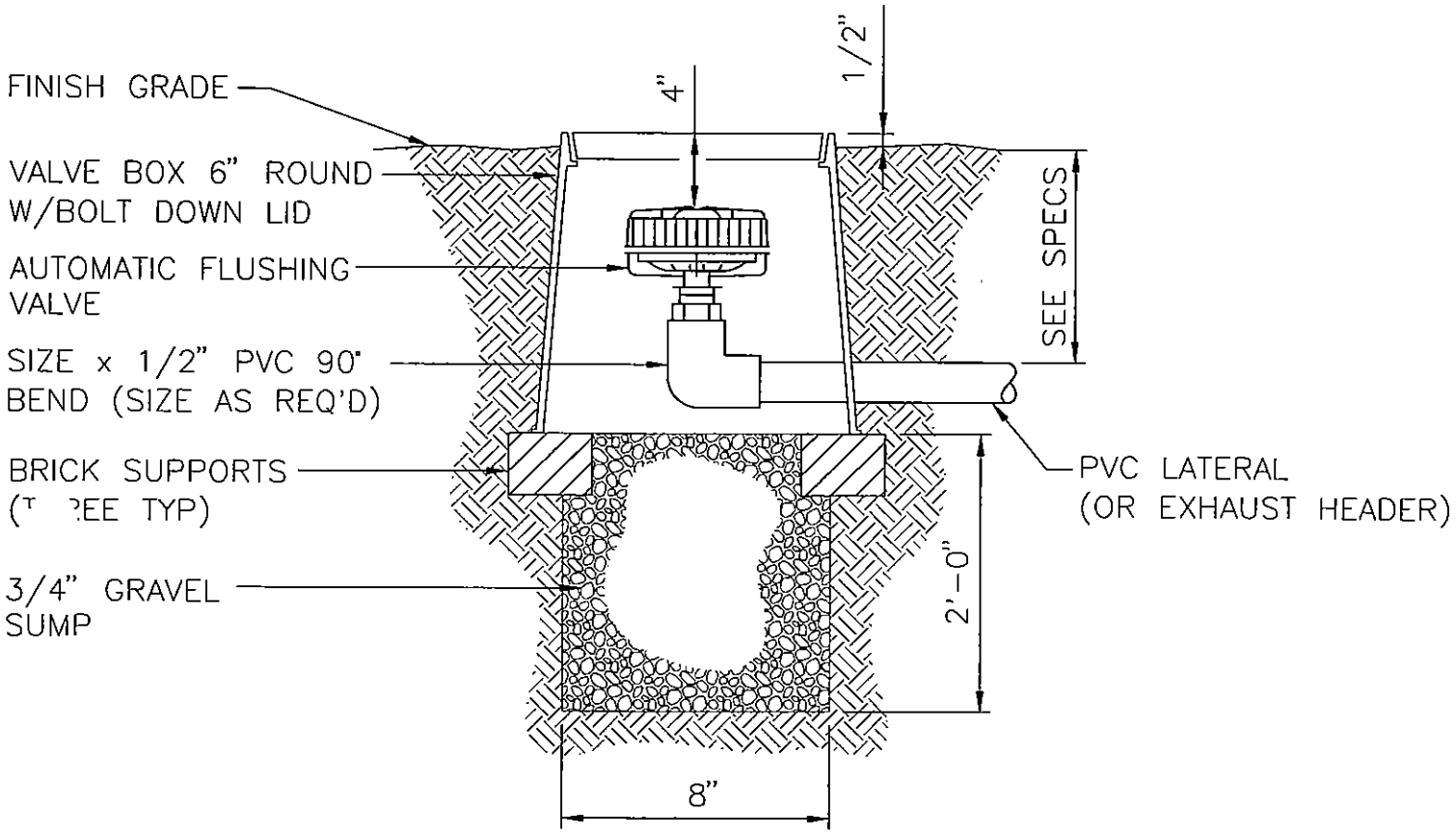

AUTOMATIC FLUSHING VALVE

NOT TO SCALE LS-09 071003

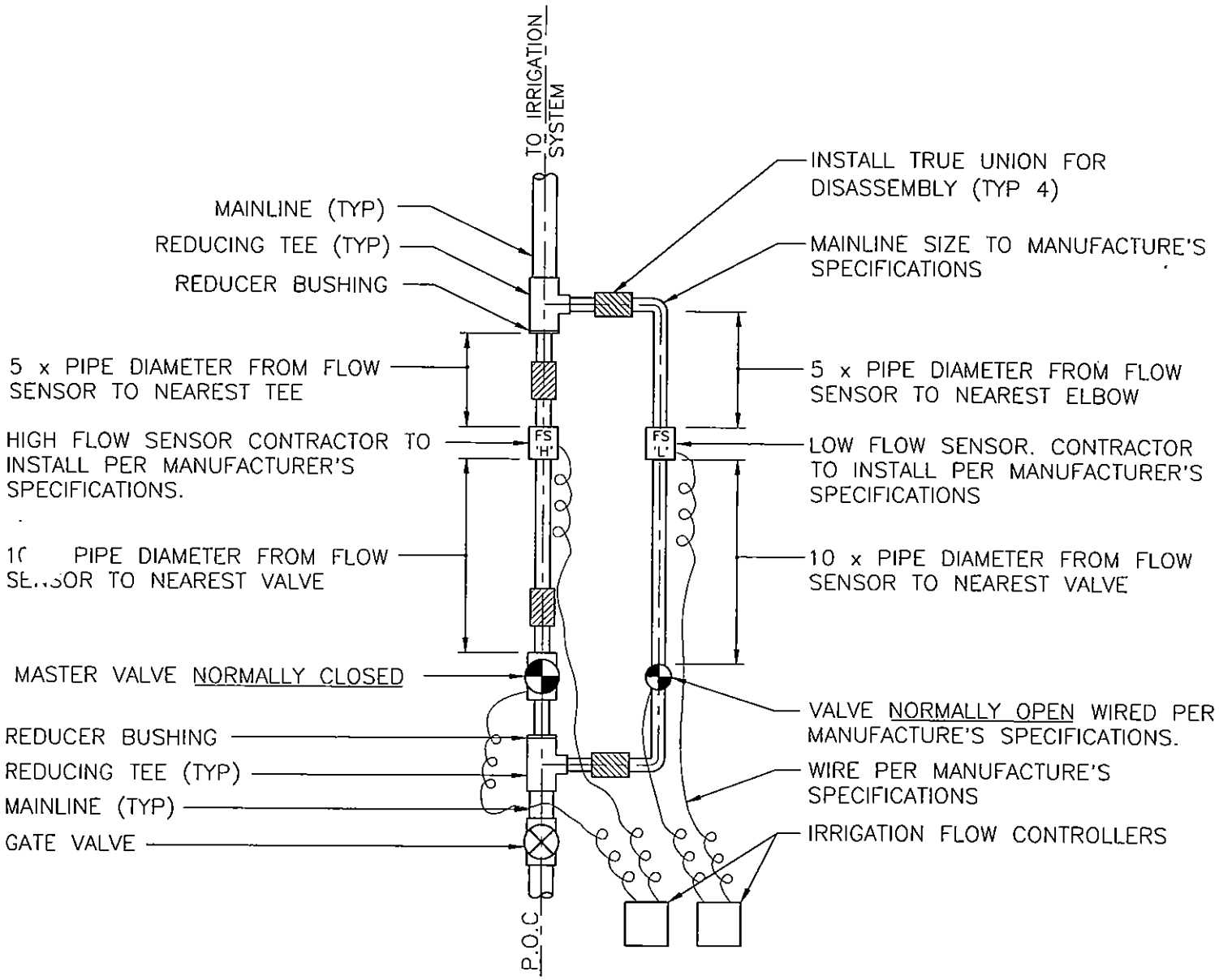

FLOW SENSORS DETAIL

NOT TO SCALE LS-10 071003

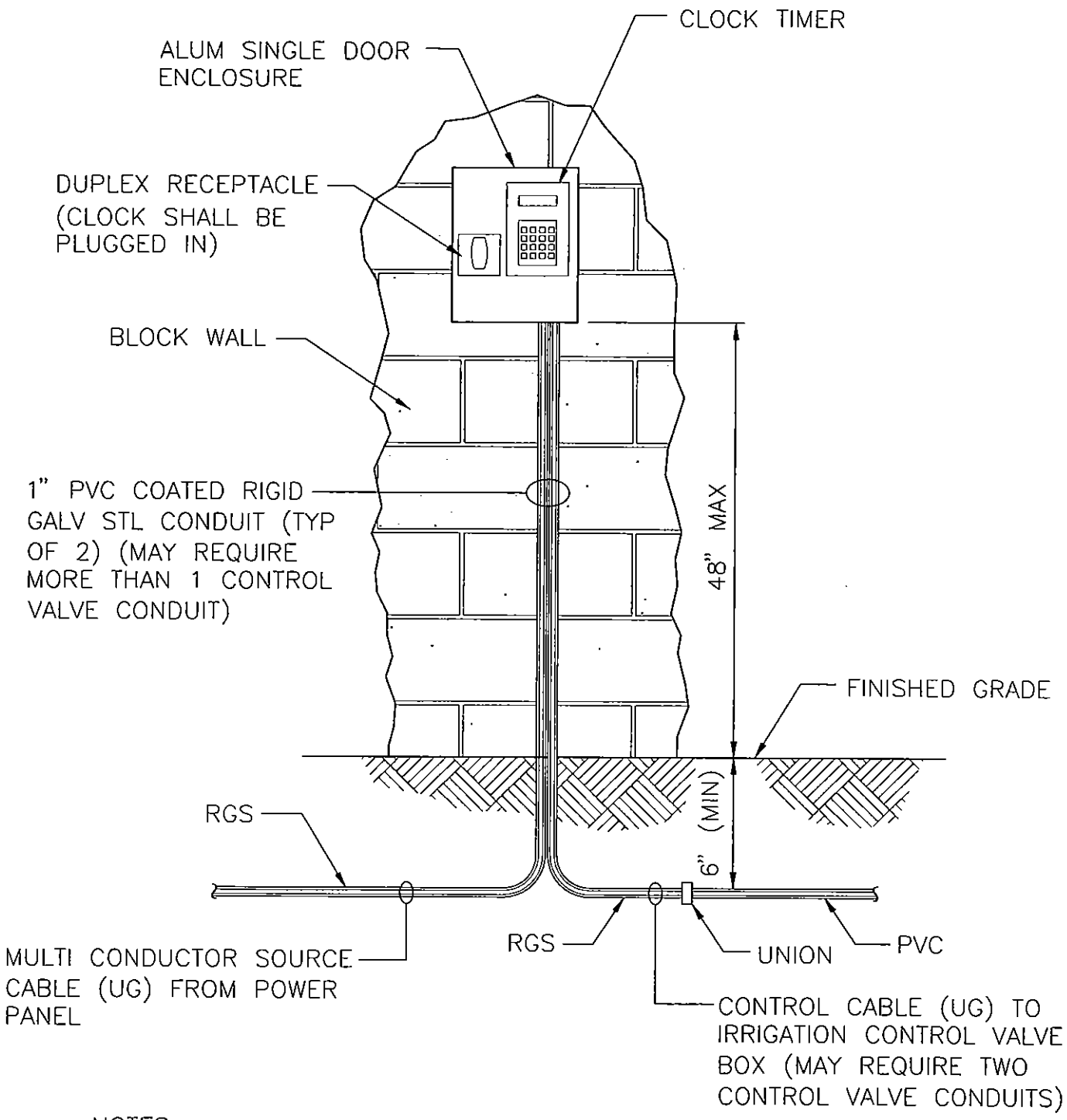

NOTES:

1. FOR ELECTRICAL ROUTING, SEE DETAIL X / XXXX
2. WHEN POSSIBLE THE CONTROL TIMER SHALL BE INSTALL ON THE NORTH WALL, OUT/AWAY FROM THE SUN LIGHT.
3. USE ONLY FOR SITES WITH LESS THAN 6 STATIONS.

IRRIGATION CONTROL TIMER DETAIL

NOT TO SCALE LS-11 071003

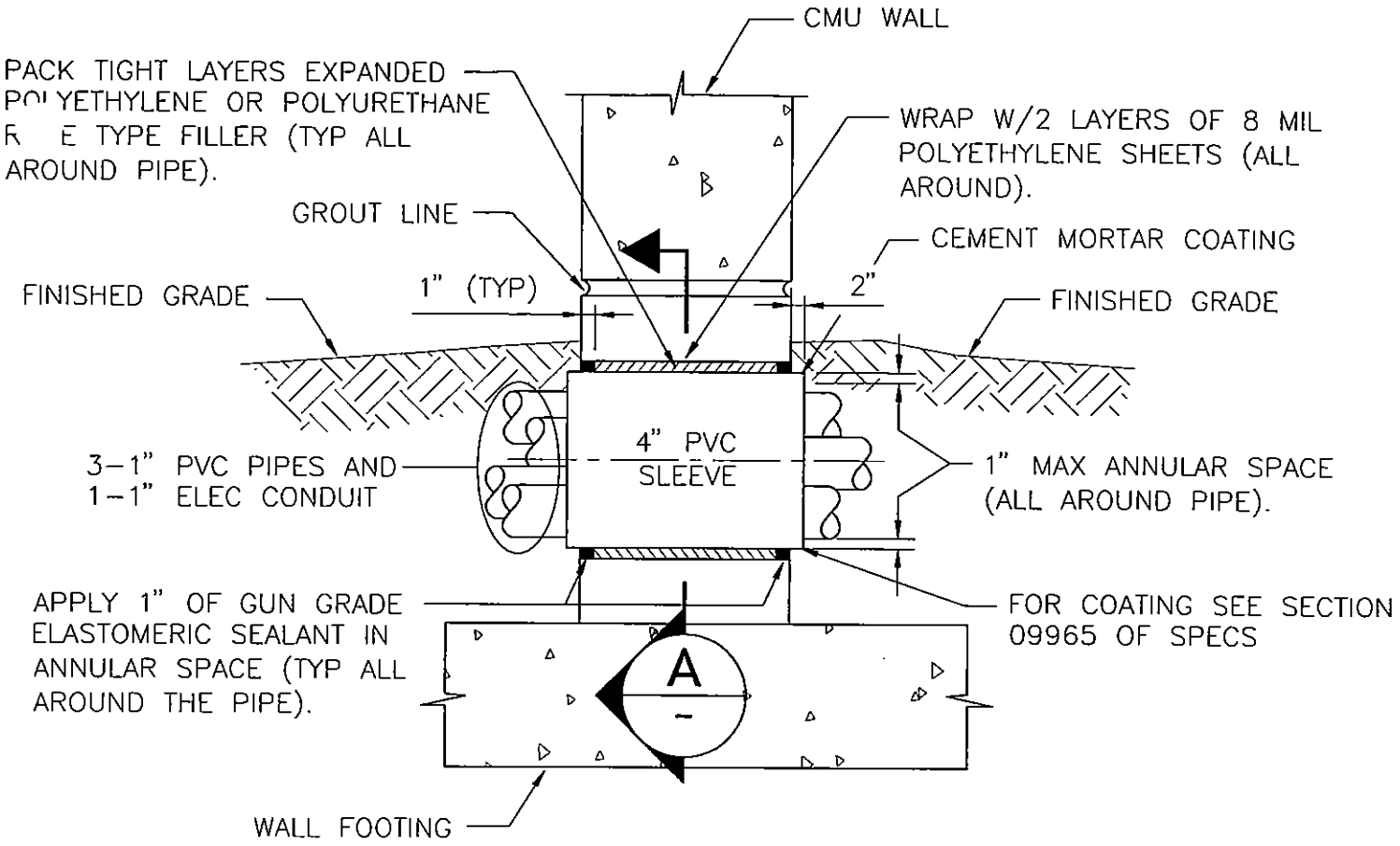

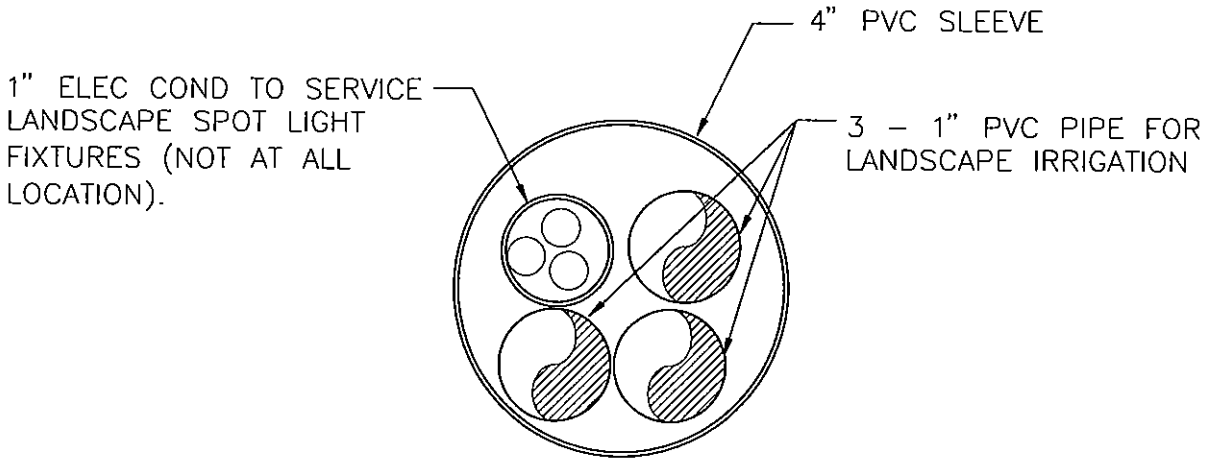

SECTION A

WALL PENETRATION DETAIL

NOT TO SCALE LS-12 071003

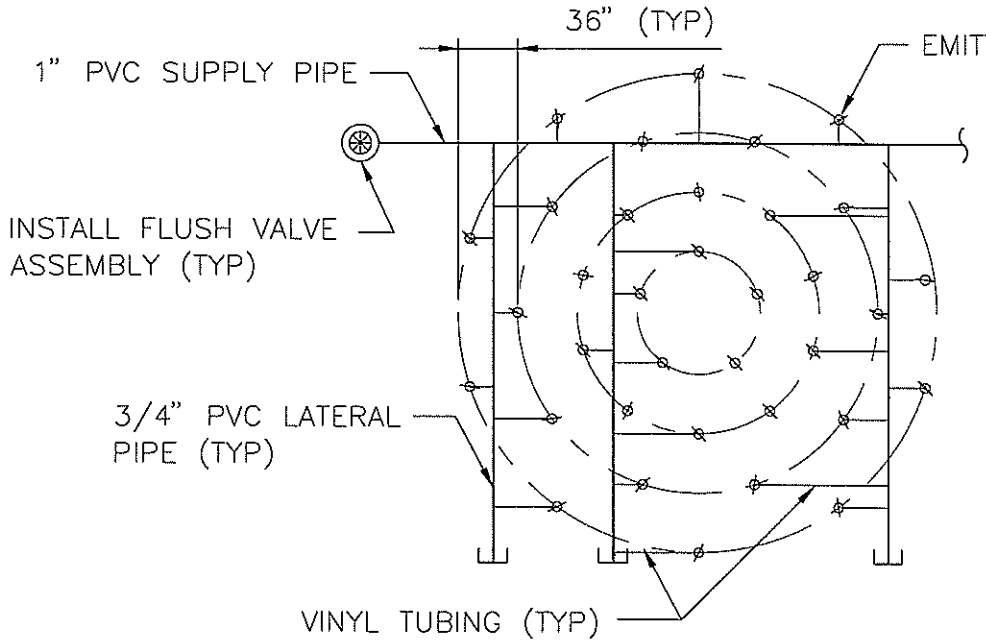

EMITTER QUANTITIES	
PLANT SIZE	QUANTITY
1 GAL	1
5 GAL	2
15 GAL	8
24" BOX	12
36" BOX	20
PALMS	20

PLAN

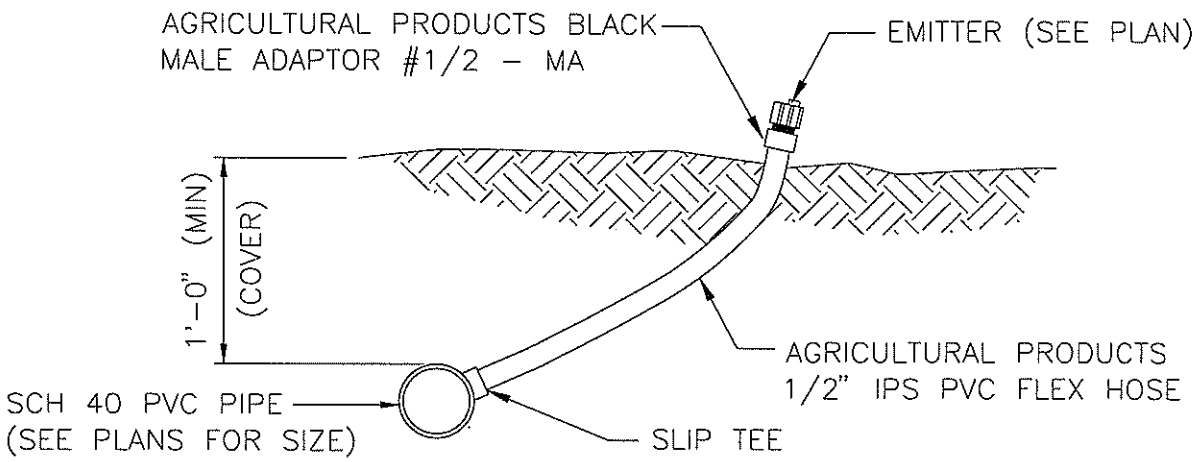

SECTION

NOTES:

1. THIS IS A SUGGESTED EMITTER LAYOUT PLAN. ACTUAL LAYOUT MAY VARY DEPENDING ON SURROUNDING FEATURES. THE INTENT IS TO PROVIDE WATER FOR FUTURE ROOT GROWTH.
2. ADJACENT TREES AND SHRUBS MAY SHARE THE SAME EMITTER WHERE PATTERNS OVERLAP.
3. BEGIN PLACEMENT OF EMITTERS ADJACENT TO ROOT BALL OF PLANT AND WORK OUTWARD IN ALL DIRECTIONS UNTIL THE REQUIRED NUMBER OF EMITTERS PER PLANT IS OBTAINED.
4. PALM TREES REQUIRE MULTI PORT BOW SWITCH.

TYPICAL EMITTER LAYOUT DETAIL

NOT TO SCALE LS–13 011107

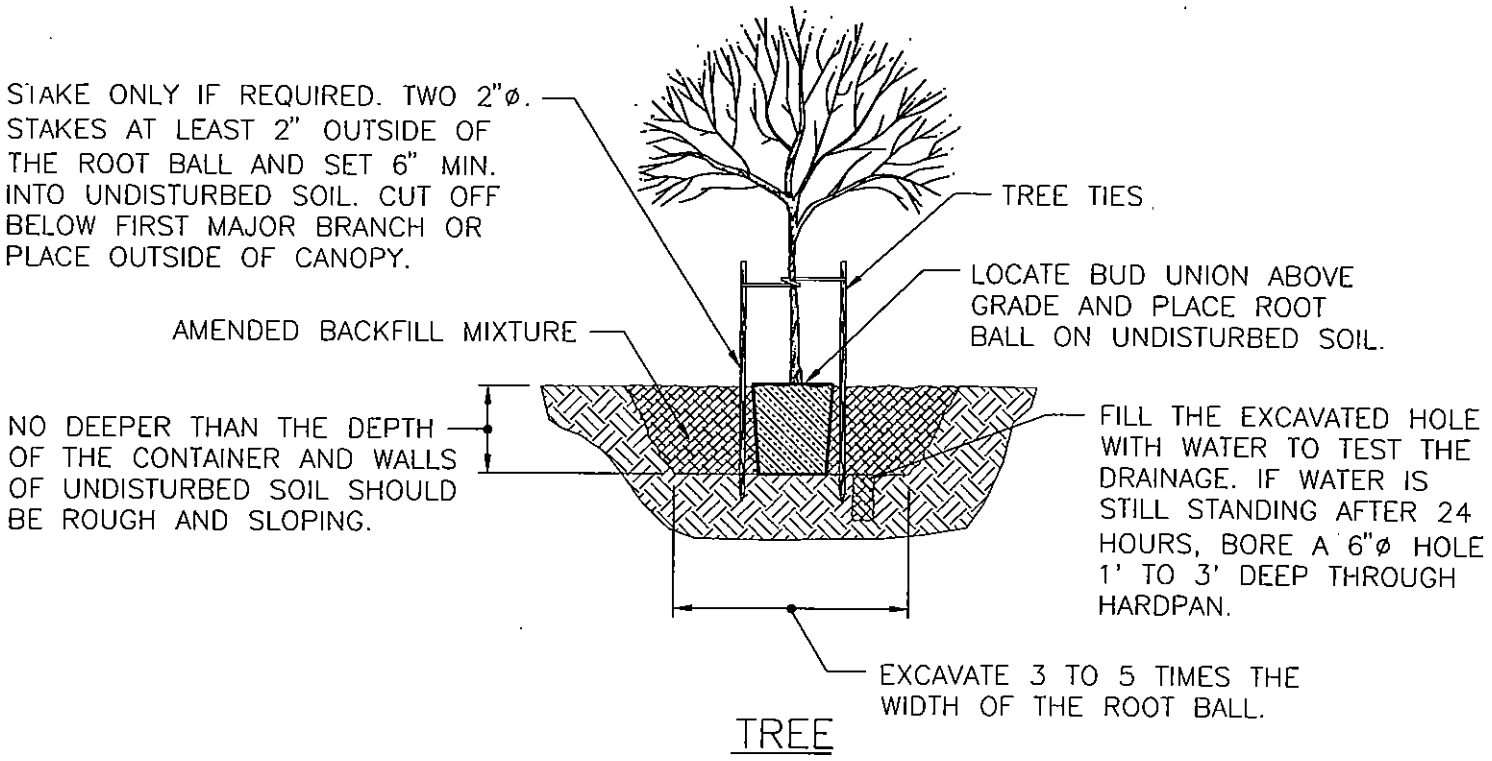

TREE

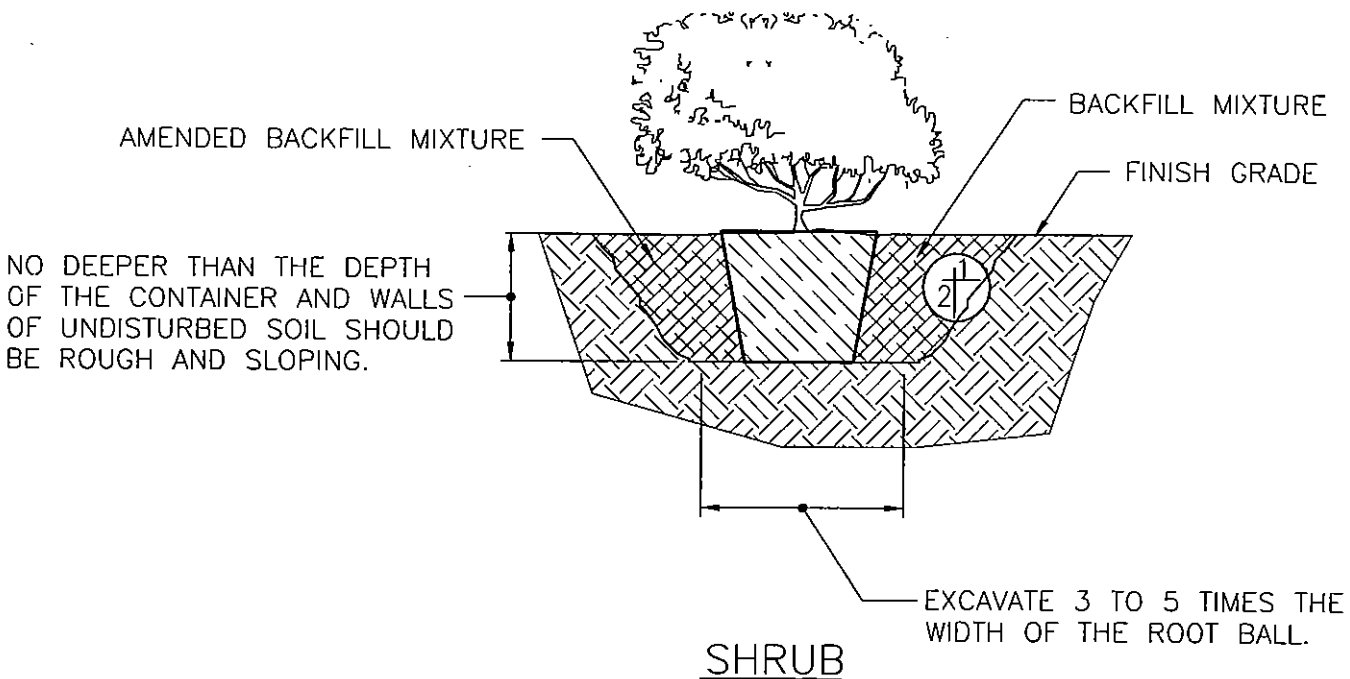

SHRUB

PLANTING DETAIL

NOT TO SCALE LS-14 071003

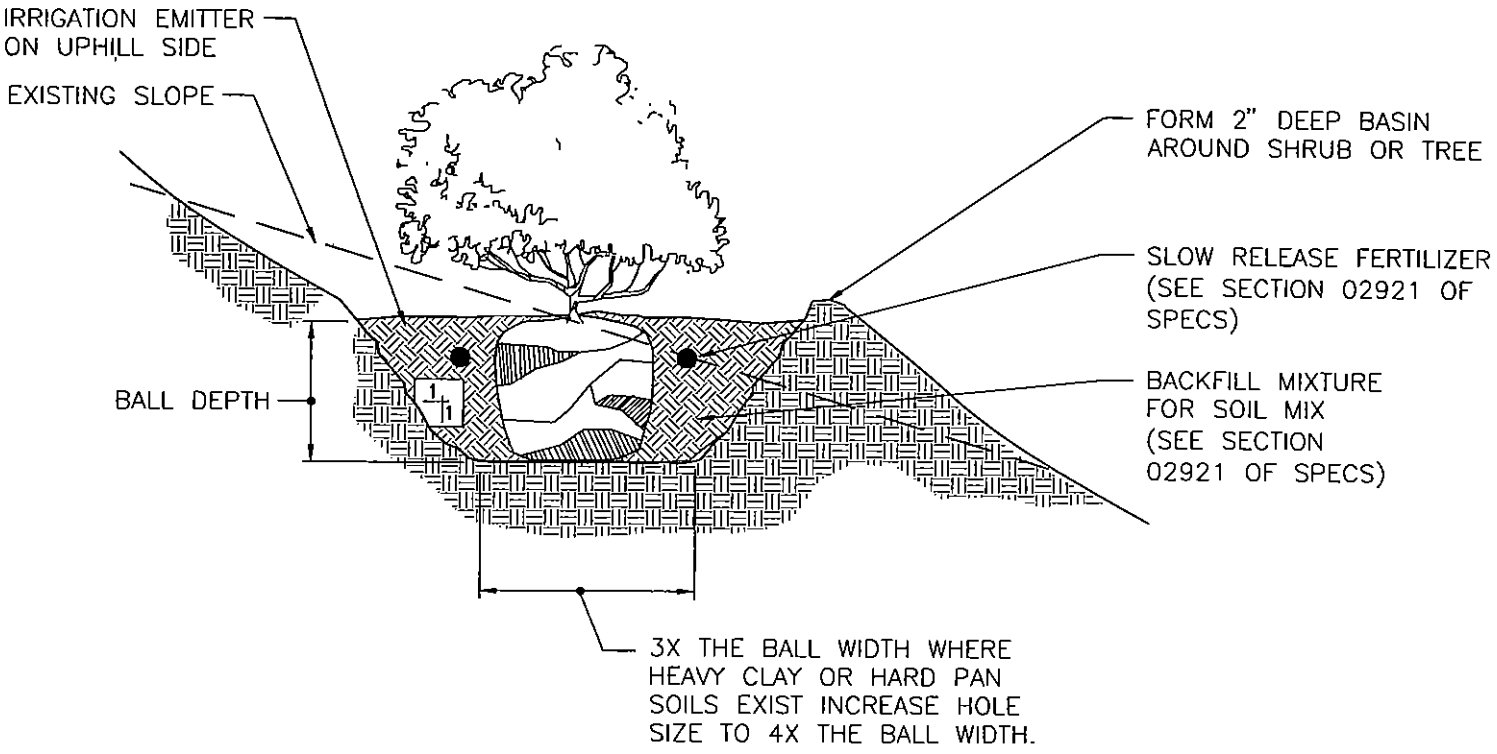

SLOPE PLANTING DETAIL

NOT TO SCALE LS-15 071003

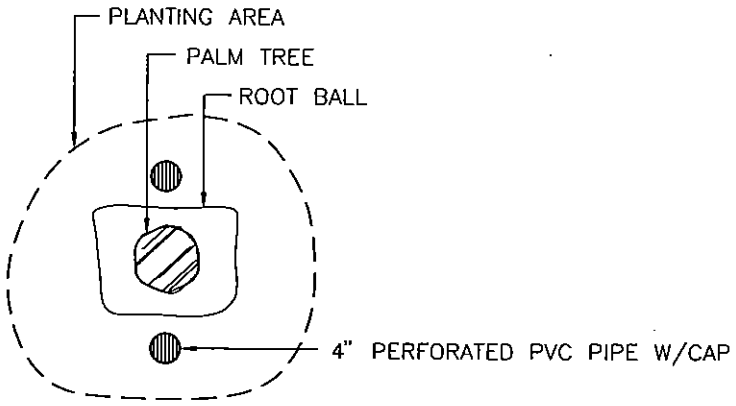

PLAN VIEW

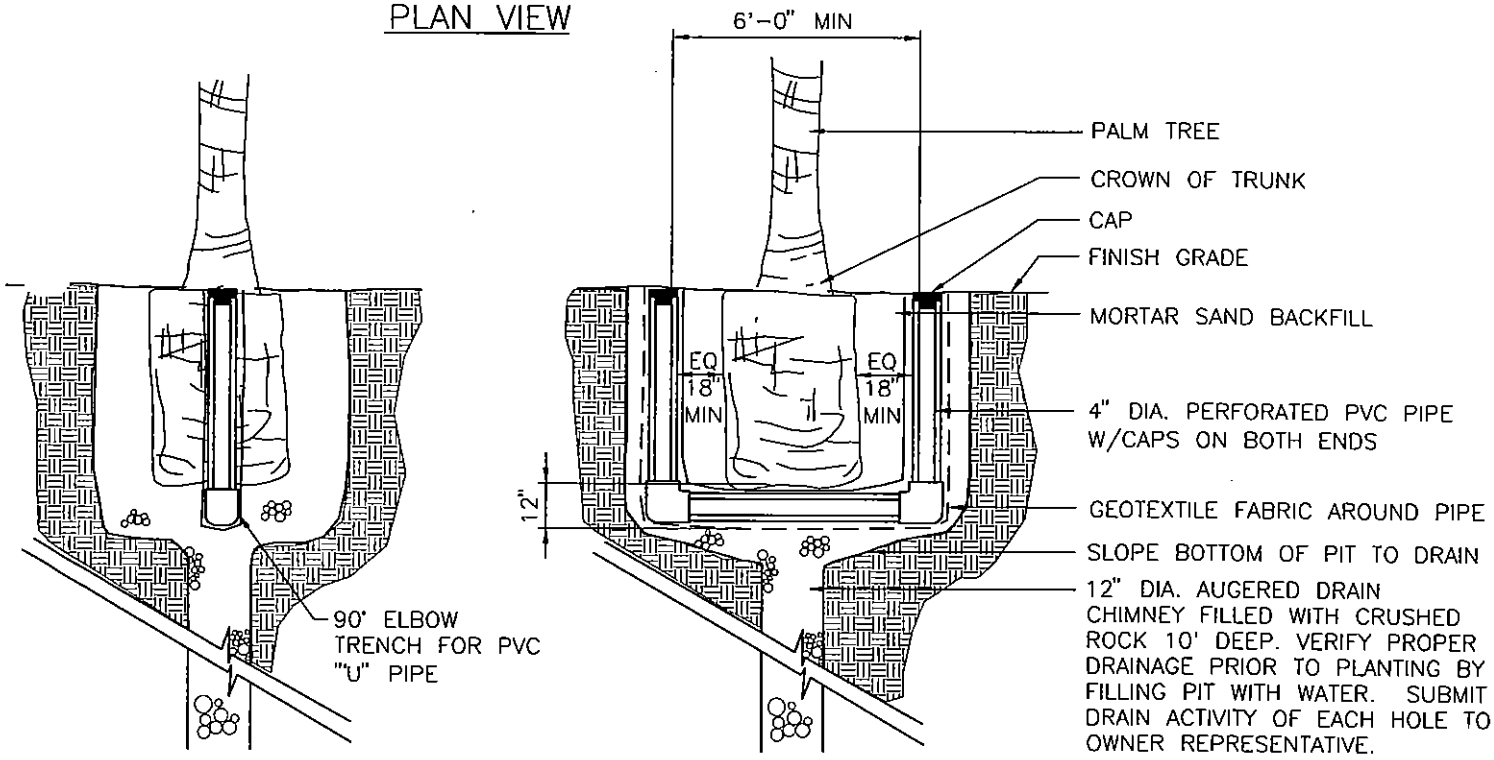

PALM PLANTING DETAIL

NOT TO SCALE LS-16 071003

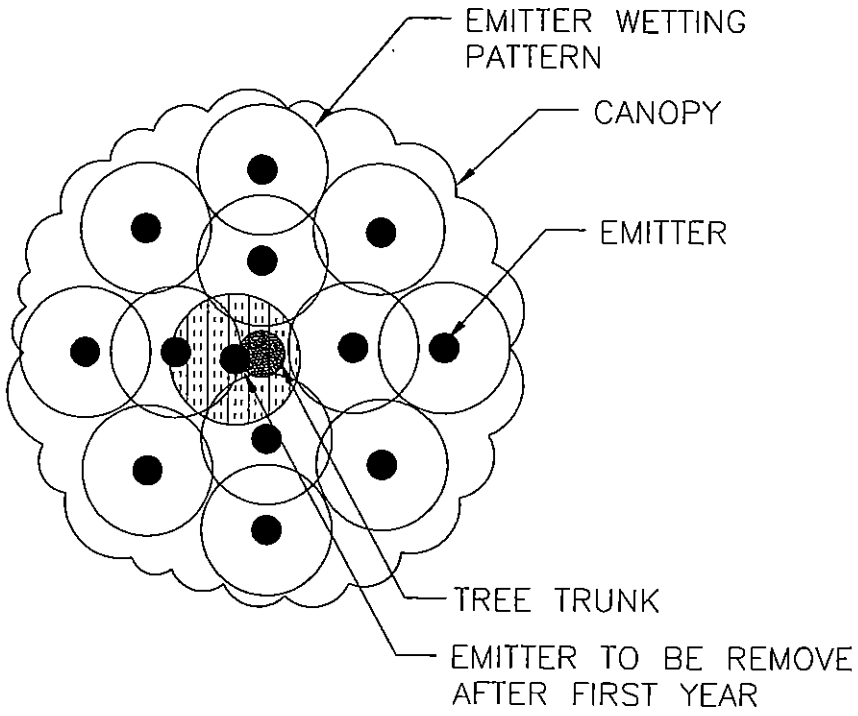

EMITTER LAYOUT
(FIRST YEAR)

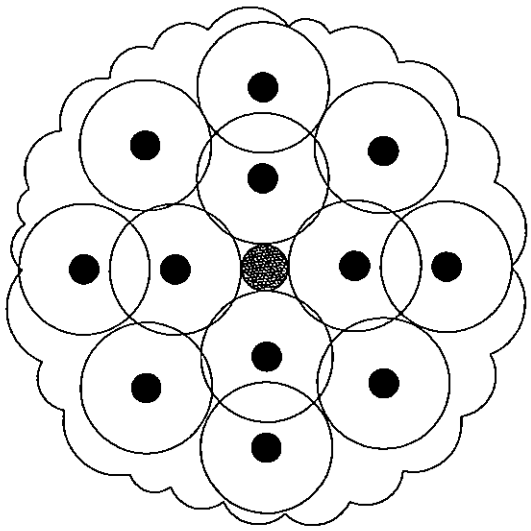

EMITTER LAYOUT
(AFTER FIRST YEAR)

TYPE OF SOIL DATA TABLE		
TYPE OF SOIL	EMITTER	DISTANCE
SANDY	1 GPH	2' APART
LOAMY	1 GPH	4' APART
CLAY	1 GPH	6' APART
SANDY	2 GPH	3' APART
LOAMY	2 GPH	5' APART
CLAY	2 GPH	7' APART

EMITTER NUMBERS AND PLACEMENT

NOT TO SCALE LS-17 071003

SHRUBS

PLANT DIAMETER (FEET)		2	4	6	8	10	15
SAND	NUMBER OF EMITTERS	1	3	3	5	8	18
	EMITTER RATE (GPH)	1	1	2	2	2	2
LOAM	NUMBER OF EMITTERS	1	2	2	4	6	13
	EMITTER RATE (GPH)	.05	.05	1	1	1	2
CLAY	NUMBER OF EMITTERS	1	1	3	2	3	7
	EMITTER RATE (GPH)	.05	.05	.05	1	1	1

TREES

PLANT DIAMETER (FEET)		10	15	20	25
SAND	NUMBER OF EMITTERS	5	12	20	32
	EMITTER RATE (GPH)	2	2	2	2
LOAM	NUMBER OF EMITTERS	3	7	12	17
	EMITTER RATE (GPH)	2	2	2	2
CLAY	NUMBER OF EMITTERS	2	5	8	13
	EMITTER RATE (GPH)	1	1	1	1

EMITTER SELECTION CHART

NOT TO SCALE LS-18 071003

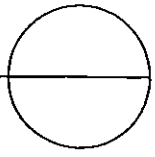

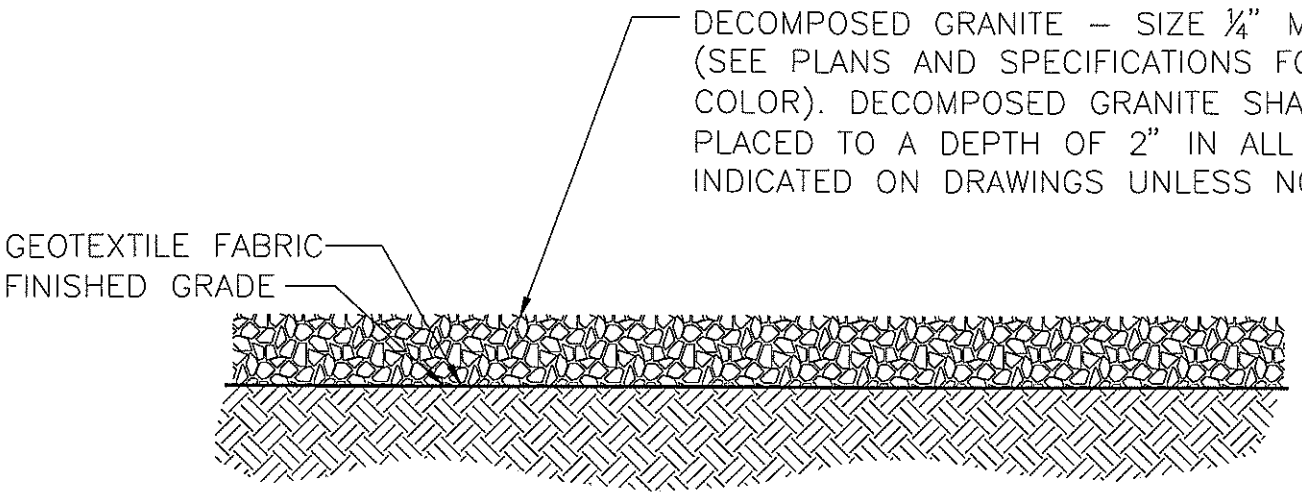

NOTE:
COMPACT SUBGRADE TO 90% (EXCEPT AROUND PLANTS) AND APPLY A PRE-EMERGENT HERBICIDE TO THE SOIL BEFORE PLACING GRANITE AT REQUIRED DEPTH. RAKE SMOOTH, WET TO ENTIRE DEPTH, ROLL WITH A 150 LB. ROLLER, THEN LIGHTLY SCARIFY SURFACE WITH A LEAF RAKE. KEEP TOP OF GRANITE 1" BELOW ADJACENT WALKS, CURBS OR OTHER HARD SURFACES.

DECOMPOSED GRANITE INSTALLATION

NOT TO SCALE LS-19 011207

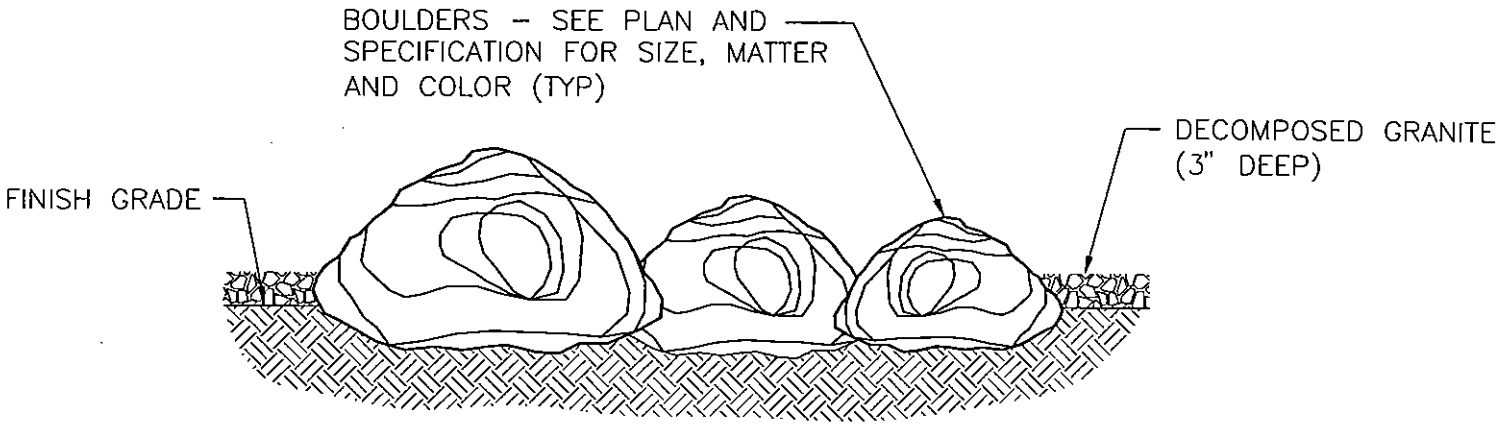

NOTE:
PLACE BOULDER SUCH THAT ¼ OF THE MASS OF EACH BOULDER IS BELOW FINISH GRADE.

BOULDER INSTALLATION

NOT TO SCALE LS-20 071003

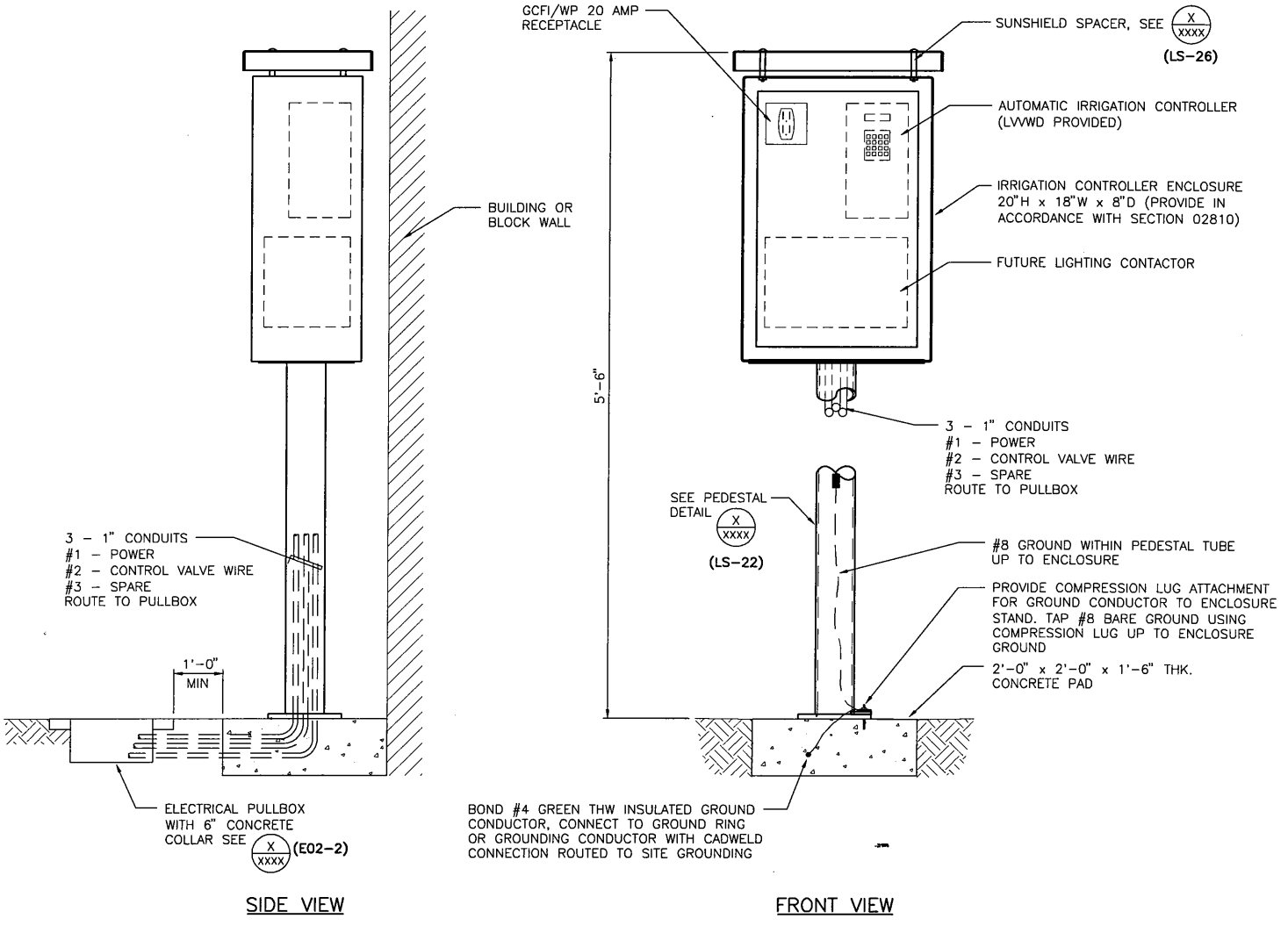

IRRIGATION CONTROLLER ENCLOSURE DETAIL

NOT TO SCALE LS-21 081203

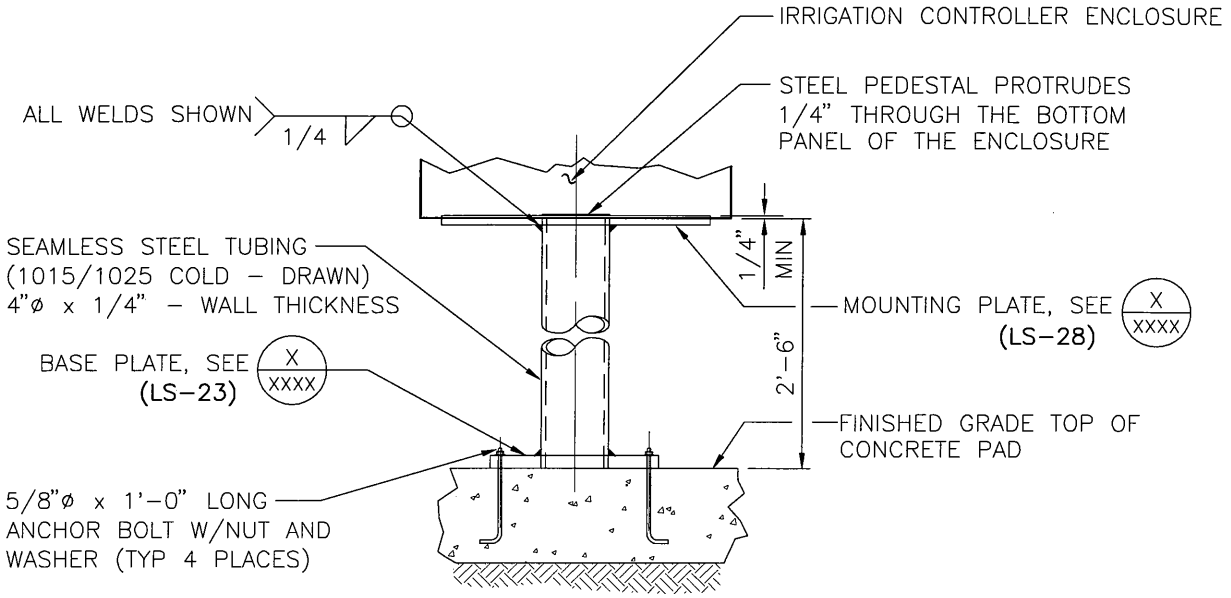

IRRIGATION CONTROLLER ENCLOSURE PEDESTAL DETAIL

NOT TO SCALE LS-22 08~~1~~203

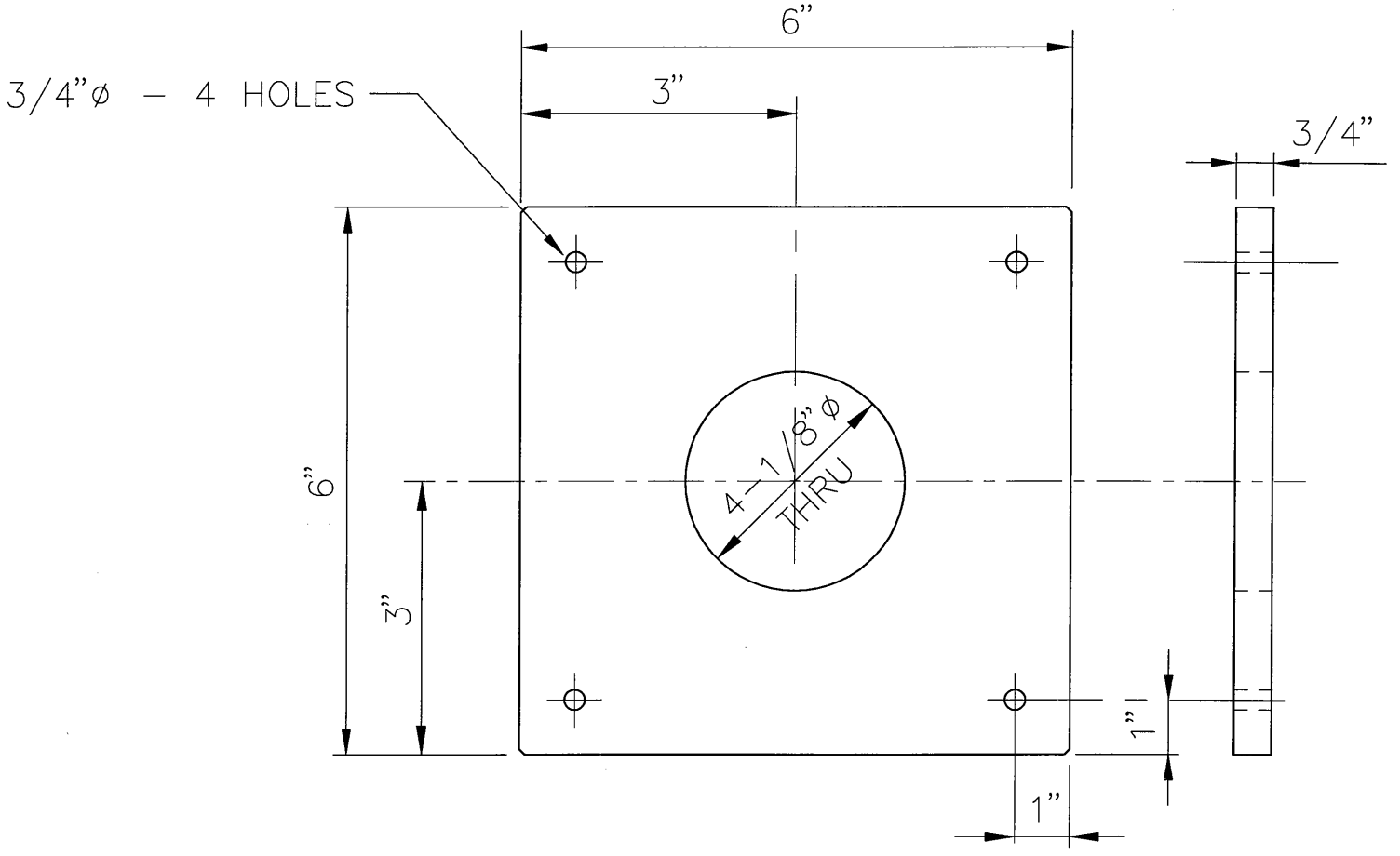

IRRIGATION CONTROLLER ENCLOSURE BASE PLATE

NOT TO SCALE LS–23 081203

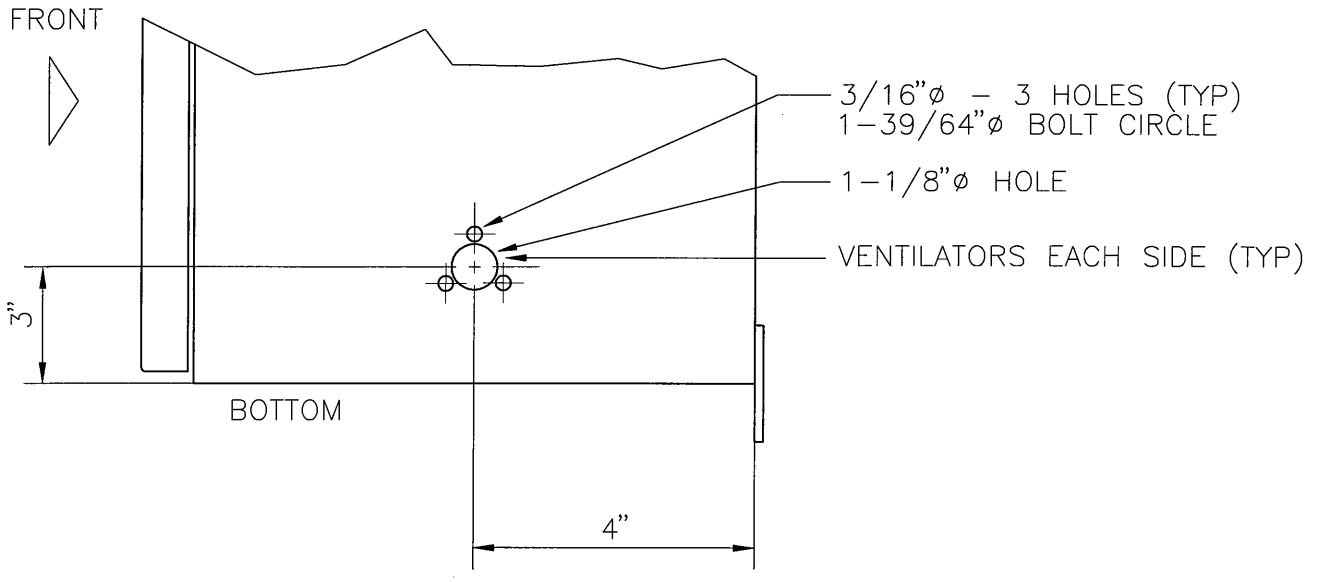

IRRIGATION CONTROLLER ENCLOSURE BOLT HOLE ALIGNMENTS (SIDE)

NOT TO SCALE LS–24 081203

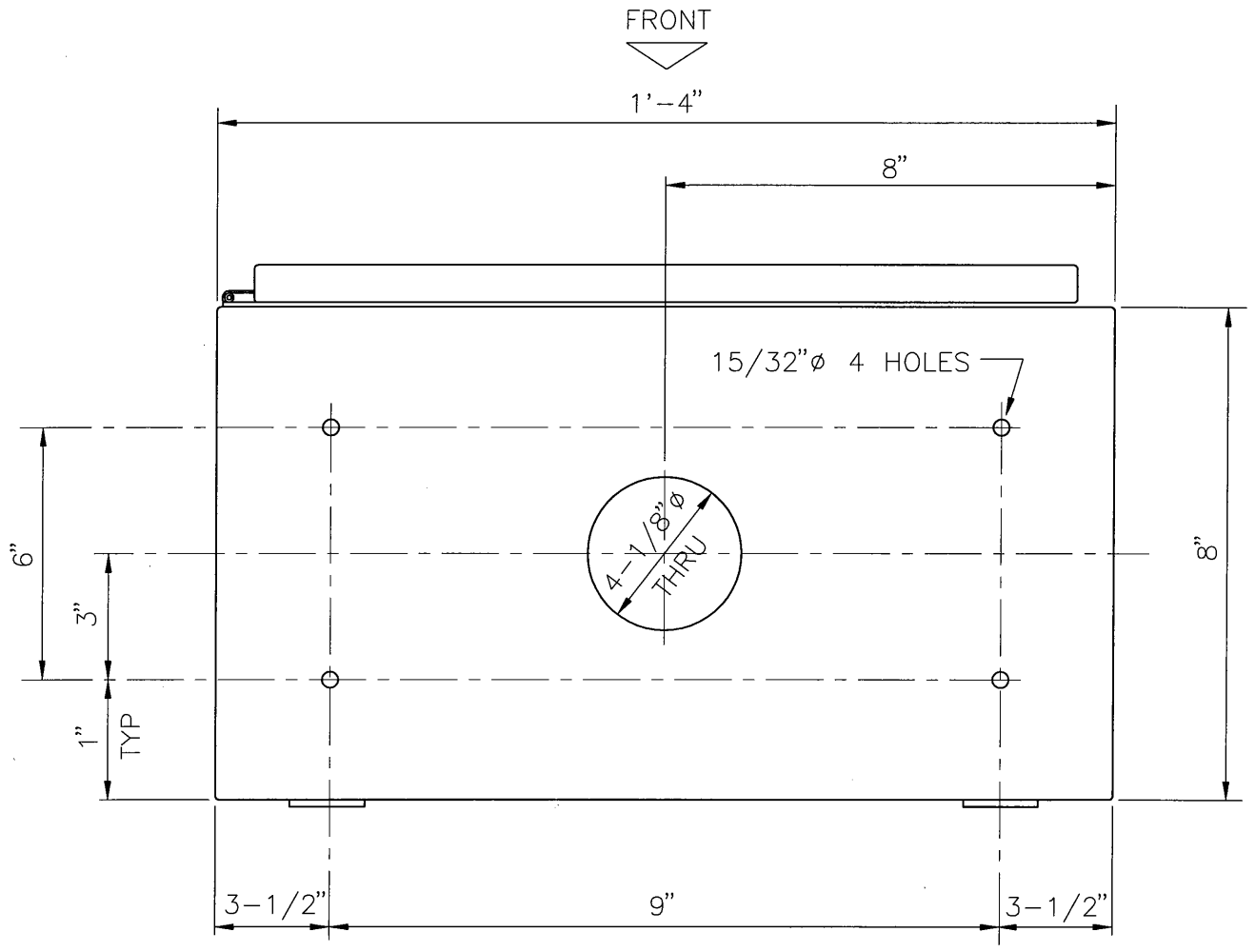

IRRIGATION CONTROLLER ENCLOSURE BOLT HOLE ALIGNMENTS (BOTTOM)

NOT TO SCALE LS-25 081203

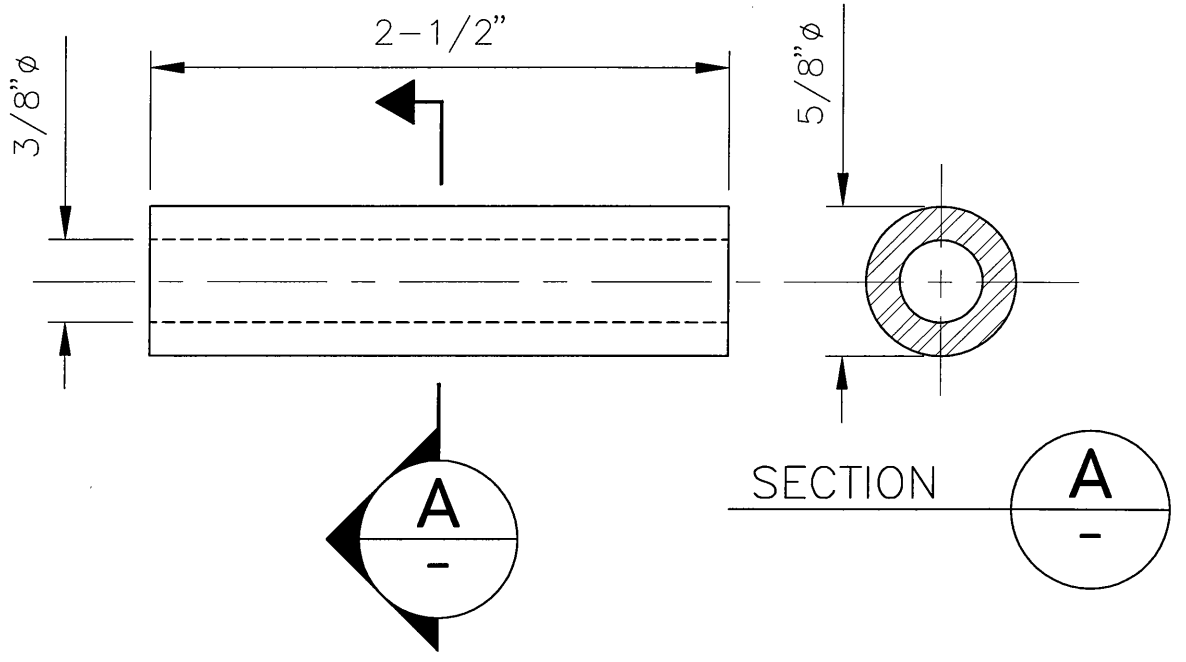

IRRIGATION CONTROLLER ENCLOSURE SUNSHIELD MOUNTING SPACERS

NOT TO SCALE LS-26 081203

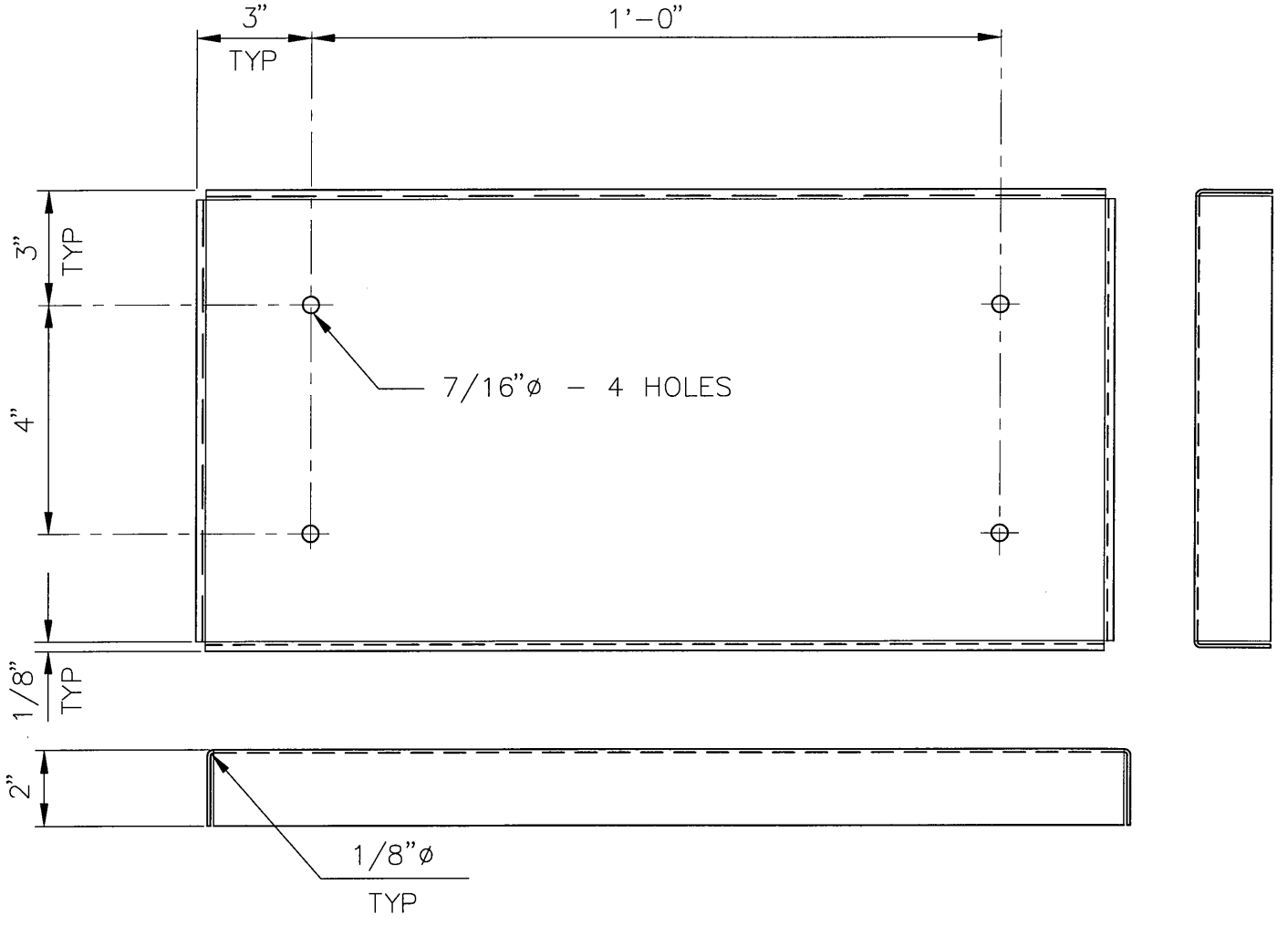

IRRIGATION CONTROLLER ENCLOSURE SUNSHIELD DETAIL

NOT TO SCALE LS-27 081203

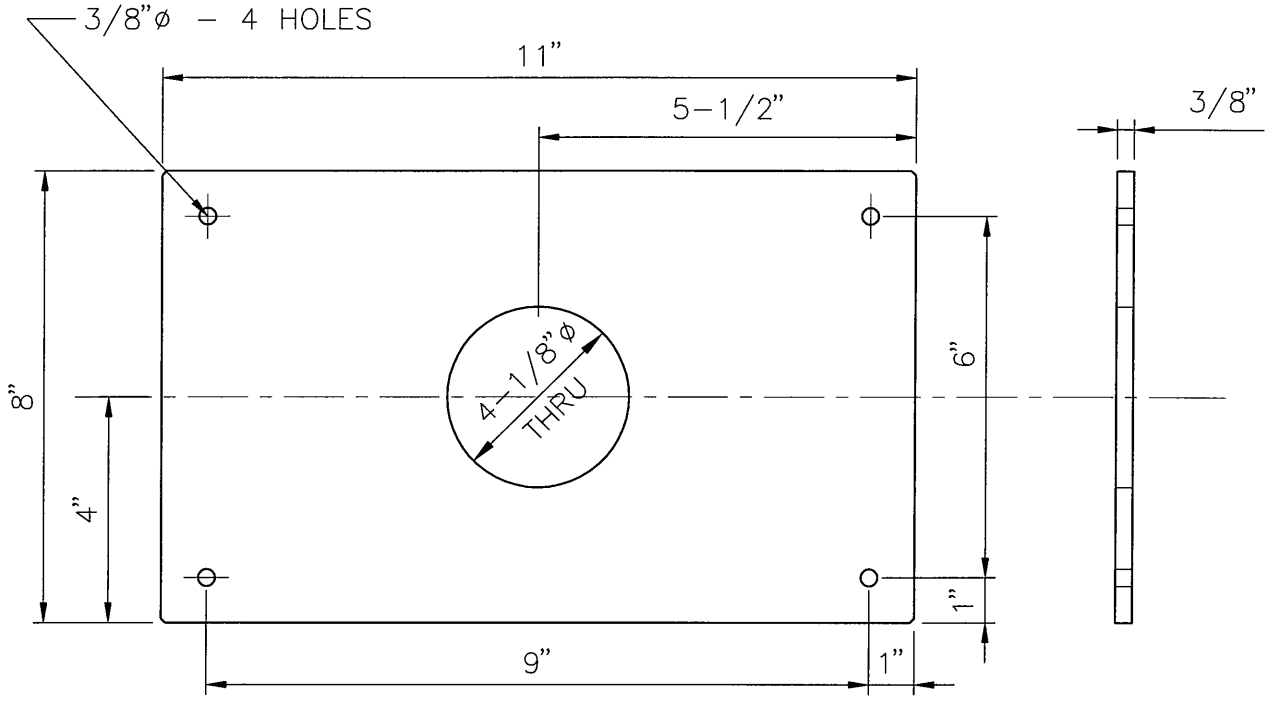

IRRIGATION CONTROLLER ENCLOSURE MOUNTING PLATE

NOT TO SCALE LS–28 081203

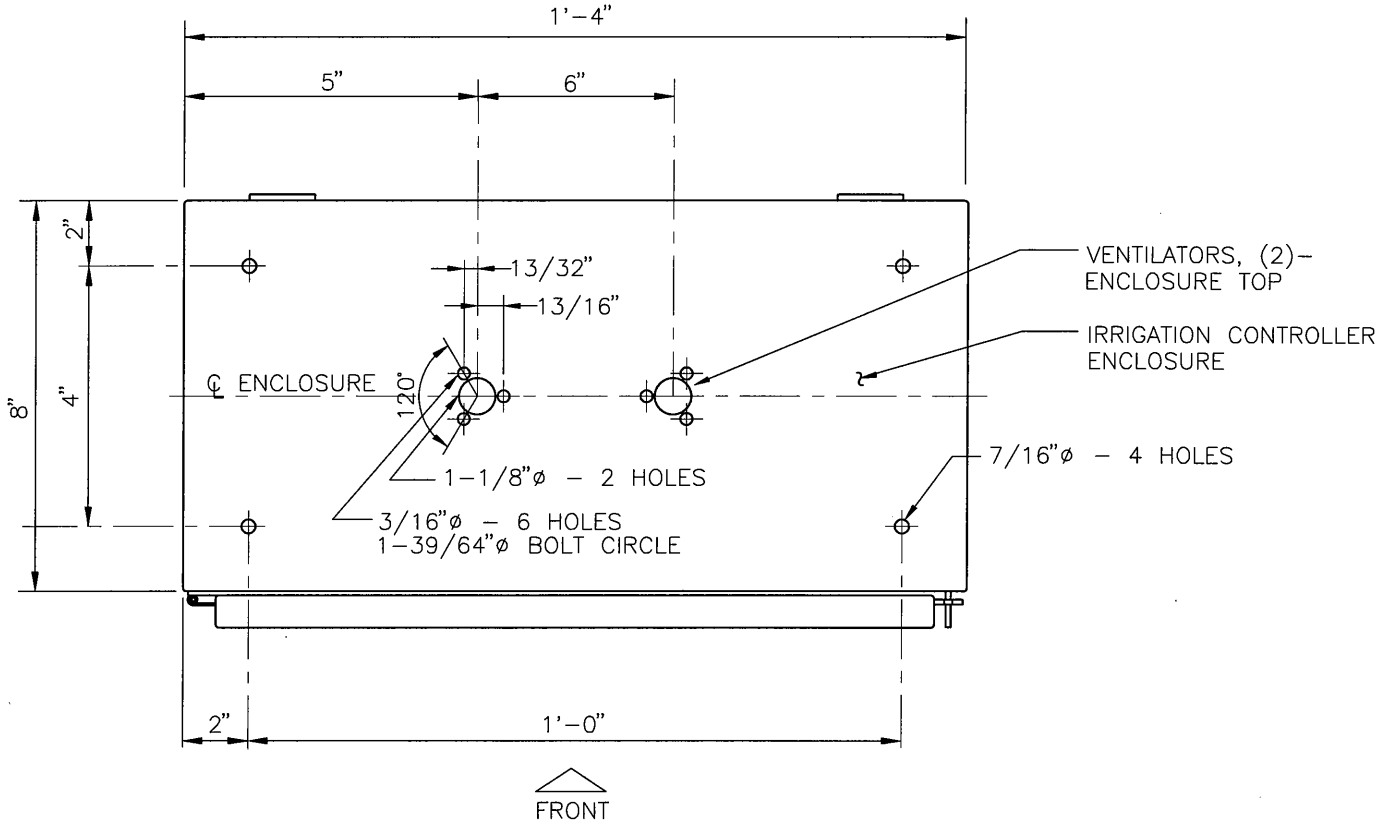

IRRIGATION CONTROLLER ENCLOSURE BOLT HOLE ALIGNMENTS (TOP)

NOT TO SCALE LS-29 081203

LS-30 081203

IRRIGATION CONTROLLER ENCLOSURE FABRICATION NOTES:

1. ALL STEEL SHAPES, PLATES AND BARS USED FOR THESE FABRICATIONS SHALL CONFORM TO THE "SPECIFICATION FOR STRUCTURAL STEEL" ASTM A-36 OR THE "SPECIFICATIONS FOR COLD-FORMED WELDED AND SEAMLESS CARBON STEEL STRUCTURAL TUBING IN ROUNDS AND SHAPES" ASTM A-501.

2. ALL WELDING SHALL BE BY THE SHIELDED ARC METHOD AND SHALL CONFORM TO THE AWS D1.1 "STRUCTURAL WELDING CODE".

3. ALL STEEL SHAPES, PLATES, BARS AND FABRICATED ASSEMBLIES SHALL BE GALVANIZED IN ACCORDANCE WITH THE "SPECIFICATION FOR ZINC (HOT-GALVANIZED) COATINGS ON PRODUCTS FABRICATED FROM ROLLED, PRESSED AND FORGED STEEL SHAPES, PLATES BARS AND STRIP" ASTM A-123, OR BY THE APPLICATION OF AN ORGANIC ZINC RICH COATING. THE ORGANIC ZINC RICH COATINGS SHALL BE "GALVANOX", "GALVOWELD", OR APPROVED EQUAL.

4. ALL BURRS SHALL BE REMOVED FROM CUT OR DRILLED STEEL SHAPES, TUBES, PLATES AND BARS.

5. ALL BOLT HOLES SHALL BE DRILLED, NOT FLAME CUT, THROUGH ALL STEEL FABRICATED PLATES. HOLES IN MATING PLATES SHALL BE MATCH DRILLED.

6. ALL THREADED NUTS AND BOLTS SHALL CONFORM TO ASTM A-307, GRADE "B" AND SHALL BE ZINC PLATED IN ACCORDANCE WITH ASTM B-633.

7. FINISH ENTIRE ASSEMBLY W/POLYESTER POWDER COAT WHITE.

8. ALL SUNSHIELD SPACERS SHALL BE ALUMINUM TUBING (6061 OR SIMILAR).

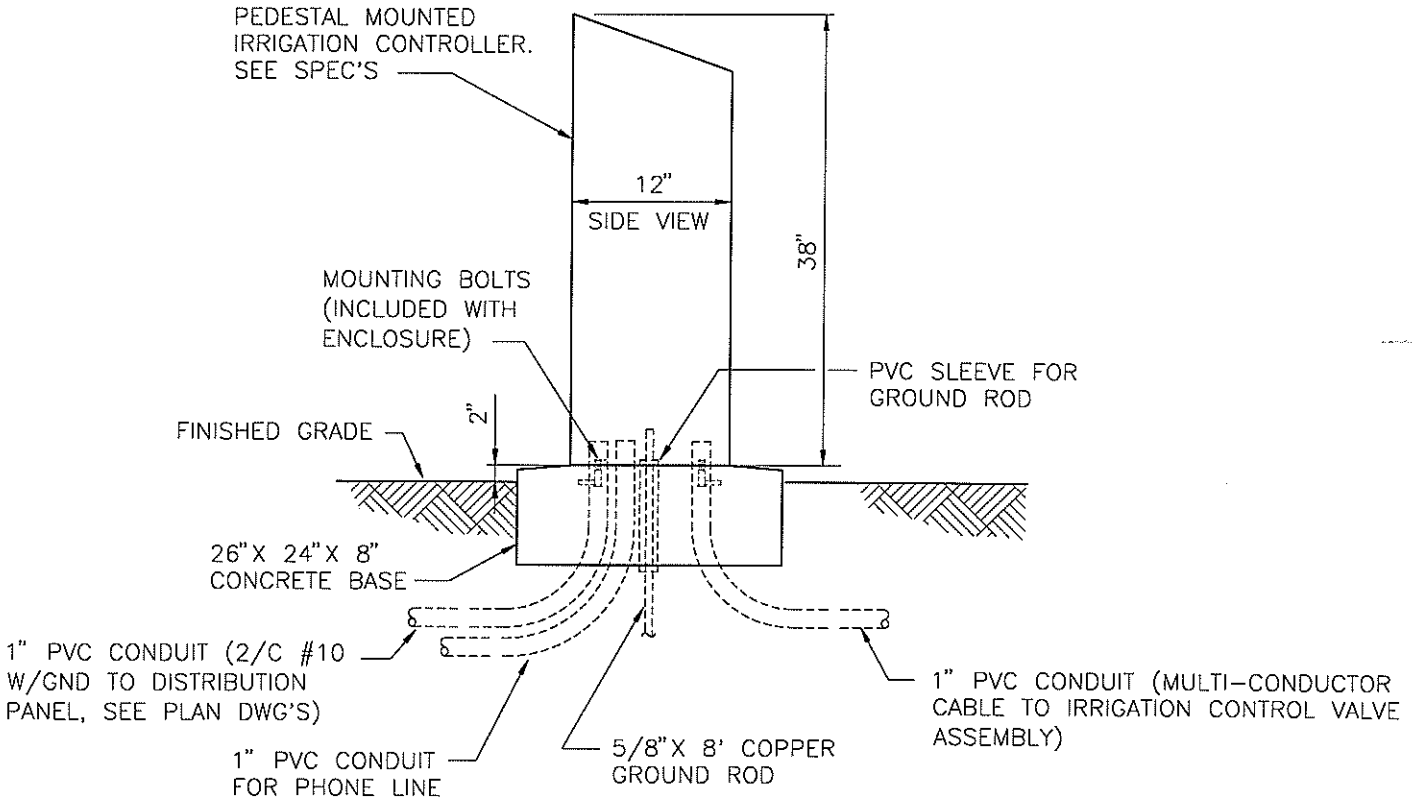

NOTES:

1. WHEN POSSIBLE THE CONTROL TIMER SHALL BE ORIENTED SUCH THAT CONTROL SCREEN IS FACING NORTH.
2. CONTROLLER TO BE USED FOR 6 STATIONS OR GREATER.

PEDESTAL MOUNTED IRRIGATION CONTROLLER

NOT TO SCALE LS-31 080305

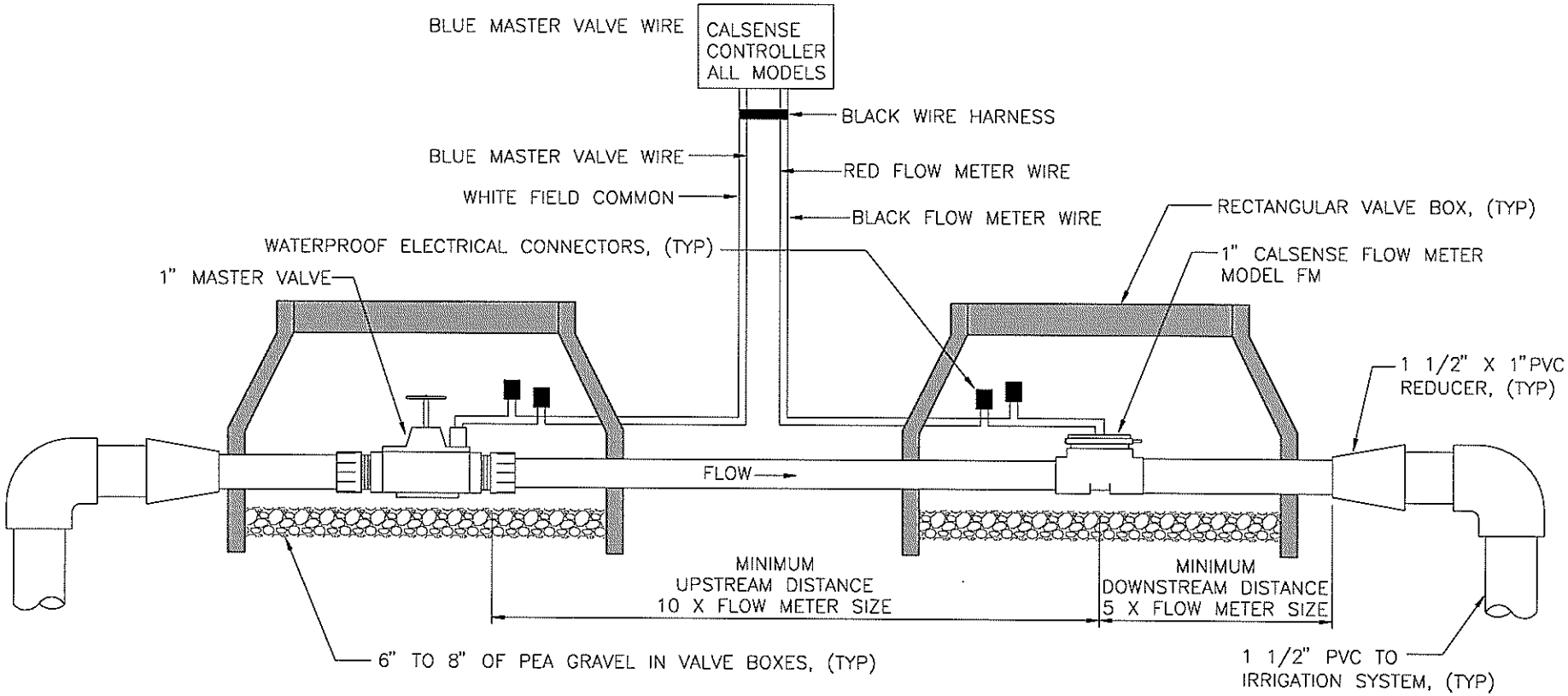

NOTES:

1. METER VALVE AND SENSOR TO BE USED FOR 6 STATIONS OR GREATOR.
2. ALL BURIED WIRES TO BE INSTALLED IN 1" PVC CONDUIT.

METER VALVE AND FLOW SENSOR DETAIL

NOT TO SCALE LS-32 080305

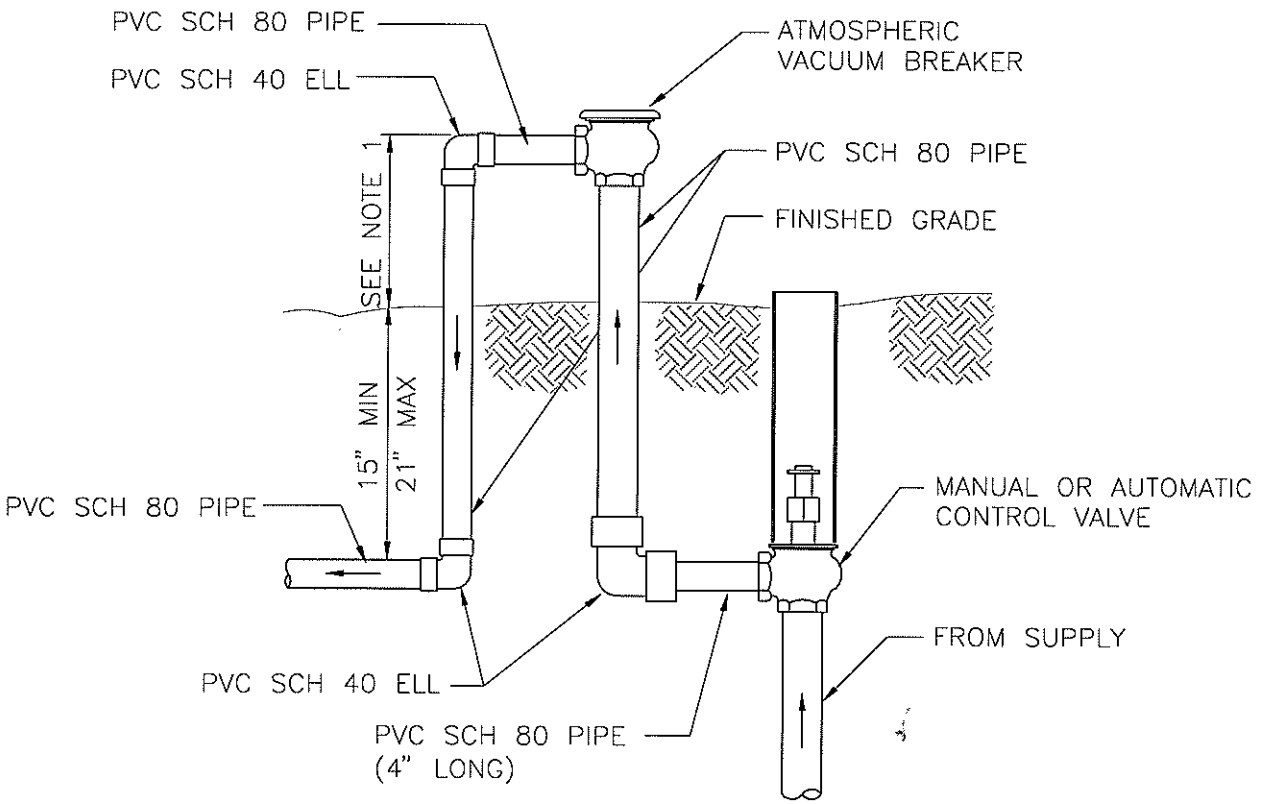

NOTES:

1. ATMOSPHERIC VACUUM BREAKERS SHALL BE INSTALLED APPROXIMATELY 6" ABOVE FINISHED GRADE AND ABOVE A SUFFICIENT NUMBER OF SPRINKLER HEADS CLOSEST TO THE VACUUM BREAKER SO THAT AT NO TIME WILL IT BE SUBJECTED TO BACK PRESSURE OR DRAINAGE.
2. CLOSE NIPPLES SHALL NOT BE USED.
3. ALL FITTINGS, INCLUDING THE ATMOSPHERIC VACUUM BREAKER SHALL NOT BE SMALLER SIZE THAN THE VALVE.

BACKFLOW PREVENTER
ATMOSPHERIC VACUUM BREAKER

NOT TO SCALE LS-33 060506

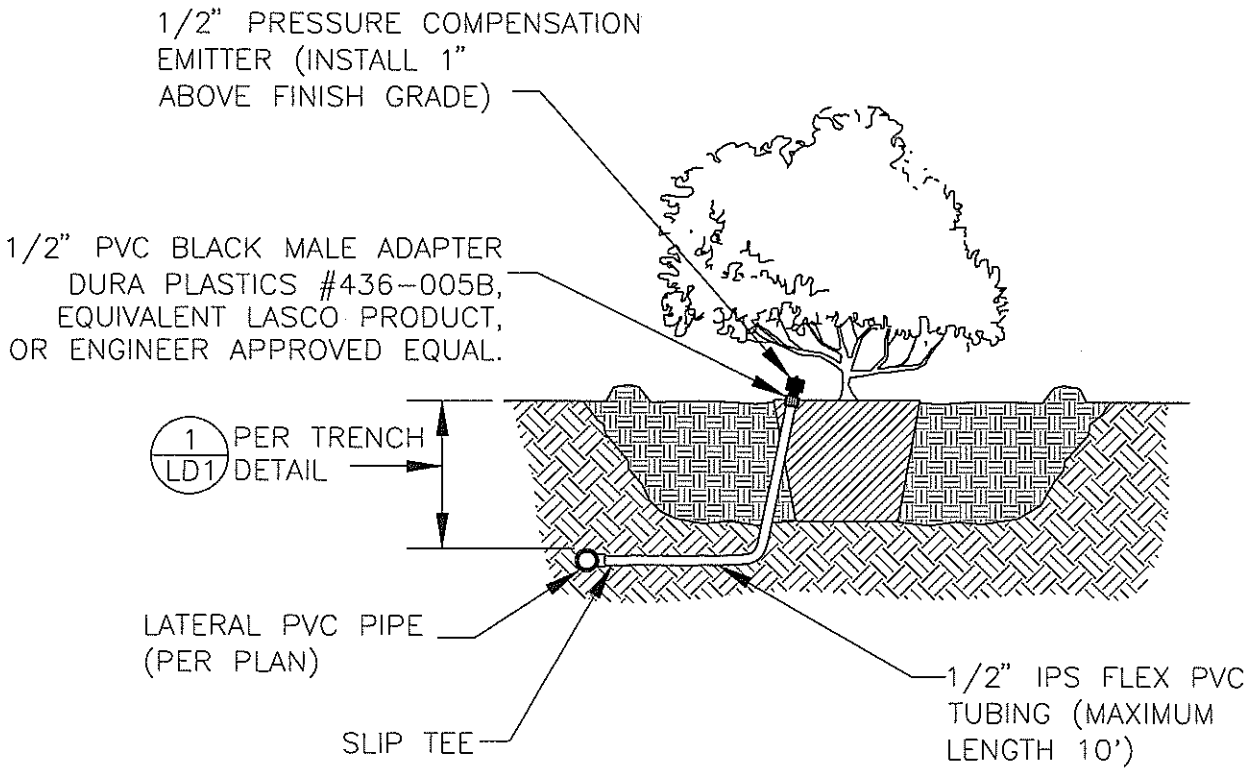

NOTES:

1. ADJACENT TREES AND SHRUBS MAY SHARE THE SAME EMITTER WHERE PATTERNS OVERLAP.

2. BEGIN PLACEMENT OF EMITTERS ADJACENT TO ROOT BALL OF PLANT AND WORK OUTWARD IN ALL DIRECTIONS UNTIL THE REQUIRED NUMBER OF EMITTERS PER PLANT IS OBTAINED.

EMITTER INSTALLATION DETAIL

NOT TO SCALE LS-34 011107

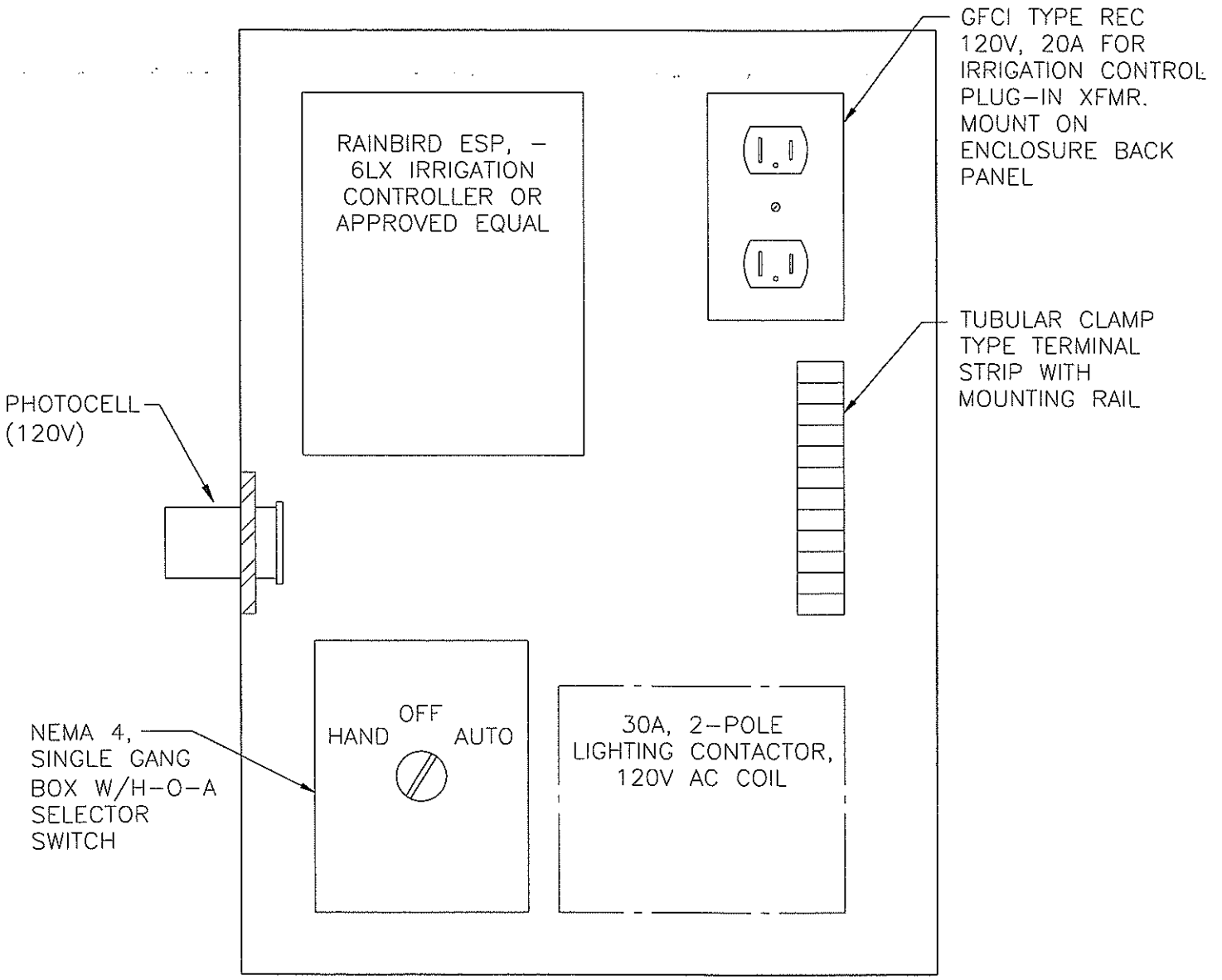

IRRIGATION/LIGHTING CONTROL ENCLOSURE

NOT TO SCALE

LS-35 011107

LAS VEGAS VALLEY WATER DISTRICT
DESIGN DETAIL STANDARDS

TABLE OF CONTENTS

DESCRIPTION	REV. DATE	DWG NO.
MISCELLANEOUS		
LVVWD Site Facility Sign	12-02-09	MS01-1
General Notes for Safety and Compliance Signs	12-01-09	MS02-1
Compliance Signs - Steel	12-01-09	MS03-1
ANSI Safety Signs	12-01-09	MS04-1
Confined Space Entry Sign	12-01-09	MS05-1
No Dumping Sign	12-01-09	MS06-1
No Trespassing Sign	12-01-09	MS07-1
Restricted Vehicle Access Sign	12-01-09	MS08-1
Sodium Hypochlorite Sign	12-01-09	MS09-1
Exit and Not an Exit Signs	12-01-09	MS10-1
Fire Extinguisher Sign	12-01-09	MS11-1
Material Hazard Identification Sign	12-01-09	MS12-1
Confined Space Entry Tag	12-01-09	MS13-1
Safety Signage Location Plan – Example Only	12-01-09	MS14-1

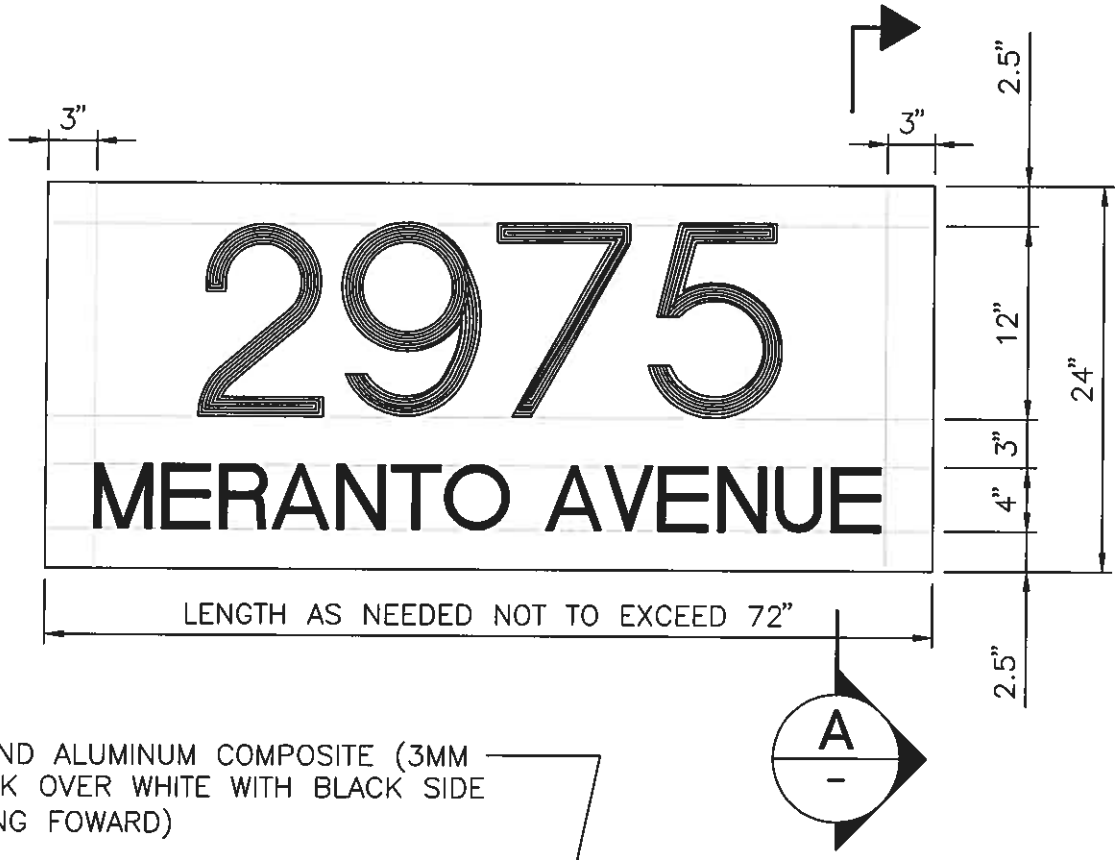

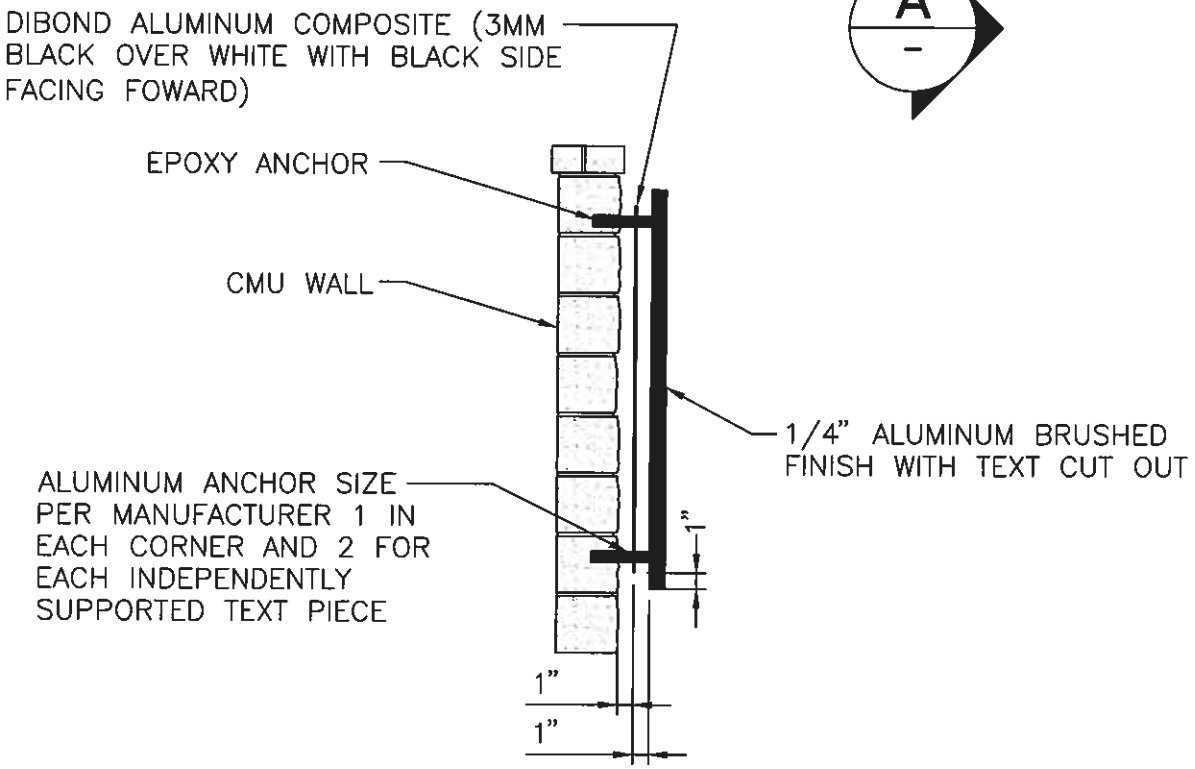

SECTION A -

LVWD SITE FACILITY SIGN

NOT TO SCALE MS01-1 120209

GENERAL NOTES FOR SAFETY AND COMPLIANCE SIGNS:

MS02-1 120109

1. INDOOR SIGNS SHALL BE MADE OF RIGID POLYETHYLENE PLASTIC .055" THICK WITH 4 EACH 3/16" DIA MOUNTING HOLES.
2. OUTDOOR SIGNS SHALL BE MADE OF ALUMINUM .040" THICK WITH 3/16" DIA HOLES, OR STEEL 18 GAUGE THICK WITH 3/8" DIA HOLES-CENTERED (SEE DETAILS).
3. OUTDOOR STEEL OR ALUMINUM SIGNS SHALL BE SURFACE MOUNTED TO WALLS, DOORS, CABINETS AND STEEL CHANNEL SIGN POSTS (STEEL SIGNS ONLY). ALL SCREW AND BOLTED FASTENERS SHALL BE NON-CORROSIVE.
4. SIGN COATINGS SHALL BE BAKED ENAMEL AND VANDAL-RESISTANT. COLORS SHALL BE IN ACCORDANCE WITH ANSI STANDARDS OR AS APPROVED BY THE ENGINEER.
5. ALL SIGNS SHALL BE INSTALLED PLUMB AND LEVEL.
6. AN ADDITIONAL SIGN POST IS REQUIRED FOR SIGNS GREATER THAN 20 INCHES IN WIDTH.

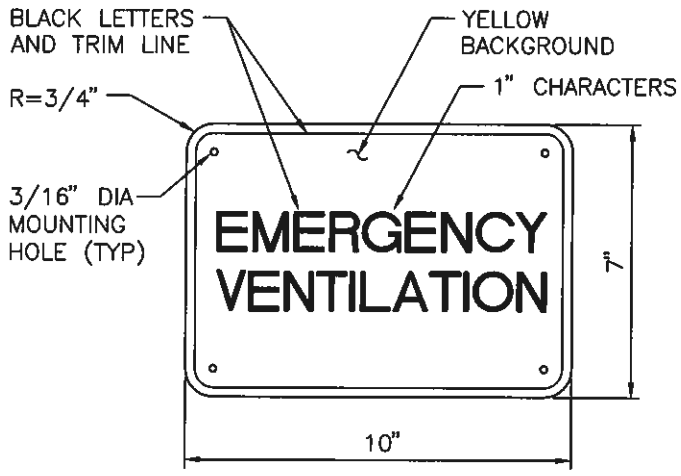

NOTE:

FASTEN SIGN ADJACENT TO EXHAUST FAN ON EXTERIOR OF DISINFECTION BUILDING.

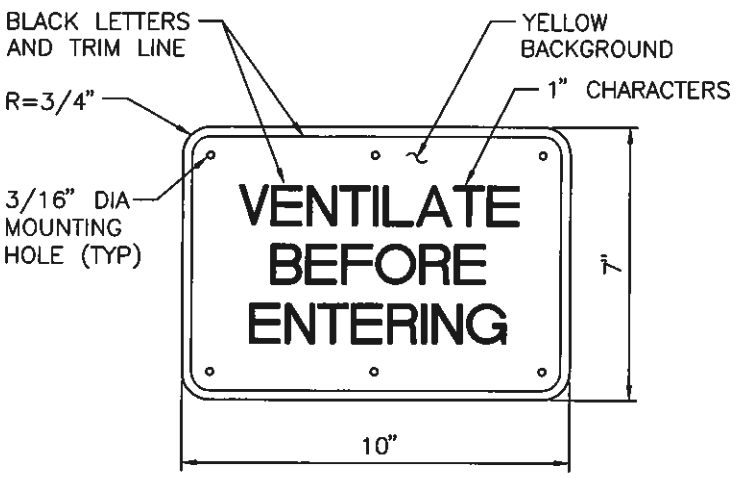

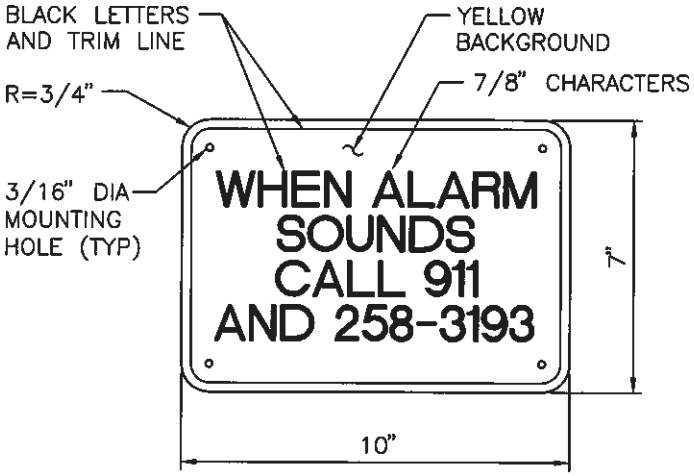

NOTE:

FASTEN SIGN ADJACENT TO EXTERIOR FIRE ALARM BEACON ON BUILDING.

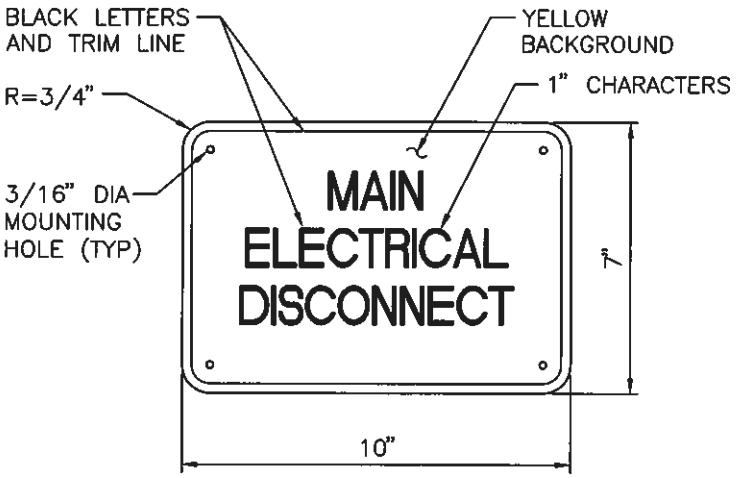

NOTE:

FASTEN SIGN TO EXTERIOR WALL OF ELECTRICAL BUILDING NEAREST TO DISCONNECT.

COMPLIANCE SIGNS - STEEL

NOT TO SCALE MS03-1 120109

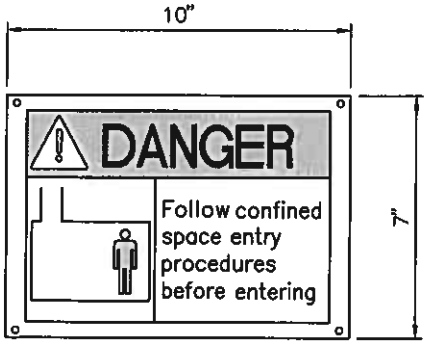

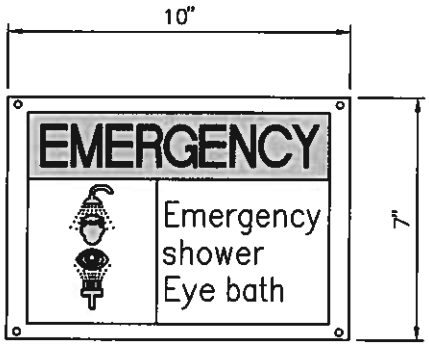

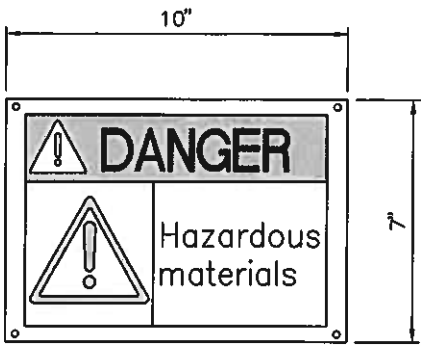

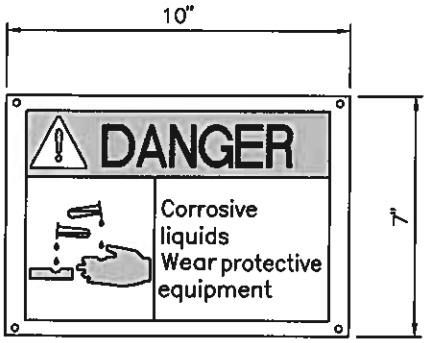

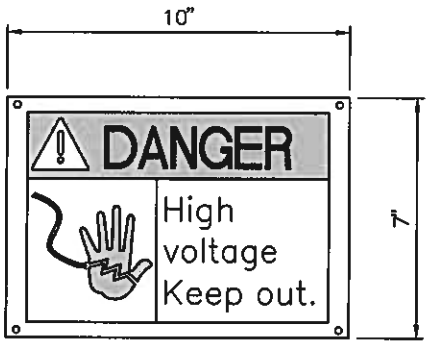

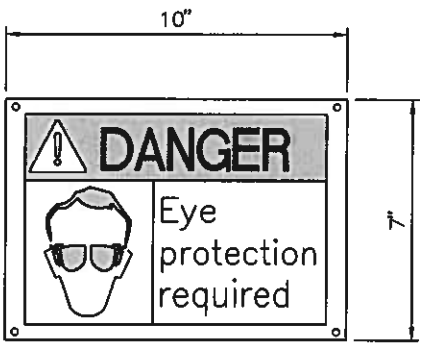

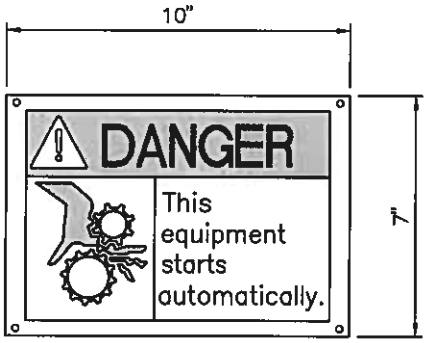

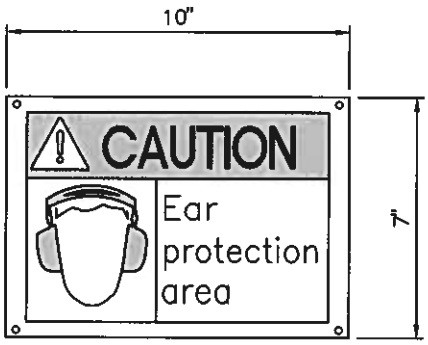

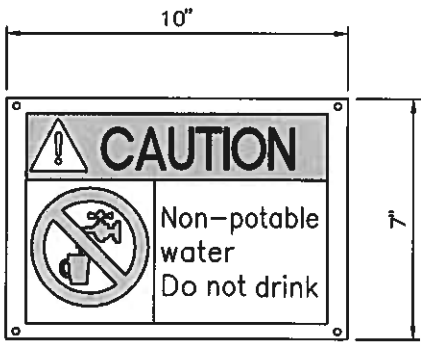

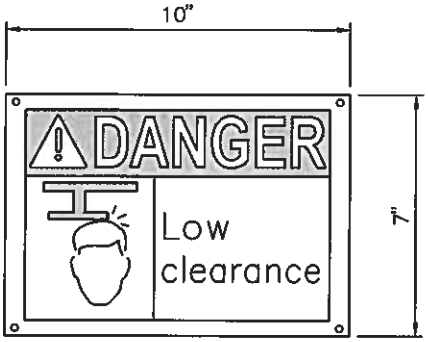

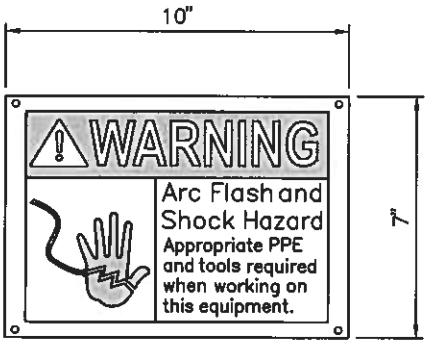

NOTE:
ALL MOUNTING HOLES TO BE 3/16" DIA (TYP)

ANSI SAFETY SIGNS

NOT TO SCALE MS04-1 120109

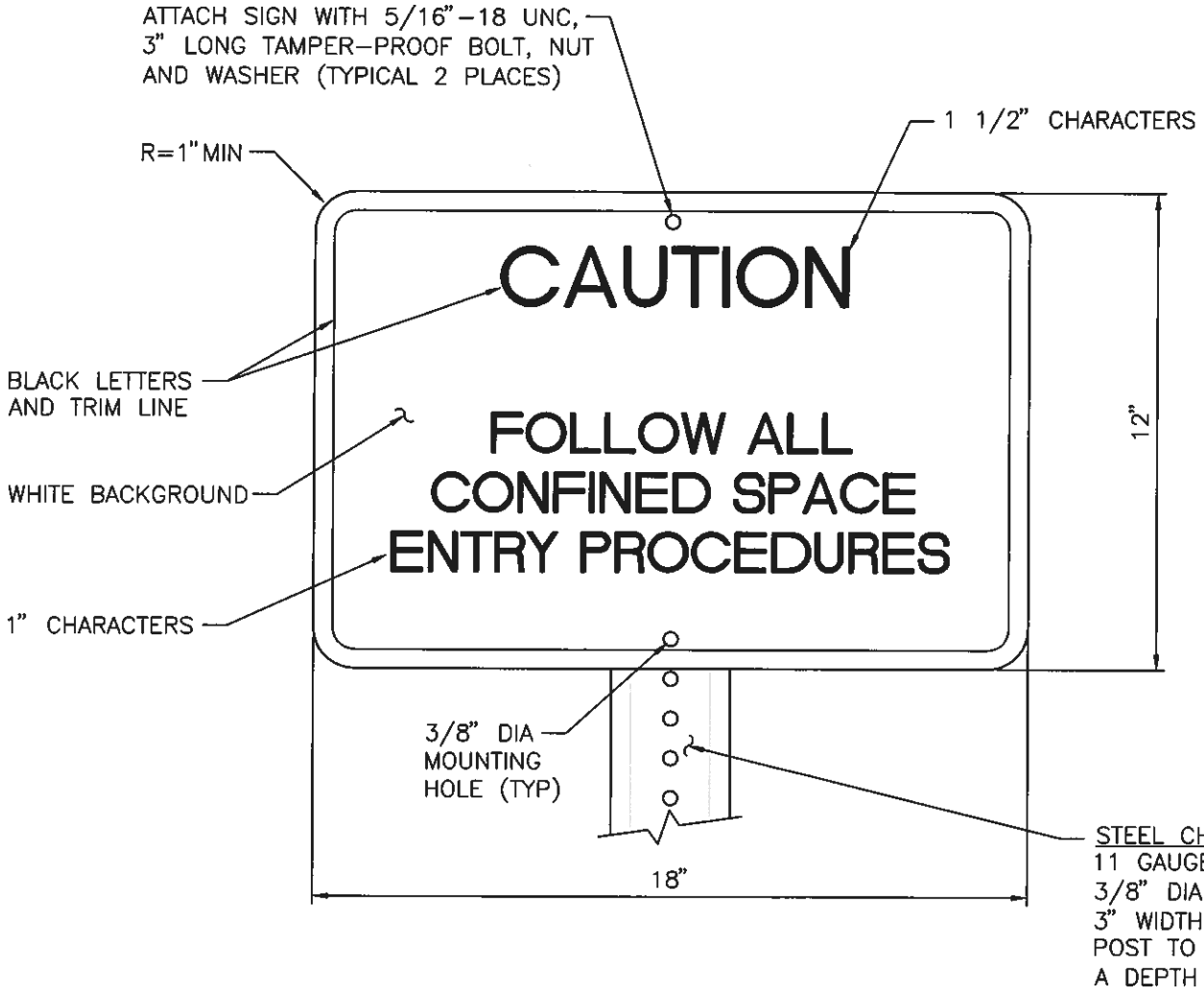

CONFINED SPACE ENTRY SIGN

NOT TO SCALE MS05-1 120109

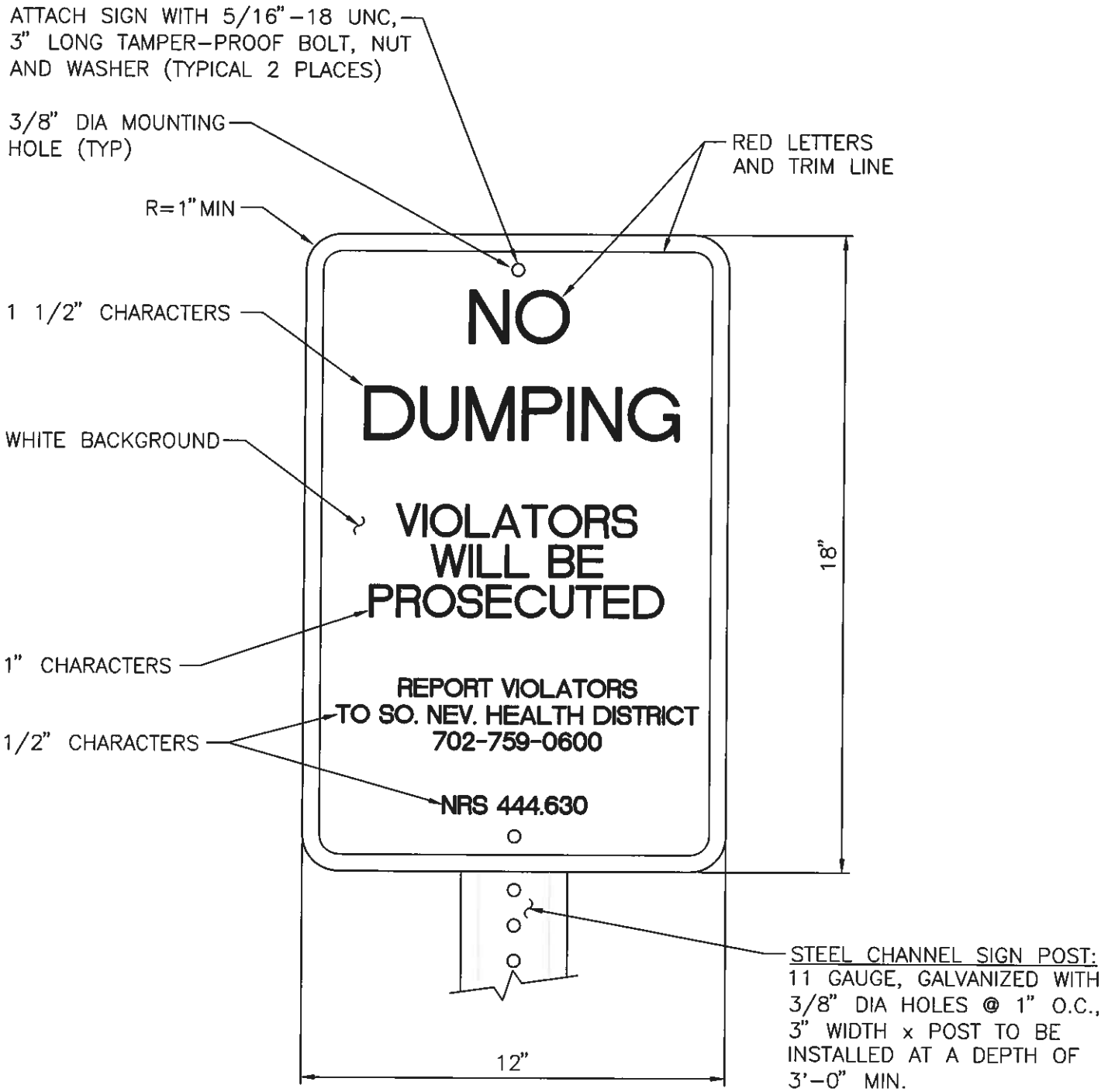

NOTE:

THE SIGNS SHALL BE POST MOUNTED AT 200' INTERVALS ALONG THE SITE PROPERTY LINE.

NO DUMPING SIGN

NOT TO SCALE MS06-1 120109

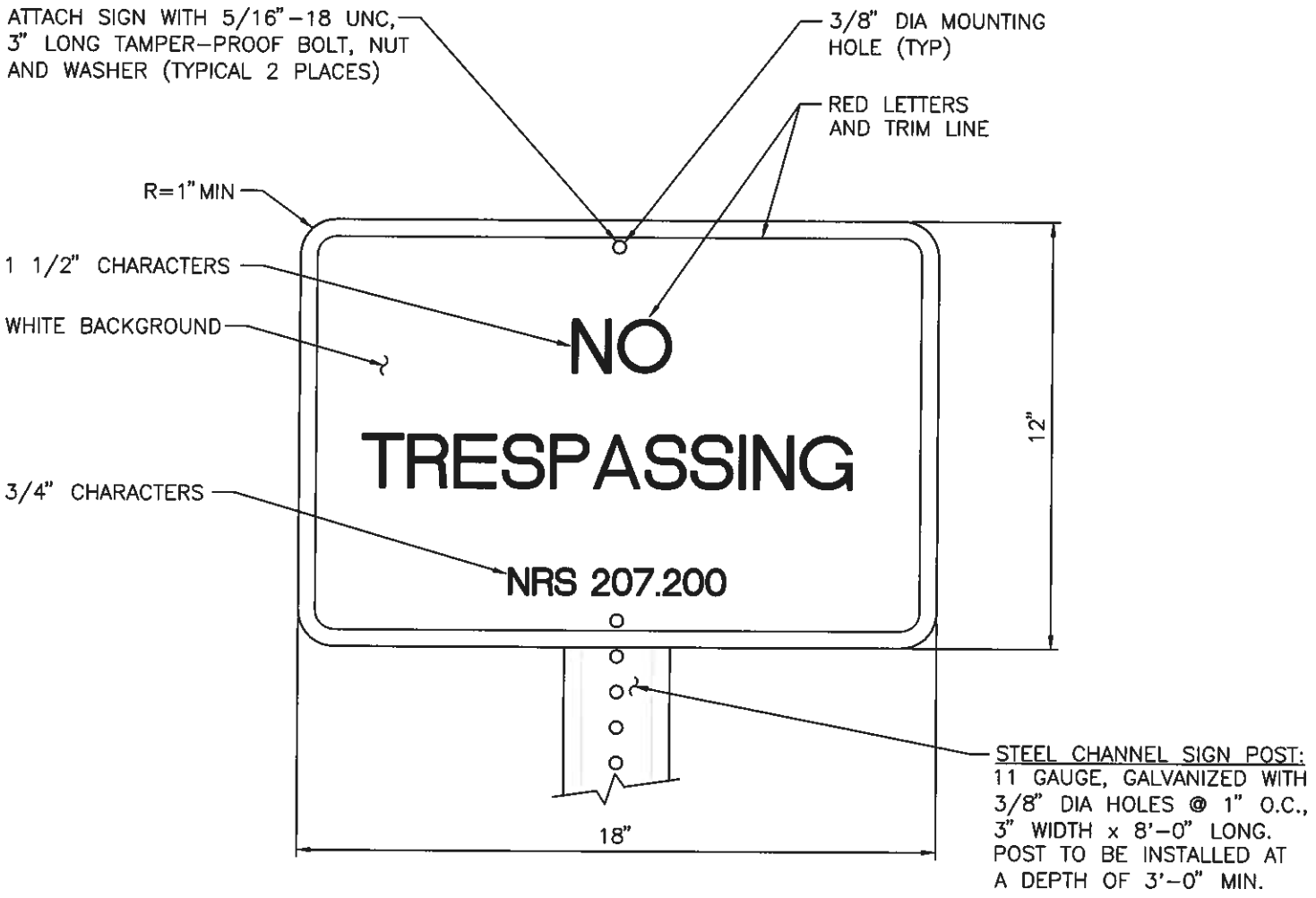

NOTE:

THE SIGNS SHALL BE POST MOUNTED AT 200' INTERVALS ALONG THE SITE PROPERTY LINE.

NO TRESPASSING SIGN

NOT TO SCALE

MS07-1 120109

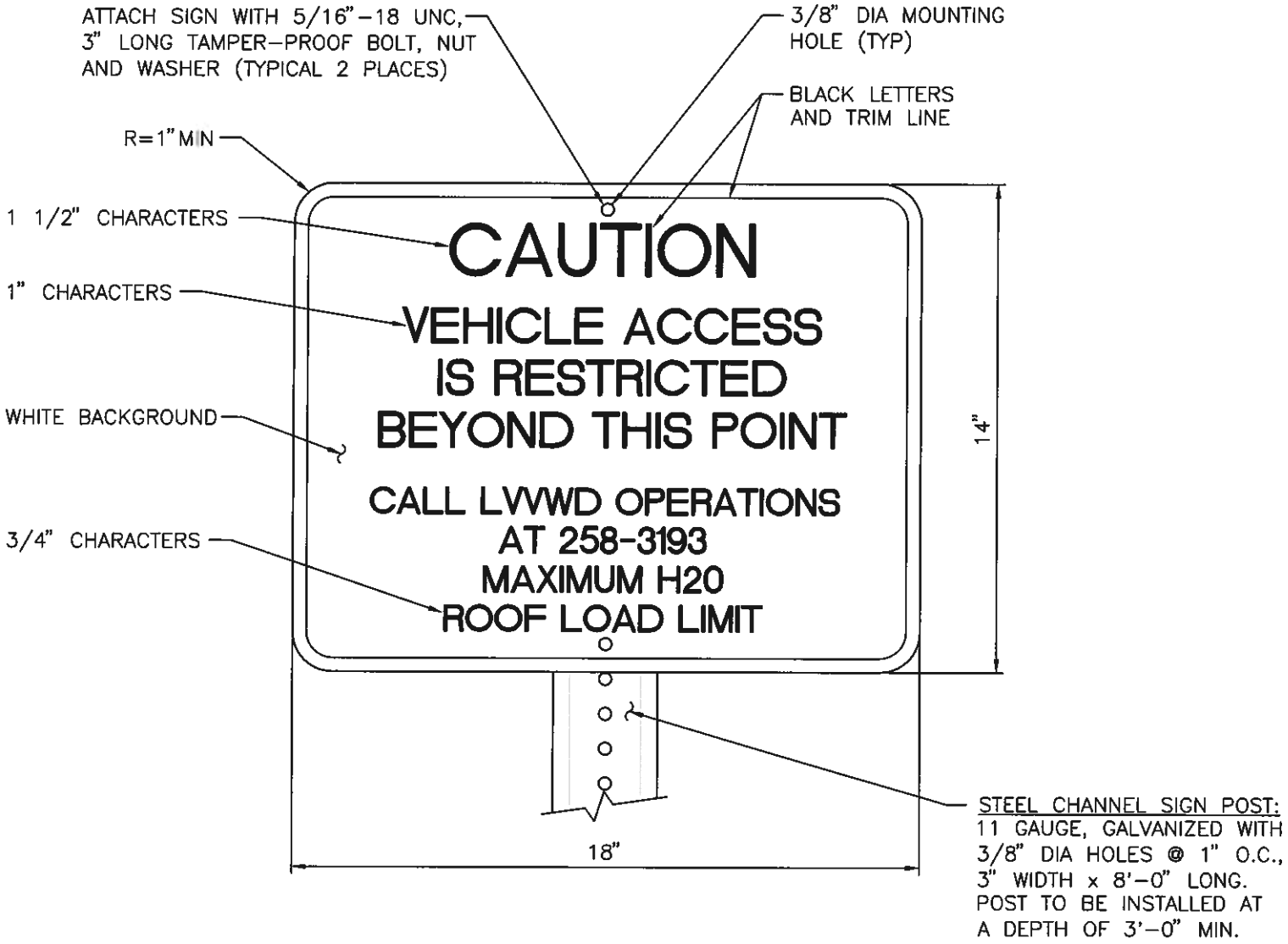

RESTRICTED VEHICLE ACCESS SIGN

NOT TO SCALE

MS08-1 120109

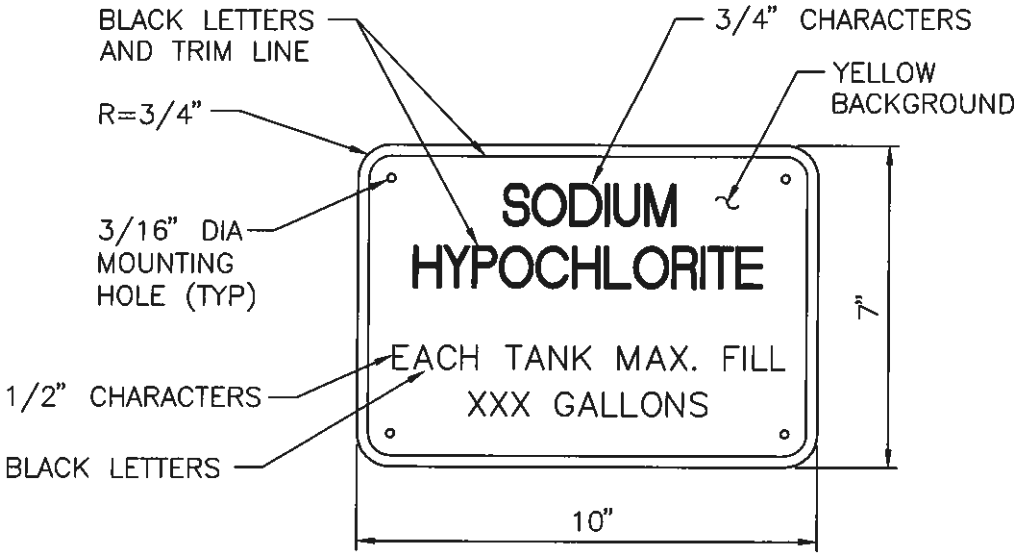

NOTE:

FASTEN SIGN TO EXTERIOR WALL OF DISINFECTION BUILDING ABOVE THE FILL STATION QUICK-CAM FEMALE COUPLERS.

SODIUM HYPOCHLORITE SIGN

NOT TO SCALE MS09-1 120109

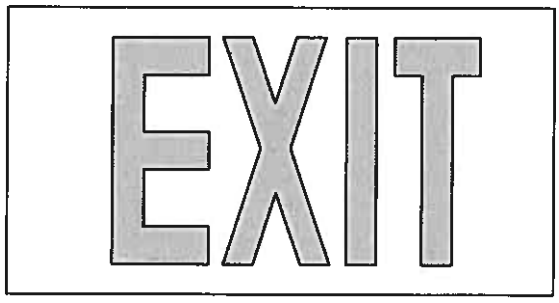

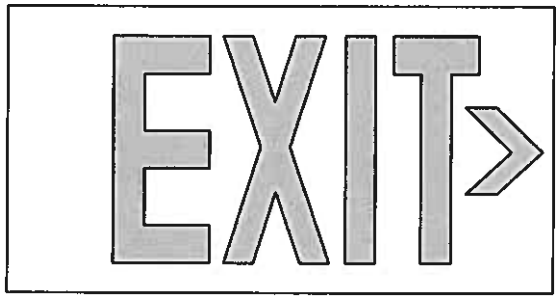

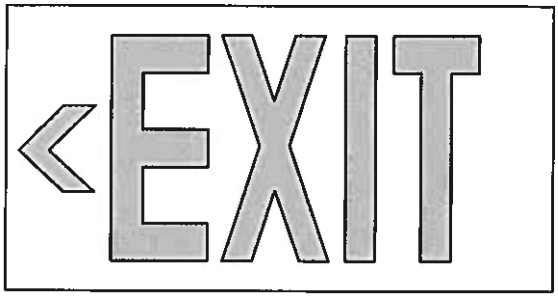

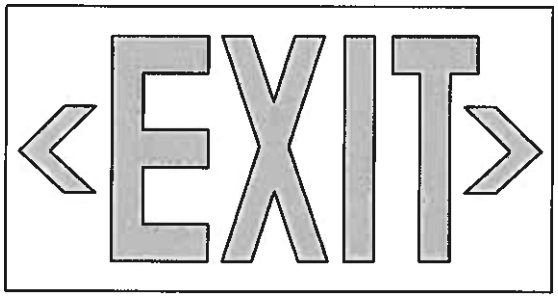

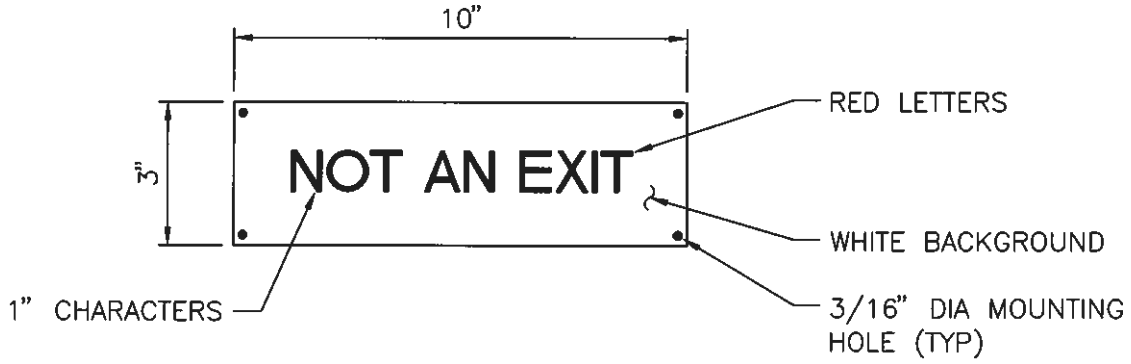

NOTES:

1. ALL EXIT SIGNS SHALL BE EITHER INTERNALLY ILLUMINATED AND LISTED WITH UL924 OR ILLUMINATED BY AN EXTERNAL LIGHT SOURCE AND WALL MOUNTED ABOVE THE EXIT DOOR FRAME.
2. PHOTOLUMINESCENT EXIT SIGNS ARE PROHIBITED.
3. INSTALL NOT AN EXIT SIGN ON ANY DOOR THAT DOES NOT LEAD TO A SAFE EXIT.

EXIT AND NOT AN EXIT SIGNS

NOT TO SCALE MS10-1 120109

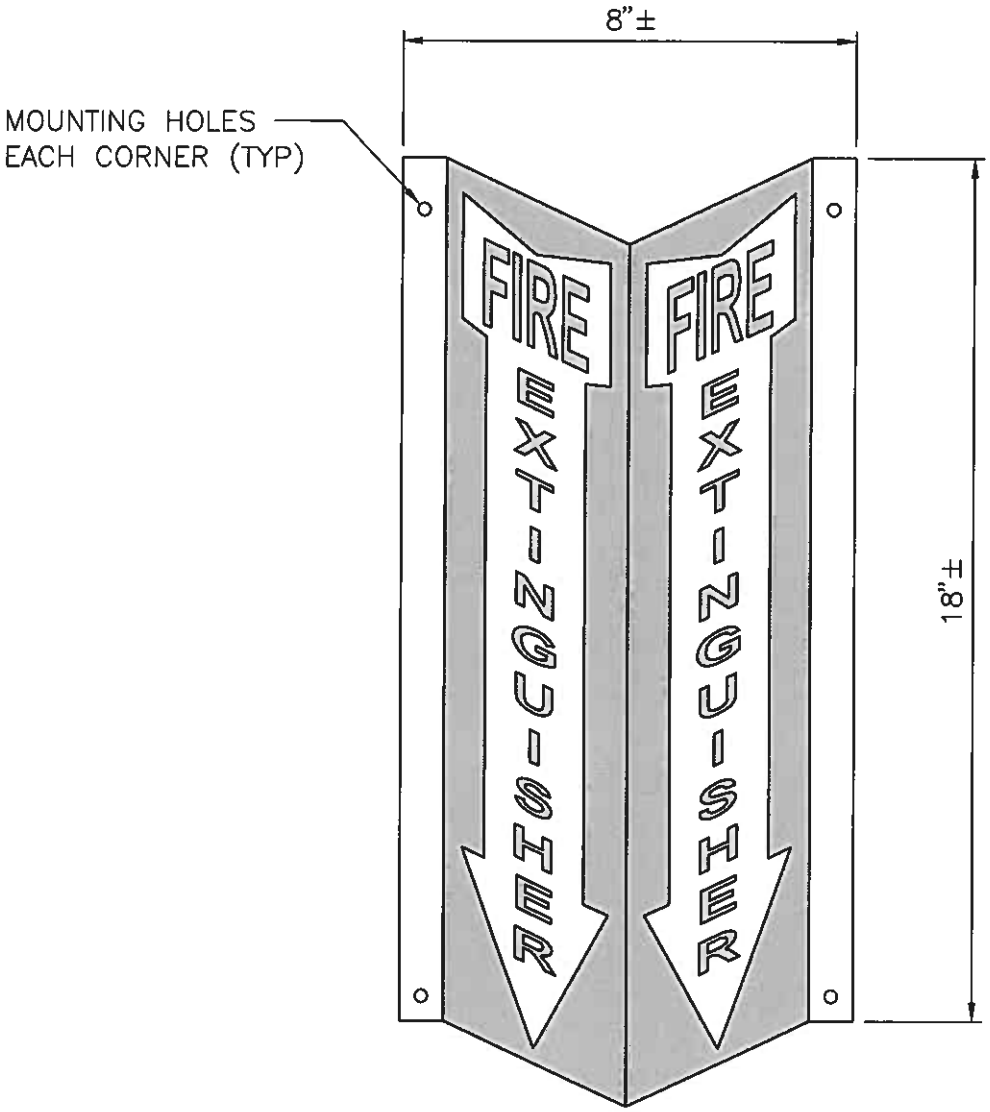

NOTES:

1. ATTACH SIGN ABOVE EACH FIRE EXTINGUISHER AT ALL LOCATIONS.
2. SIGN SHALL BE LUMINOUS PER ASTM E2030.

FIRE EXTINGUISHER SIGN

NOT TO SCALE MS11–1 120109

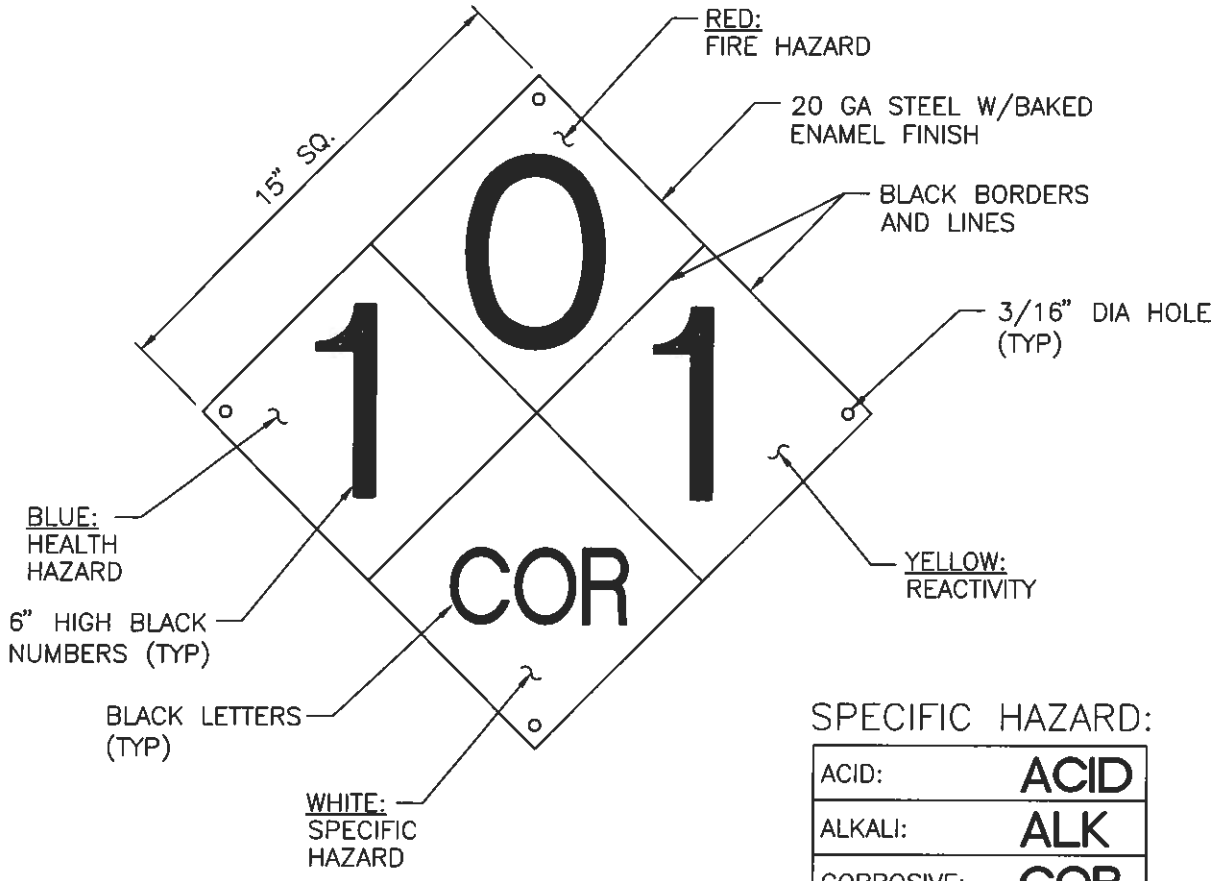

SPECIFIC HAZARD:

ACID:	ACID
ALKALI:	ALK
CORROSIVE:	COR
OXIDIZER:	OXY
RADIOACTIVE:	☢
USE NO WATER:	W

HAZARD TYPES AND LEVELS:

NO.	BLUE: HEALTH HAZARD	RED: FIRE HAZARD	YELLOW: REACTIVITY
0	NORMAL MATERIAL	WILL NOT BURN	STABLE
1	SLIGHTLY HAZARDOUS	ABOVE 200° F.	UNSTABLE IF HEATED
2	HAZARDOUS	ABOVE 100° F. NOT EXCEEDING 200° F.	VIOLENT CHEMICAL CHANGE
3	EXTREME DANGER	BELOW 100° F.	SHOCK AND HEAT MAY DETONATE
4	DEADLY	BELOW 73° F.	MAY DETONATE

NOTES:

1. DIAMOND HAZARD MATERIALS SIGN SHALL CORRECTLY IDENTIFY THE HAZARDOUS MATERIALS CONTAINED WITHIN THE DISINFECTION ROOM IN ACCORDANCE WITH NFPA 704.
2. DIAMOND SIGN SHALL BE SURFACE MOUNTED ADJACENT TO THE DISINFECTION ROOM ENTRY DOOR.

MATERIAL HAZARD IDENTIFICATION SIGN

NOT TO SCALE

MS12-1 120109

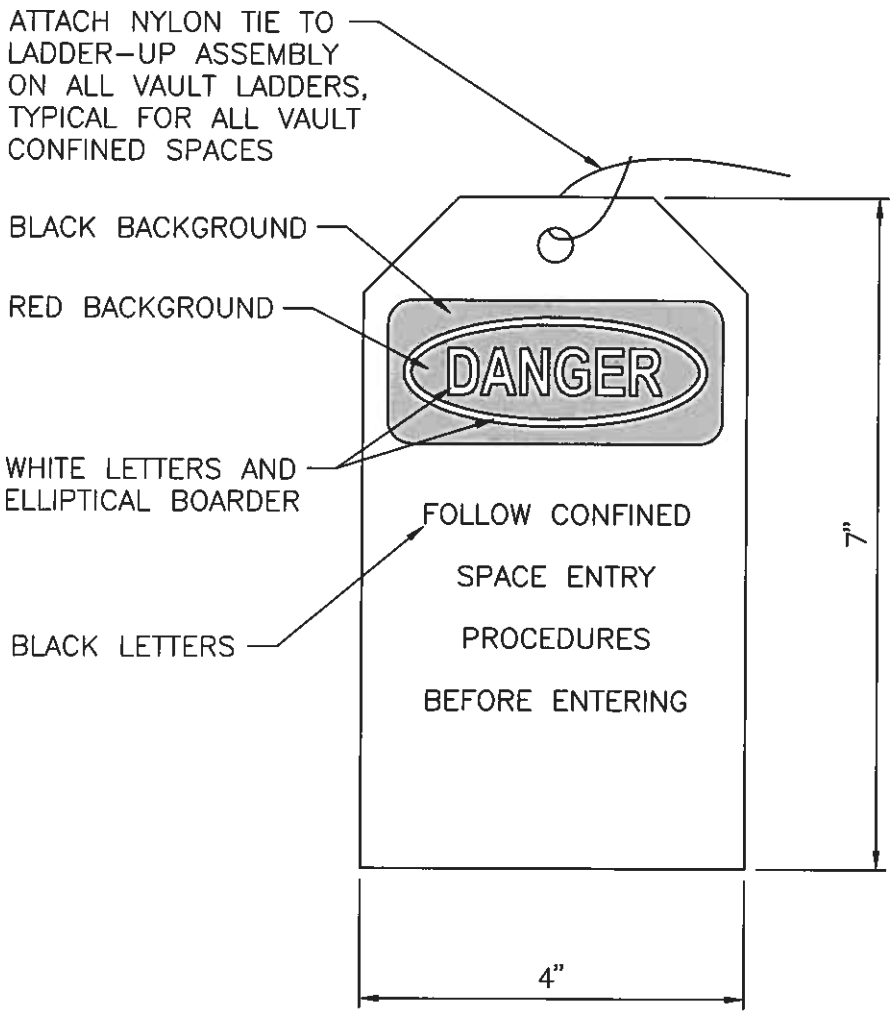

CONFINED SPACE ENTRY TAG

NOT TO SCALE

MS13-1 120109

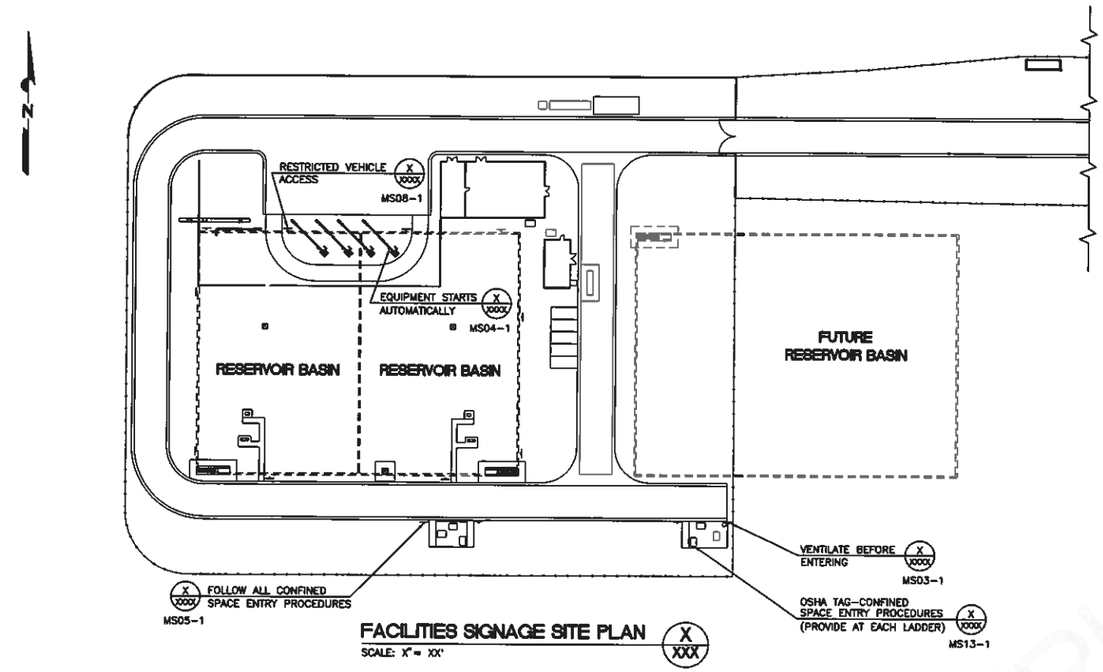

FACILITIES SIGNAGE SITE PLAN

SCALE: X" = XX'

NOTES:

1. WHERE SIGN CALL-OUTS SHOW A DIMENSION "AFF" (ABOVE FINISHED FLOOR), THE DISTANCE IS MEASURED FROM THE BUILDING FINISHED FLOOR TO THE BOTTOM OF THE SIGN.
2. THIS PLAN DOES NOT INCLUDE WARNING SIGNS THAT ARE REQUIRED BY ELECTRICAL CODES.

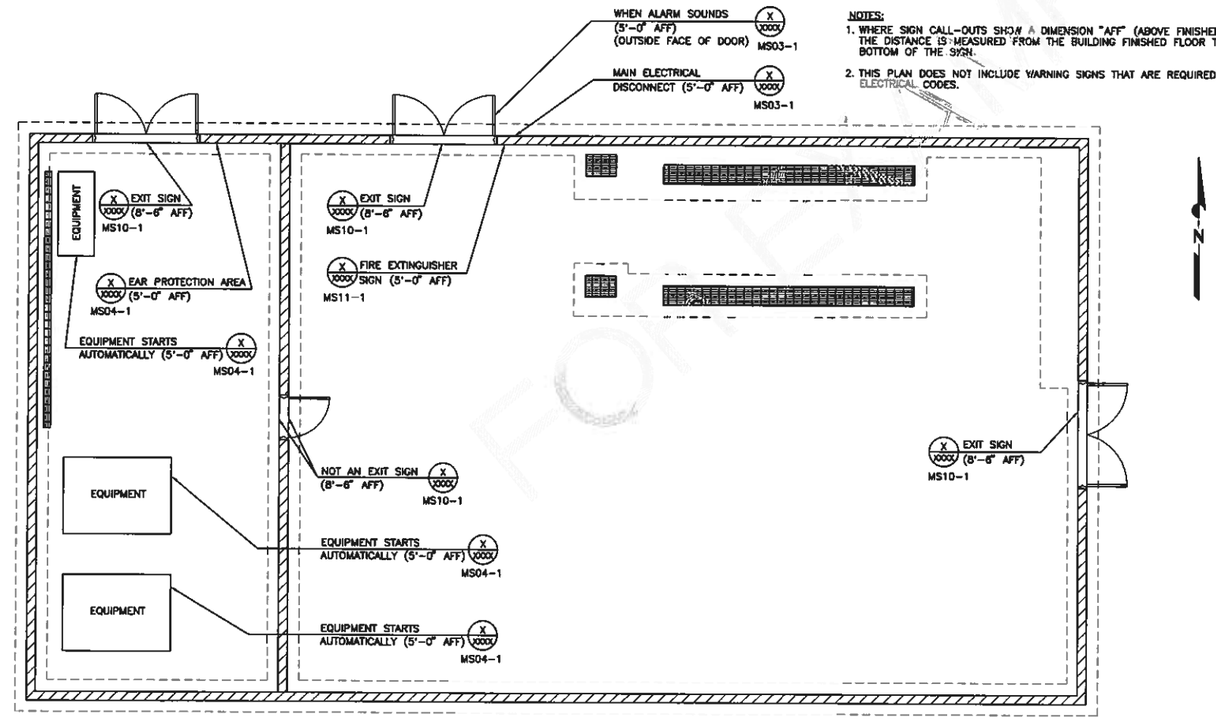

ELECTRICAL BUILDING SIGNAGE PLAN

SCALE: X" = X'-X"

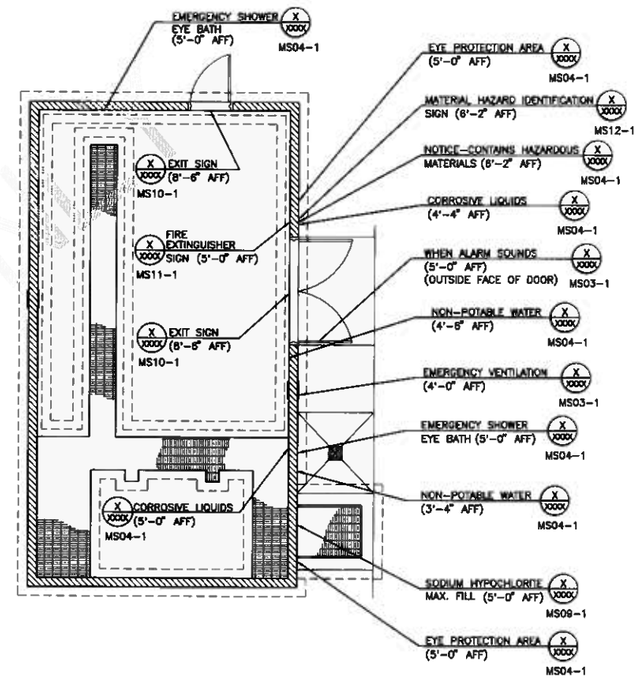

DISINFECTION BUILDING SIGNAGE PLAN

SCALE: X" = X'-X"

GENERAL NOTES FOR SAFETY AND COMPLIANCE SIGNS:

MS02-1

1. INDOOR SIGNS SHALL BE MADE OF RIGID POLYETHYLENE PLASTIC .055" THICK WITH 4 EACH 3/16" DIA MOUNTING HOLES.
2. OUTDOOR SIGNS SHALL BE MADE OF ALUMINUM .040" THICK WITH 3/16" DIA HOLES, OR STEEL 18 GAUGE THICK WITH 3/8" DIA HOLES-CENTERED (SEE DETAILS).
3. OUTDOOR STEEL OR ALUMINUM SIGNS SHALL BE SURFACE MOUNTED TO WALLS, DOORS, CABINETS AND STEEL CHANNEL SIGN POSTS (STEEL SIGNS ONLY). ALL SCREW AND BOLTED FASTENERS SHALL BE NON-CORROSIVE.
4. SIGN COATINGS SHALL BE BAKED ENAMEL AND VANDAL-RESISTANT. COLORS SHALL BE IN ACCORDANCE WITH ANSI STANDARDS OR AS APPROVED BY THE ENGINEER.
5. ALL SIGNS SHALL BE INSTALLED PLUMB AND LEVEL.
6. AN ADDITIONAL SIGN POST IS REQUIRED FOR SIGNS GREATER THAN 20 INCHES IN WIDTH.

FOR EXAMPLE ONLY

NOTES:

1. THE CONTENTS OF THIS DRAWING WERE CREATED TO PROVIDE A GRAPHIC REPRESENTATION OF LVVWD AUTOCAD STANDARD REQUIREMENTS AND EXPECTATIONS FOR SAFETY SIGNAGE LOCATION PLANS OF FACILITIES SITES, ASSOCIATED BUILDINGS AND UNDERGROUND VAULT STRUCTURES.
2. ALL TYPES OF INFORMATION ON THIS DRAWING ARE REQUIRED TO BE PROVIDED AS SHOWN FOR THE PROJECT SUBMITTAL TO BE ACCEPTED AND APPROVED (TYP).

MS14-1 120109

LAS VEGAS VALLEY WATER DISTRICT

SPACE FOR CONSULTANT LOGO, NAME AND ADDRESS

VERIFY SCALE

1/2 0 1/2 1

BAR REPRESENTS ONE AND ONE-HALF INCHES ON ORIGINAL

EXAMPLE CONTRACT FOR AUTOCAD STANDARDS

SAFETY AND COMPLIANCE LOCATION PLANS FOR FACILITIES SITES AND BUILDINGS

SCALE AS NOTED

DRAWN BY: XX/XX/XX

CHECKED BY: XX/XX/XX

RECOMMENDED BY: DATE

ACCEPTED BY: DATE

ENGINEER'S STAMP

CONTRACT NUMBER CXXXX

DRAWING NUMBER XXX

SHEET XX OF XXX

REVISIONS: